ARM-A-DOR®
SECURE PANIC HARDWARE

A103-002 & A103-004 Alarm Accessory Kits

ASSEMBLY INSTRUCTIONS

Alarm Accessory Kits A103-002 and A103-004 provide a remote switch for connecting existing alarm systems, magnetic contacts, and similar devices to the ARM-A-DOR. The kits can be used with either non-alarmed assemblies A101-001 and A102-001 or alarmed assemblies A101-002 and A102-002. Accessory Kits A103-002 and A103-004 are identical; A103-002 is packed individually and A103-004 is packed ten to a box. Each kit contains the items listed in the following table.

ITEM	DESCRIPTION	QUANTITY
1	Switch	1
2	Screws — #2-56 X .50 inch long	2
3	Cable Tie	1
4	Switch Actuator	1
5	Flat Washer — #2	2

ASSEMBLY STEPS

NOTE: On alarmed models, disarm the alarm prior to beginning Step 1 of installation.

1. For models built before March 12, 2001, remove the four screws and the end cap at the end of the unit closest to the hinge side of the door. Disconnect the battery/end cap assembly from the unit by disconnecting the white connector.

2. Remove the screw holding the mortise cover. Then remove the mortise cover and cylinder retainer. Unscrew and remove the mortise cylinder. Push to slide off the aluminum pad.

3. For models manufactured after March 12, 2001, disconnect the batteries on the push bar. The batteries are located on the opposite end from the mortise cylinder. ***Note that some units may have 1/4-20 hex bolt holding the push bar and push pad together. This bolt must be removed prior to sliding the push pad off of the assembly.***

Check the date of manufacture on the white label inside the push bar. If the unit was manufactured before April 21, 1997, this switch cannot be added to the push bar.

3. Attach the new switch (item 1) to the alarm pad base by placing two flat washers (item 5) between the pad base and the switch. Secure it with two #2-56 X .50 thread forming screws (item 2) in the location shown in Figure 1.

   Note: Figure 1 shows the switch oriented with the key cylinder toward the right side of the unit. If the key cylinder is on the left, the figure will be upside down.

4. Loosen and remove the 1/4" hardware where the push bar attaches to the link arms per Figure 1.

5. Install the new switch actuator (item 4) over the link arm and reinstall the 1/4" mounting hardware and tighten, making sure the lock washer is full depressed.

IMPORTANT

Make sure the actuator arm properly contacts the microswitch arm. The roller on the switch arm should contact the link arm and depress the switch sufficiently to close it when the push bar is in the full <u>OUT</u> position.

6. Connect the external wiring to **C** and **NO** terminals on the switch as shown in Figure 1. This creates an open contact when the push bar is depressed. Tie the wires together with the cable tie (item 3) approximately two inches from the switch. The route the wiring along the link arm and out tube assembly toward the hinged side of the door and to the auxiliary device.

7. Slide the push bar back over the push pad.

CAUTION: Take care when sliding the push bar past the switch, wires, and the actuator arm.

8. Reassemble the cylinder retainer and mortise cylinder that you previously removed.

9. Reassemble the cylinder cover over the cylinder retainer and secure them to the cylinder switch bracket using the original screw.

10. For models manufactured before March 12, 2001, reconnect the two halves of the plastic connector together, making sure you hear a four-beep signal. For models manufactured after March 12, 2001, reconnect the batteries to the battery snaps. No beep signal will be heard at this time. Re-fasten the end cap to the push bar with the original screw, making sure the connector is properly positioned and that all wires are routed correctly and clear of any screw holes or pinch points.

11. Arm the alarm, making sure you hear four beeps. Wait for twenty seconds (for models manufactured before March 12, 2001) for the LED to start blinking red every ten seconds. For models manufactured after March 12, 2001, arm the alarm and the LED will start blinking red every ten seconds. Open the door and make sure the alarm sounds. Turn the alarm off and re-arm it after the door is closed.

IMPORTANT

FIGURE 1

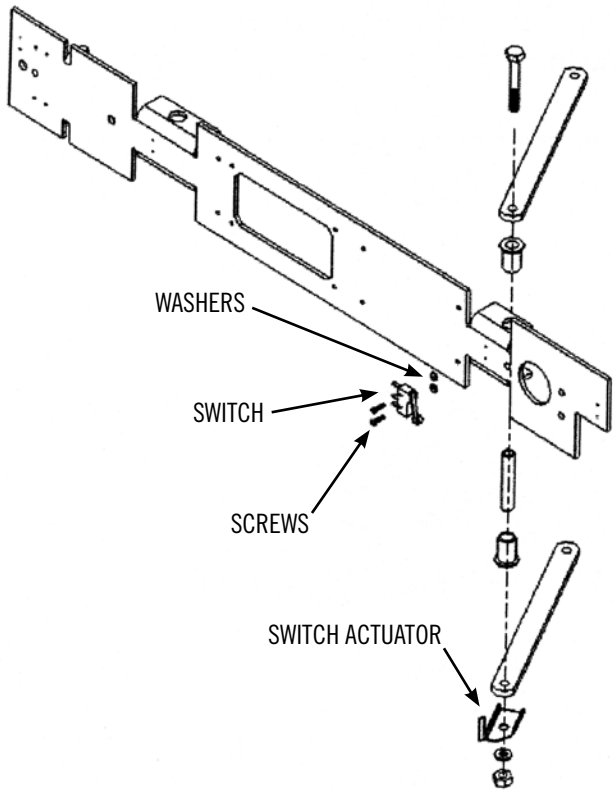

© Sargent & Greenleaf, Inc.

QUESTIONS?

Call the S&G Automated Helpline.

- In the United States and Canada, Call: **800-826-7652, Extension 500.**
- Outside the United States and Canada, Call: **859-885-9416, Extension 500.**

SARGENT AND GREENLEAF®
One Security Drive
Nicholasville, KY 40356, USA.
Phone: 800-847-6750 • Fax: 800-634-4843
Email: armador@sglocks.com
Website: http://www.ARM-A-DOR.com

630-347 (REV. 7/15/2008)