ARM-A-DOR
SECURE PANIC HARDWARE
From Sargent & Greenleaf, Inc.

AC Adapter Kit A107-001
Installation Instructions

The ARM-A-DOR™ AC Adapter Kit (Product #A107-001) can be used only with alarmed models A101-002 and A102-002 manufactured after June 8, 1998. The adapter provides AC power to the alarm and uses battery backup in case of power failure. (Install this kit only on Arm-A-Dor units already installed on a door.)

The AC Adapter Kit A107-001 includes the following:

Item	Part	Qty.
1	Plug-in AC Adapter (18V, 300ma)	1
2	Cable Clamp	1
3	Cable Clips	5
4	Flexible Steel Sleeving	8'
5	Wire Assembly (22 AWG - Red and Black)	10'
6	Wire Sticker	1
7	Bolt ¼-20 x 2.75" long	1
8	AC / BATT Jumper (Shunt)	1
9	Assembly Instructions Sheet	1

Call Sargent & Greenleaf Customer Service at 800-847-6750 if any parts are missing.

Installation

Refer to Figures 1 and 2 as you perform these steps.

1. Remove end cap from push bar and disconnect battery connector. Remove cylinder retainer, cover, and cylinder and slide push bar off unit until screw terminals on alarm board are accessible.
2. Insert black and red wiring (Item 5) into flexible steel sleeve cable (Item 4). Leave 12" of wire exposed at either end of the sleeve cable.
3. Remove existing bolt at the pad base end of the link arm closest to the key cylinder hole. Replace with 2.75" bolt provided (Item 7), and attach the cable clamp (Item 2), and place one end of the flexible steel sleeve cable in clamp. Replace washer and nut and secure.
4. Connect wiring (Item 5) to screw terminals on alarm board. Attach the red wire to either screw terminal and the black wire to the other. Place wiring under wire stickers currently in place. (Extra wire sticker provided if needed, Item 6). See Figure 1.
5. Install the blue jumper (shunt) (Item 8) on the two pins marked "AC / BATT" on the PC board. Recommended installation is with the 3M logo on top. See Figure 2
6. To secure the sleeve cable to the unit use 2 cable clips (Item 3) and attach to the back side of the 1 ½" square tube. Position these so the route of the flexible steel sleeve cable does not interfere with the opening and closing of the unit and will not be pinched.
7. Slide push bar back onto pad base and reinstall cylinder, cylinder retainer, and cylinder cover.
8. Route wiring and sleeving across hinge and up the doorjamb using cable clips (Item 1) provided. Leave service loop for flexing when door is opened and closed.
9. Connect other end of wiring to the AC adapter (Item 1) at screw terminals. Attach the red wire to either terminal and the black wire to the other.

© Sargent & Greenleaf, Inc. 1998

Figure 1: Installation of AC Adapter

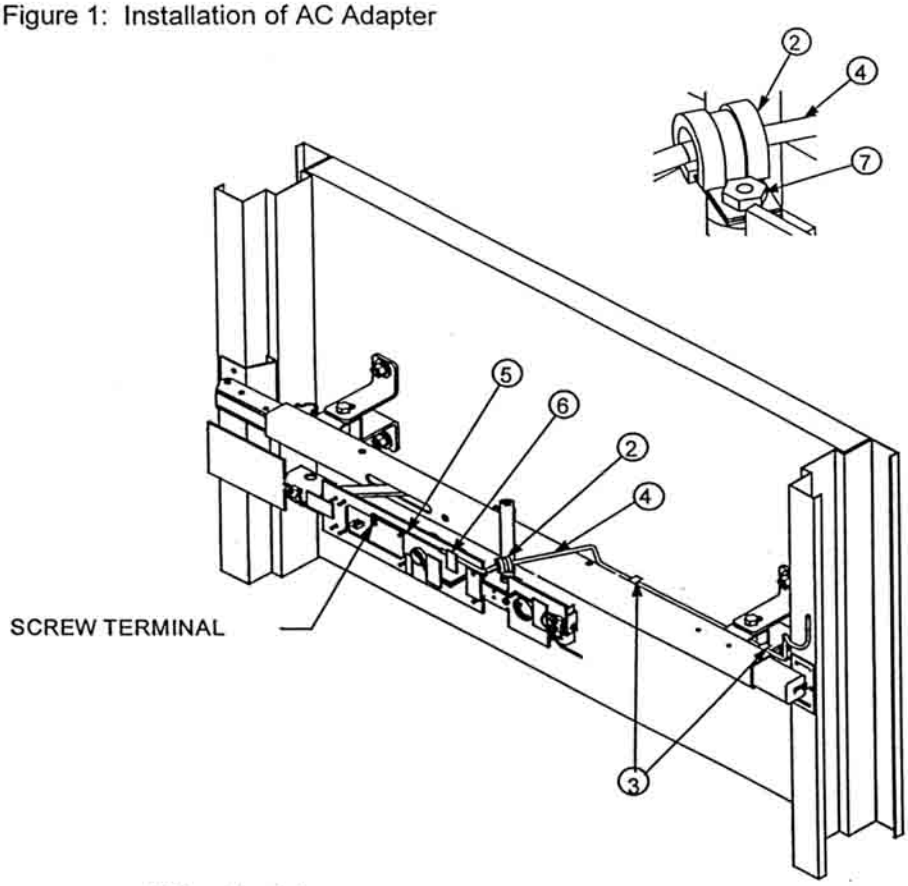

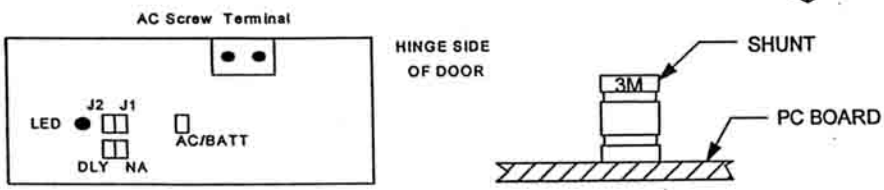

Figure 2: Jumper Locations

Test

1. Plug in adapter to 120 VAC, 60 Hz source and listen for alarm to beep 5 times.
2. Reconnect battery connector and reinstall end cap.
3. To activate the alarm, turn the key to the armed position as indicated on the label and listen for 4 beeps. After approximately 20 seconds, the LED located in the middle of the push bar will start to blink red once every 10 seconds. This indicates your alarm is armed and will sound when the door is opened.

Power Failure Indication: If AC power fails, the alarm gives a power failure indication (two beeps then pause, two beeps then pause) and continues to operate via battery power. Therefore, check the batteries periodically to ensure they still function properly. Simply unplug the transformer and listen for the power failure indication. If the batteries are low, the unit will emit a low volume beep every 10 seconds until they are replaced. See the *ARM-A-DOR™ Owner's Guide* for replacement instructions.

© Sargent & Greenleaf, Inc. 1998