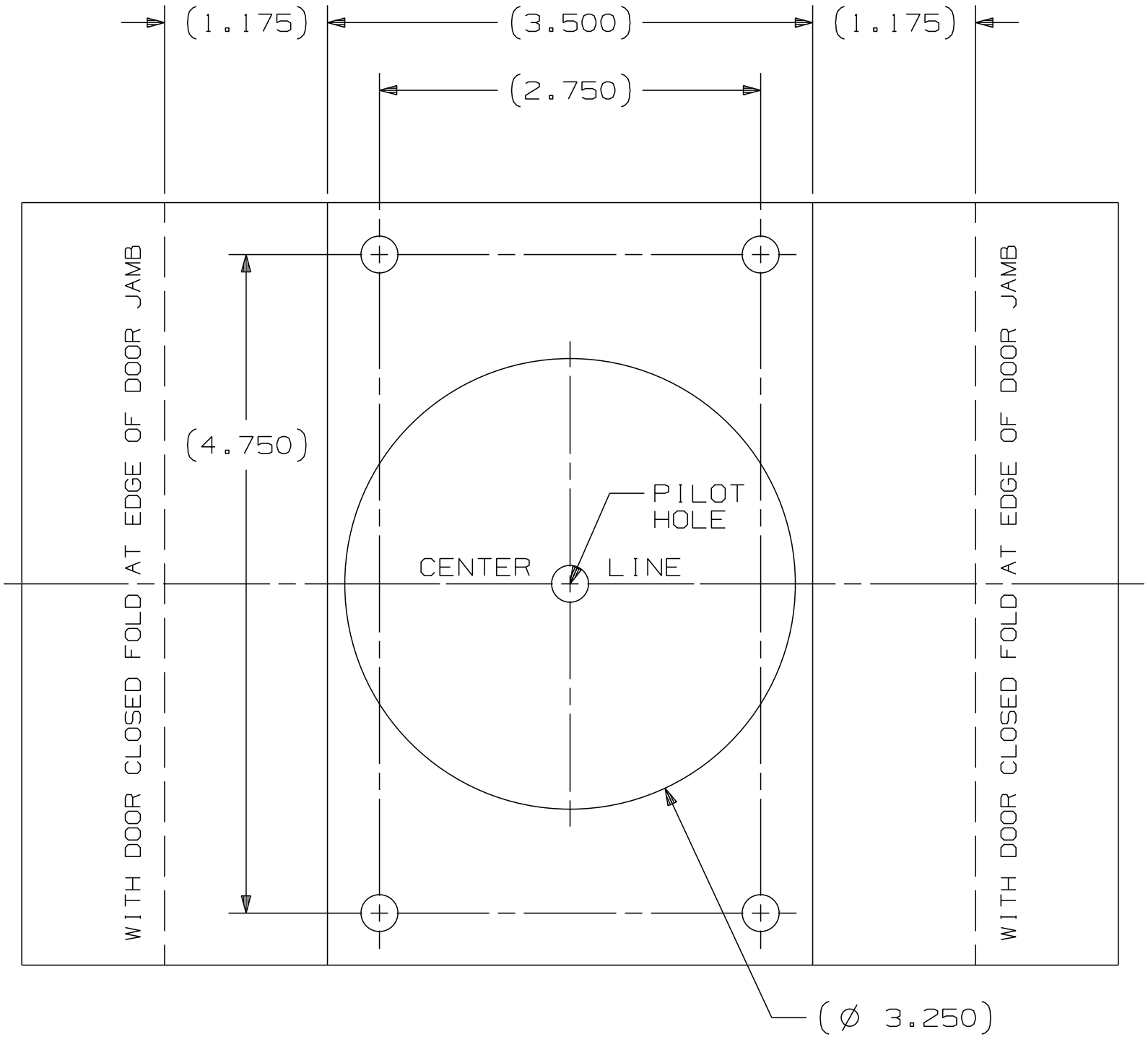

MORTISE KEEPER DRILL TEMPLATE