EHD9000 SPA, SP-9

Surface applied closer super parallel arm mount 180° swing (to clear the hinge)

Installation Instructions

BEST dormakaba Group

OVERVIEW

Surface closer components

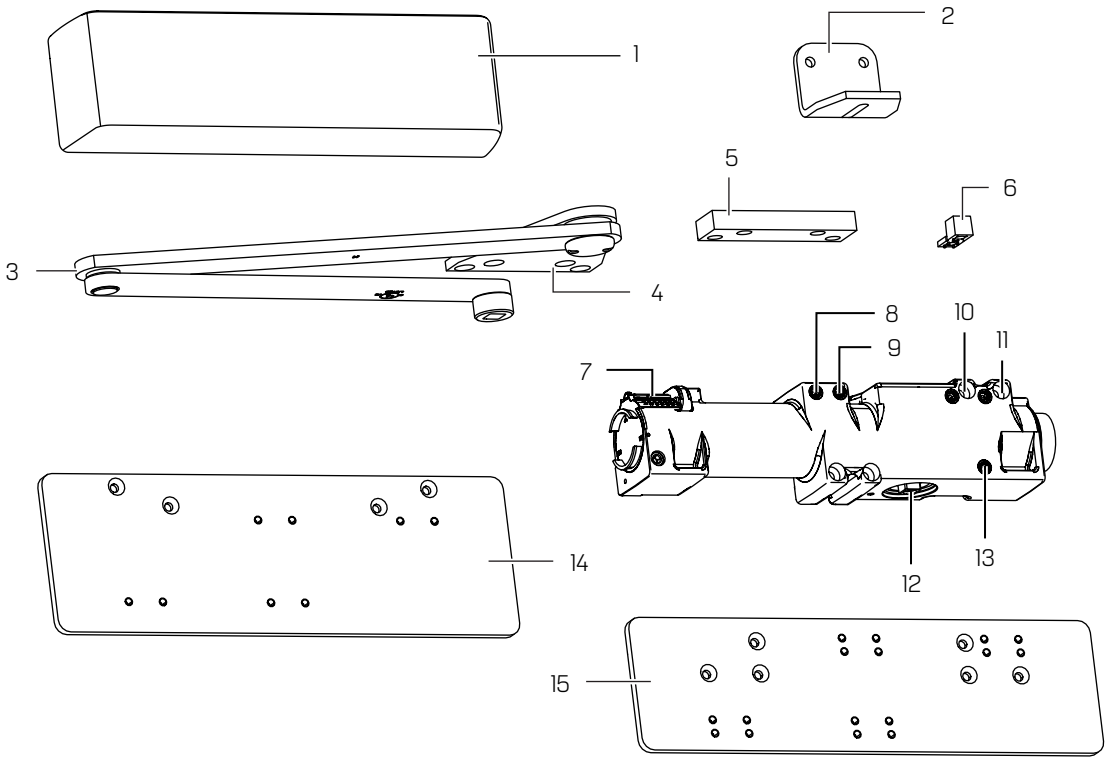

1	Full cover (standard)	6	Spacer block	11	Sweep speed
2	Heavy duty narrow frame bracket (optional)	7	Spring adjustment indicator	12	Pinion
3	Super parallel arm	8	Backcheck	13	Latch speed
4	Soffit plate	9	Advanced variable backcheck	14	Drop plate (optional)
5	Blade stop spacer (optional)	10	Delayed action	15	Backplate (optional)

BEST is a trademark of dormakaba USA Inc. ©2022 All rights reserved.

Table of contents

1	**Technical specifications**	**3**
1.1	Overview	3
1.2	Tools recommended	3
1.3	Handing the door	3
2	**Instructions - parallel mount**	**4**
2.1	Installing drop plate/backplate (optional) and surface closer	4
2.2	Securing soffit plate to frame: spacer block, blade stop spacer, or narrow frame bracket	4
2.3	Securing main and connecting arms to closer	5
3	**Adjustments**	**6**
3.1	Adjusting closing speeds: sweep, latch, backcheck, delayed action	6
3.2	Adjusting spring force	7
4	**Installing covers**	**8**

BEST is a trademark of dormakaba USA Inc. ©2022 All rights reserved.

1 Technical specifications

1.1 Overview

Sex nuts are required for attachment of components to unreinforced doors and to wood or plastic faced composite type fire doors, unless an alternative method is identified in the individual door manufacturer's listings.

Maximum door opening degree is 180°.

Know the swing of the door which is being installed prior to installation.

Verify closer spring size prior to installation.

Make sure door efficiently operates prior to installing closer.

Do not hammer arm onto spindle. Warranty will be void.

Adjust spring size by hand only. Do NOT use a drill or power tools. Warranty will be void.

1.2 Tools recommended

Table 1

Drill bits:	#3 Phillips screwdriver
Metal: 13/64" or #7 drill bit; 1/4-20 tap	3/16" flat head screwdriver
Wood: 5/32" bit	**Hex keys**: 3mm, 5mm, 3/16"
1/2" box wrench	

1.3 Handing the door

Fig. 1

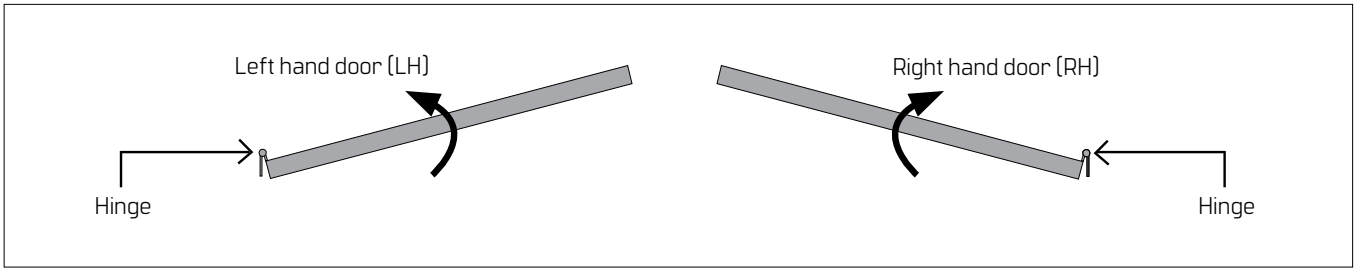

2 Instructions - parallel mount

2.1 Installing drop plate/backplate (optional) and surface closer

Fig.2

For use with metal cover, reference T9 4 7 1 4.
Install metal cover bracket prior to installation of closer body.

Drop plate:

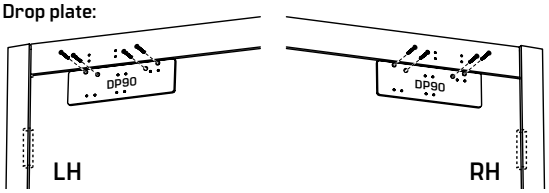

Backplate:

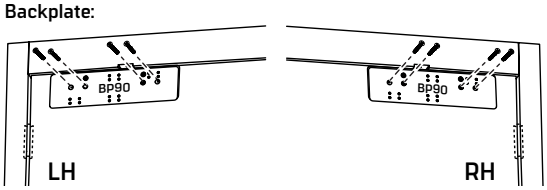

2.1.1 Secure optional drop plate/backplate to door.

2.1.2 Secure closer body to door.

NOTE: Orient closer body so pinion is toward hinge.

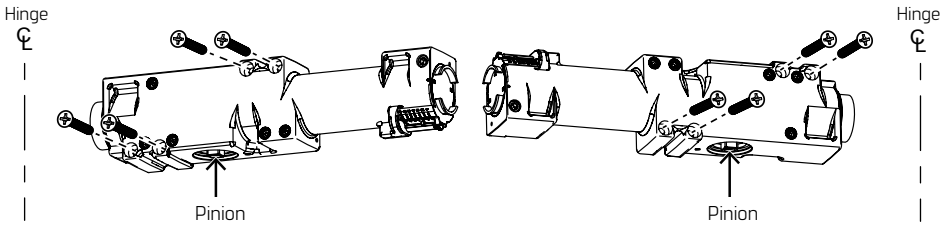

2.2 Securing soffit plate to frame: spacer block, blade stop spacer, or narrow frame bracket

Fig.3

Standard with spacer block

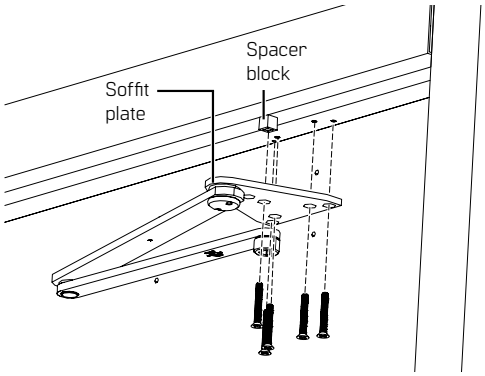

2.2.1 Secure spacer block and soffit plate to frame.

2.2.2 Use included fasteners.

NOTE: Spacer block is 2 dimensional for 1/2" and 5/8" stop heights. Rotate block accordingly.

With blade stop spacer (optional) (BSHD)

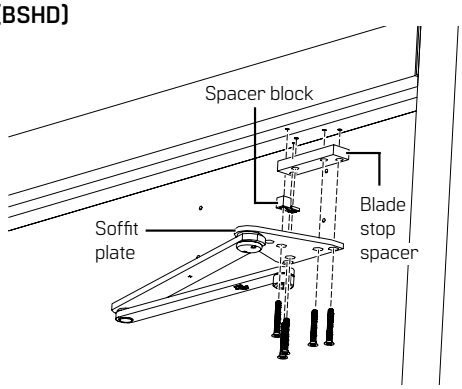

2.2.3 Secure blade stop spacer, spacer block, and soffit plate to frame.

2.2.4 Use included fasteners.

2.2.5 Install spacer block using 1/2" height.

With heavy duty narrow frame bracket (optional) (NFHD)

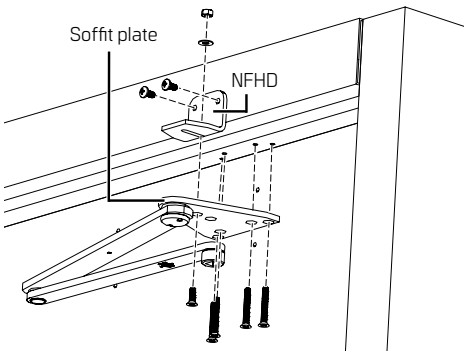

NOTE: If frame width is 4-1/2" or less, NFHD bracket should be used.

2.2.6 Secure NFHD bracket and soffit plate to frame.

2.2.7 Use included fasteners.

BEST is a trademark of dormakaba USA Inc. ©2022 All rights reserved.

2.3 Securing main and connecting arms to closer

Fig.4

Do not hammer arm onto spindle. Warranty will be void.

2.3.1 Preload arm by placing wrench on bottom pinion.

View from top of door

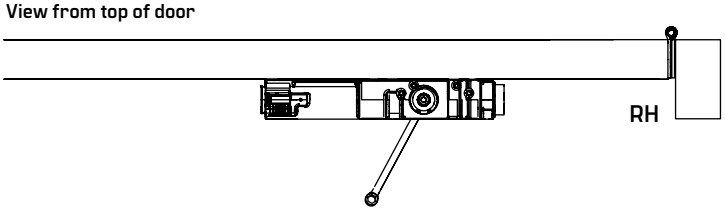

2.3.2 Rotate wrench 45° TOWARD hinge edge of door.

View from top of door

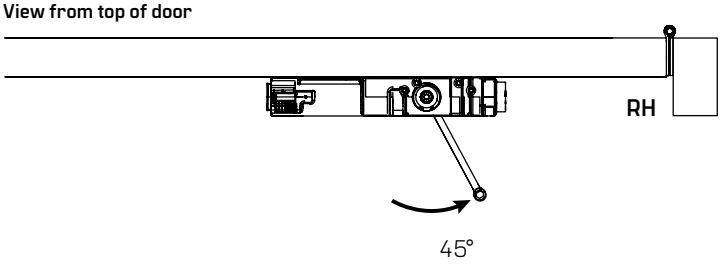

2.3.3 With main arm parallel to door, place main arm on top pinion.

View from top of door

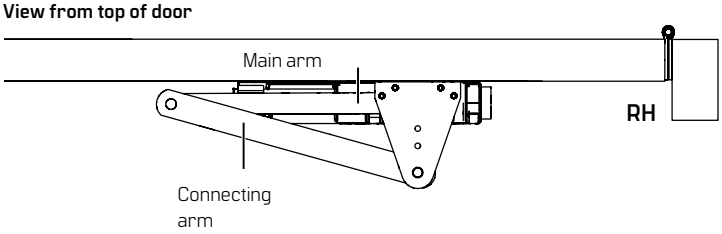

2.3.4 Secure arm to closer with pinion screw.

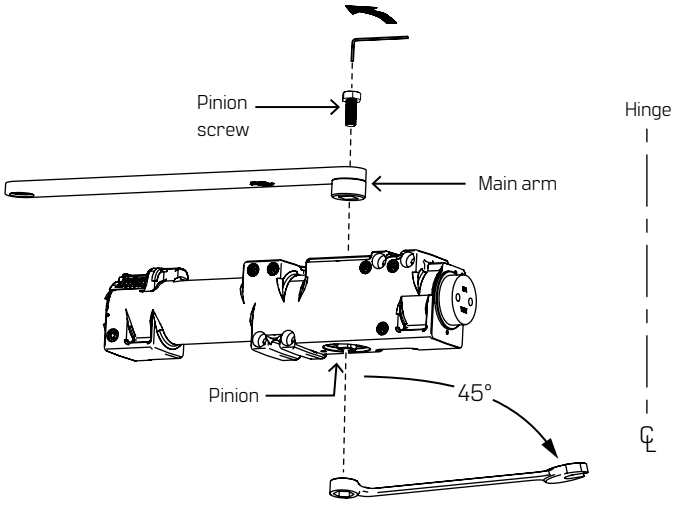

BEST is a trademark of dormakaba USA Inc. ®2022 All rights reserved.

3 Adjustments

Confirm closer spring size prior to making any closing speed adjustments.

Do not back valve heads out beyond closer casting.

Maximum opening angle is 180°.

Door should close in 5 to 7 seconds from 90°.

Do not close valves completely.

3.1 Adjusting closing speeds: sweep, latch, backcheck, delayed action

Fig.5

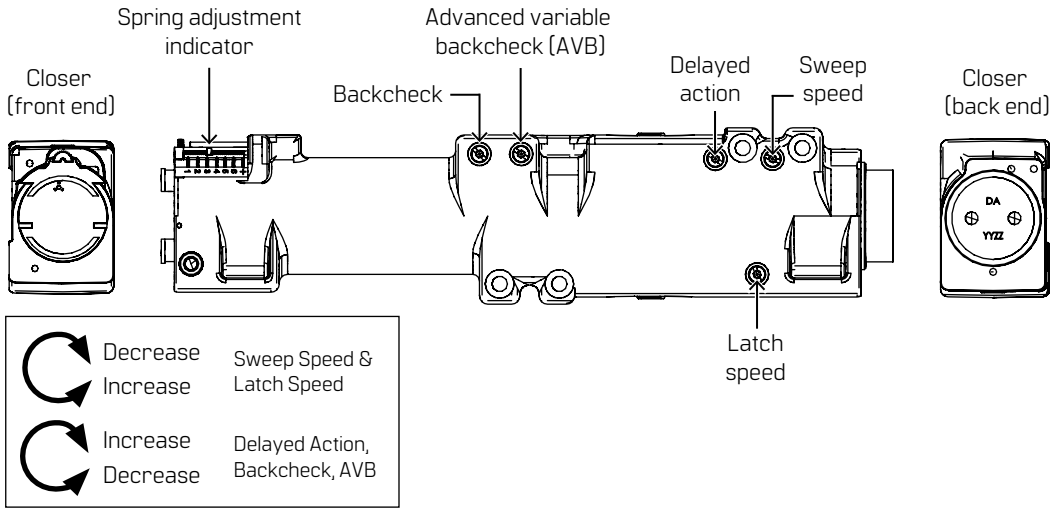

3.1.1 Adjust **closing sweep speed**: 90° to start of latch speed.
- Increase sweep speed: Turn valve counter-clockwise.
- Decrease sweep speed: Turn valve clockwise.

3.1.2 Adjust **closing latch speed:** 15° to close.
- Increase latch speed: Turn valve counter-clockwise.
- Decrease latch speed: Turn valve clockwise.

3.1.3 Adjust **opening backcheck:** beginning at 80°.
- Increase resistance: Turn valve clockwise.
- Decrease resistance: Turn valve counter-clockwise.

3.1.4 Adjust **closing delayed action:** angle 180° to 60°.
- Increase delayed action: Turn valve clockwise.
- Decrease delayed action: Turn valve counter-clockwise.

BEST is a trademark of dormakaba USA Inc. ©2022 All rights reserved.

3.2 Adjusting spring force

Fig.6

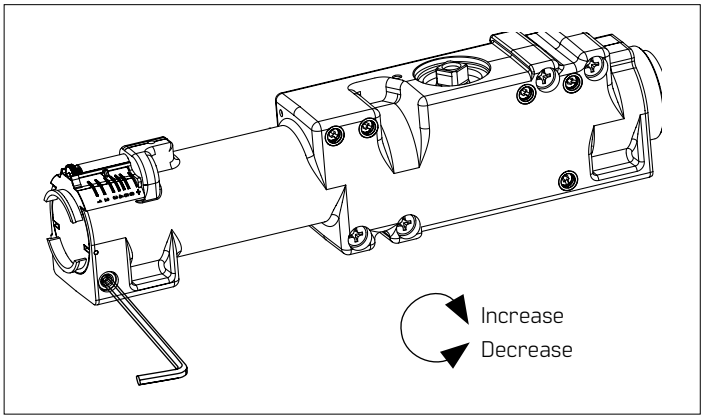

Adjust spring size by hand only.
Do NOT use a drill or power tools.
Warranty will be void.

NOTICE: EHD9016 is adjustable size 1 through 6. Supplied with a size 3.

NOTE: Barrier free openings:
Take an opening force reading from the pull on the door. If required, adjust the spring force to meet the barrier-free requirement. Depending on opening conditions, a door adjusted to meet barrier-free forces may not have sufficient power to reliably close and latch the door.

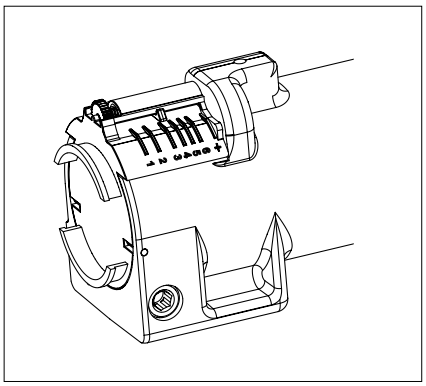

Parallel mount					
	Closer size	Max door weight (lbs)	Door width		Full turns
			Interior	Exterior	
EHD9016	1	50	2'6"	----	-55
	2	80	3'	2'6"	-30
	3	100	3'6"	3'	0
	4	125	3'	2'6"	+19
	5	150	3'6"	3'	+37
	6	200	4'	3'6"	+52
	6+	200	----	4'	+70

BEST is a trademark of dormakaba USA Inc. ®2022 All rights reserved.

4 Installing covers

Fig.7

4.1.1 Place tab in cover slot, opposite main arm.

4.1.2 Place cover over closer and snap into place.

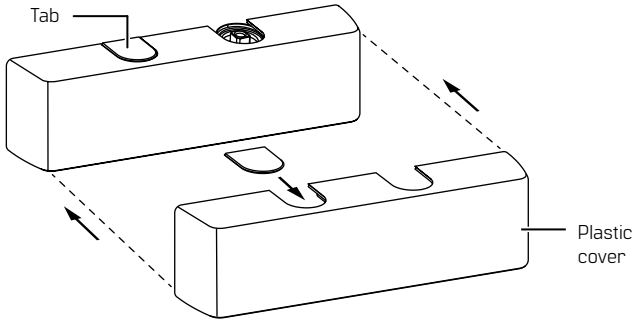

For online instructions visit:
https://dhwsupport.dormakaba.com/hc/en-us
For assistance or warranty information:
Call 1-800-392-5209 or visit
https://dhwsupport.dormakaba.com/hc/en-us

BEST is a trademark of dormakaba USA Inc. ©2022 All rights reserved.