EHD9000 AF90P x PFT

Parallel arm mount with parallel flush transom bracket and optional drop plate (DP90)

Installation Instructions

BEST dormakaba Group

OVERVIEW

Surface closer components

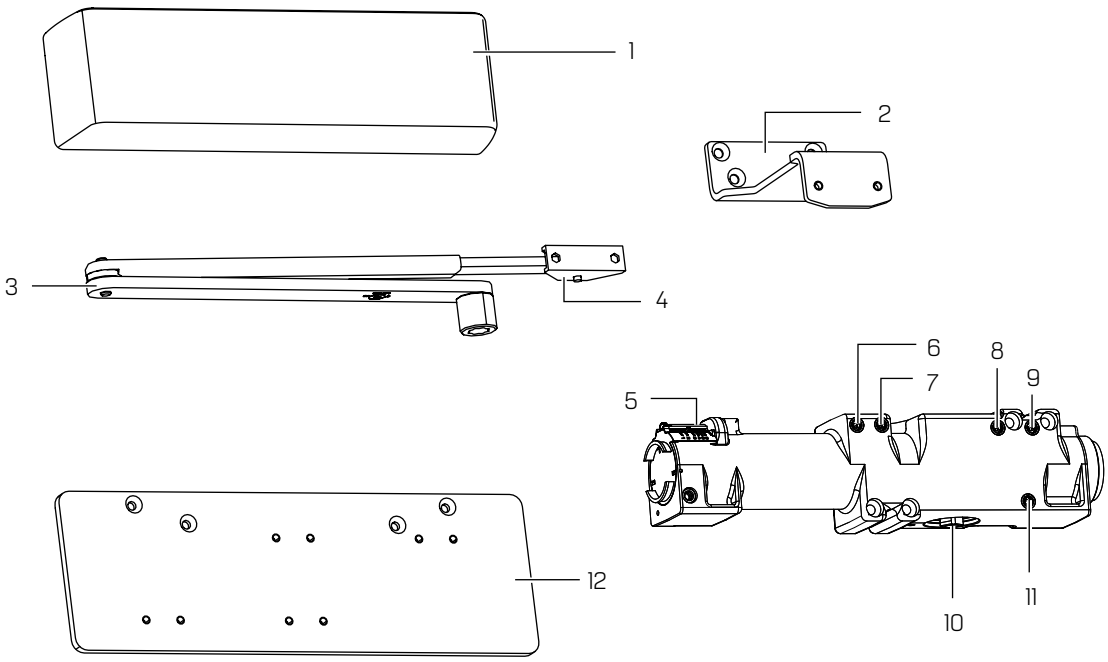

1	Full cover (standard)	5	Spring adjustment indicator	9	Sweep speed
2	Parallel flush transom bracket	6	Backcheck	10	Pinion
3	Flat form arm	7	Advanced variable backcheck	11	Latch speed
4	Arm shoe	8	Delayed action	12	Drop plate (optional)

BEST is a trademark of dormakaba USA Inc. ©2023 All rights reserved.

Table of contents

1	**Technical specifications**	**3**
1.1	Overview	3
1.2	Tools recommended	3
1.3	Handing the door	3
2	**Instructions - parallel mount**	**4**
2.1	Installing drop plate (optional) and surface closer	4
2.2	Installing parallel flush transom bracket	4
2.3	Installing and securing connecting arm	4
2.4	Securing main arm	5
3	**Adjustments**	**6**
3.1	Adjusting closing speeds: sweep, latch, backcheck, delayed action	6
3.2	Adjusting spring force	7
4	**Installing covers**	**8**

BEST is a trademark of dormakaba USA Inc. ©2023 All rights reserved.

1 Technical specifications

1.1 Overview

Sex nuts are required for attachment of components to unreinforced doors and to wood or plastic faced composite type fire doors, unless an alternative method is identified in the individual door manufacturer's listings.

Maximum door opening degree is 180°.

Know the swing of the door which is being installed prior to installation.

Verify closer spring size prior to installation.

Make sure door efficiently operates prior to installing closer.

Do not hammer arm onto spindle. Warranty will be void.

Adjust spring size by hand only. Do NOT use a drill or power tools. Warranty will be void.

1.2 Tools recommended

Table 1

Drill bits:	#3 Phillips screwdriver
Metal: 13/64" or #7 drill bit; 1/4-20 tap	3/16" flat head screwdriver
Wood: 5/32" bit	**Hex keys**: 3mm, 5mm, 3/16"
1/2" box wrench	

1.3 Handing the door

Fig. 1

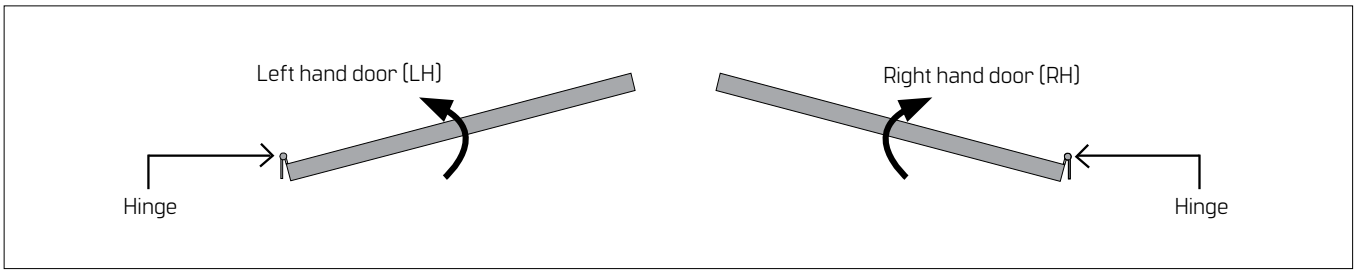

BEST is a trademark of dormakaba USA Inc. ©2023 All rights reserved.

2 Instructions - parallel mount

2.1 Installing drop plate (optional) and surface closer

Fig. 2

If using **METAL COVER,** reference T9 4 7 1 4.
Install metal cover bracket **PRIOR TO** installation of closer body.

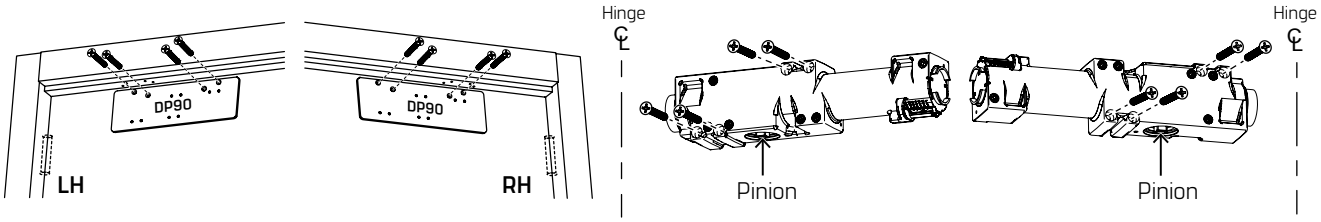

2.1.1 Reference template T9 5 1 8 8 and T9 5 1 8 9.
2.1.2 Secure drop plate (optional).
2.1.3 Secure closer body to door.
NOTE: Orient closer body so pinion is toward hinge.

2.2 Installing parallel flush transom bracket

Fig. 3

2.2.1 Secure parallel flush transom bracket with included fasteners.

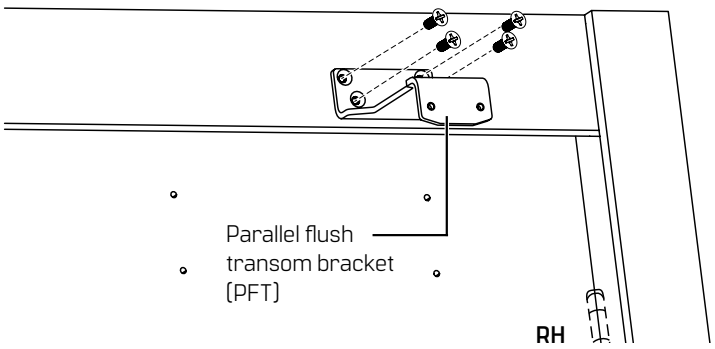

2.3 Installing and securing connecting arm

Fig. 4

Do not hammer arm onto spindle. Warranty will be void.

2.3.1 Slide bar into connecting arm.
2.3.2 Secure with hex bolt.
NOTE: Leave bolt loose.
2.3.3 Secure arm shoe to parallel flush transom bracket.

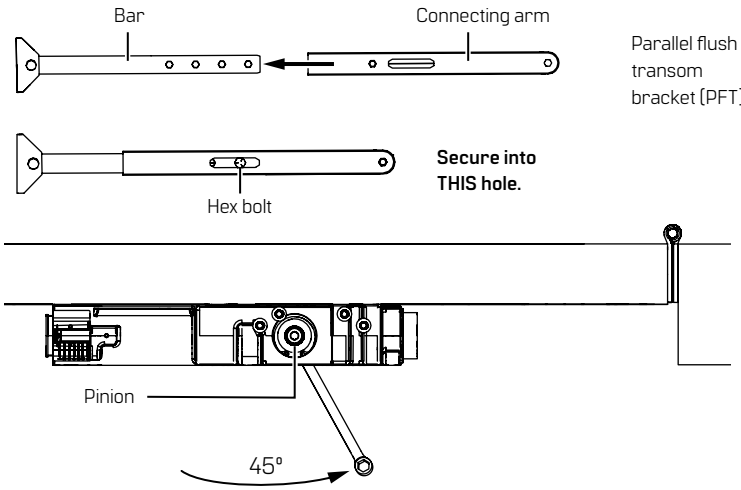

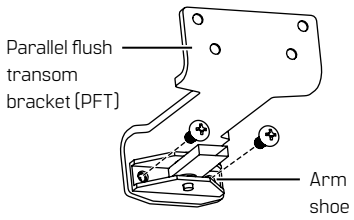

2.3.4 Preload pinion by placing wrench on bottom pinion and rotate pinion 4 5° TOWARD HINGE.

BEST is a trademark of dormakaba USA Inc. ©2023 All rights reserved.

2.4 Securing main arm

Fig.5

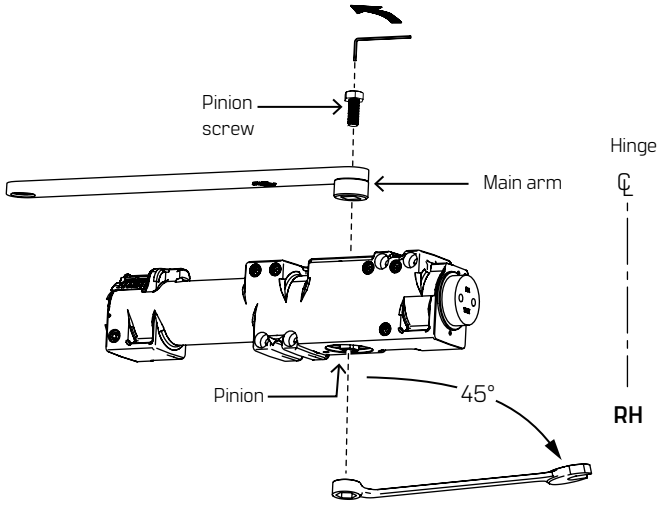

2.4.1 With main arm parallel to door, place main arm onto top of pinion.

2.4.2 Secure with pinion screw and 5mm hex key.

2.4.3 With door closed, adjust connecting arm length until main arm is parallel to door.

NOTE: Main arm should NOT touch door.

2.4.4 Tighten connecting arm hex bolt securely using 1/2" wrench.

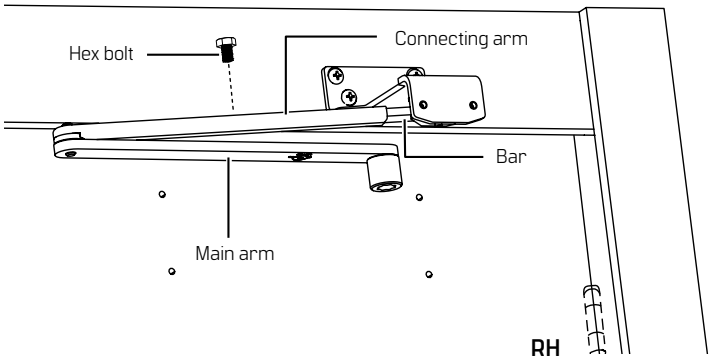

BEST is a trademark of dormakaba USA Inc. ©2023 All rights reserved.

3 Adjustments

Confirm closer spring size prior to making any closing speed adjustments.

Do not back valve heads out beyond closer casting.

Maximum opening angle is 180°.

Door should close in 5 to 7 seconds from 90°.

Do not close valves completely.

3.1 Adjusting closing speeds: sweep, latch, backcheck, delayed action

Fig.6

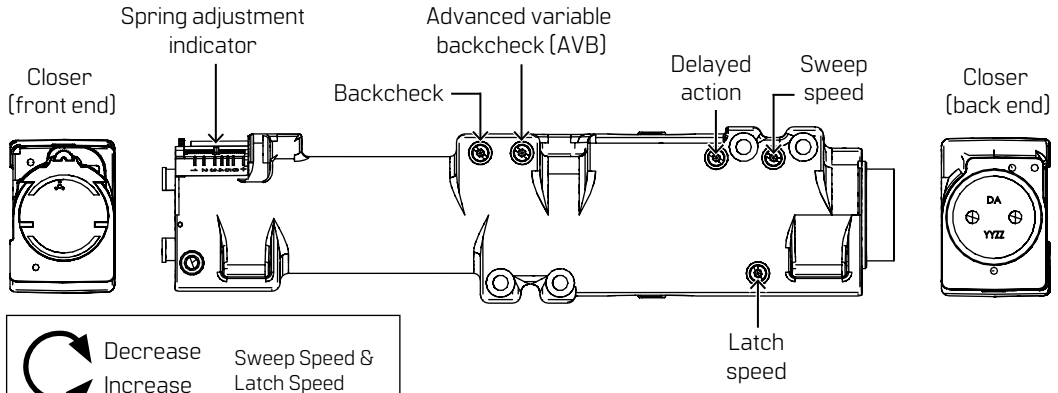

3.1.1 Adjust **closing sweep speed**: 90° to start of latch speed.
- Increase sweep speed: Turn valve counter-clockwise.
- Decrease sweep speed: Turn valve clockwise.

3.1.2 Adjust **closing latch speed:** 15° to close.
- Increase latch speed: Turn valve counter-clockwise.
- Decrease latch speed: Turn valve clockwise.

3.1.3 Adjust **opening backcheck:** beginning at 80°.
- Increase resistance: Turn valve clockwise.
- Decrease resistance: Turn valve counter-clockwise.

3.1.4 Adjust **closing delayed action:** angle 180° to 60°..
- Increase delayed action: Turn valve clockwise.
- Decrease delayed action: Turn valve counter-clockwise.

BEST is a trademark of dormakaba USA Inc. ®2023 All rights reserved.

3.2 Adjusting spring force

Fig.7

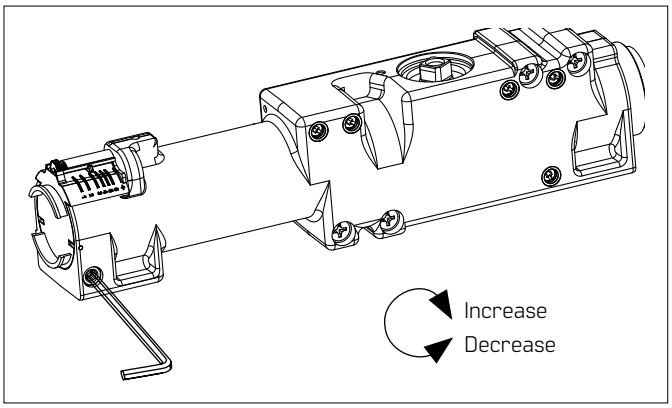

Adjust spring size by hand only.
Do NOT use a drill or power tools.
Warranty will be void.

NOTICE: EHD9016 is adjustable size 1 through 6.
Supplied with a size 3.

NOTE: Barrier free openings:
Take an opening force reading from the pull on the door. If required, adjust the spring force to meet the barrier-free requirement. Depending on opening conditions, a door adjusted to meet barrier-free forces may not have sufficient power to reliably close and latch the door.

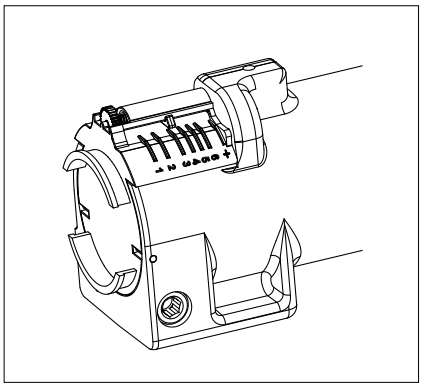

Parallel mount					
	Closer size	Max door weight (lbs)	Door width		Full turns
			Interior	Exterior	
EHD9016	1	50	2'6"	----	-55
	2	80	3'	2'6"	-30
	3	100	3'6"	3'	0
	4	125	3'	2'6"	+19
	5	150	3'6"	3'	+37
	6	200	4'	3'6"	+52
	6+	200	----	4'	+70

BEST is a trademark of dormakaba USA Inc. ®2023 All rights reserved.

4 Installing covers

Fig.8

4.1.1 Place tab in cover slot, opposite main arm.

4.1.2 Place cover over closer and snap into place.

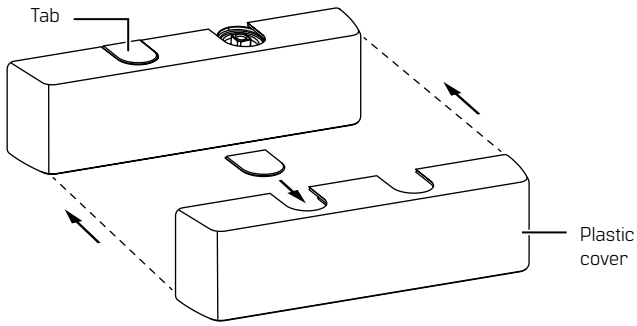

For Complete Online Instructions Visit:
https://dhwsupport.dormakaba.com/hc/en-us
For assistance or warranty information:
Call 1-800-392-5209 or visit
https://dhwsupport.dormakaba.com/hc/en-us

English

Para ver las instrucciones en línea, visite:
https://dhwsupport.dormakaba.com/hc/en-us
Para recibir asistencia o información sobre la garantía:
Llame al 1-800-392-5209 o visite
https://dhwsupport.dormakaba.com/hc/en-us

Español

Pour obtenir des instructions complètes en ligne, consultez le site :
https://dhwsupport.dormakaba.com/hc/en-us
Pour obtenir de l'aide ou des renseignements sur la garantie :
Composez le 1-800-392-5209 ou rendez-vous sur le site
https://dhwsupport.dormakaba.com/hc/fr-ca

Français

BEST is a trademark of dormakaba USA Inc. ©2023 All rights reserved.