EHD9000 FT/FTH

Push side flush transom track mount
(closer on transom - track on door) and optional backplate (BP90)

Installation Instructions

BEST
dormakaba Group

OVERVIEW

Surface closer components

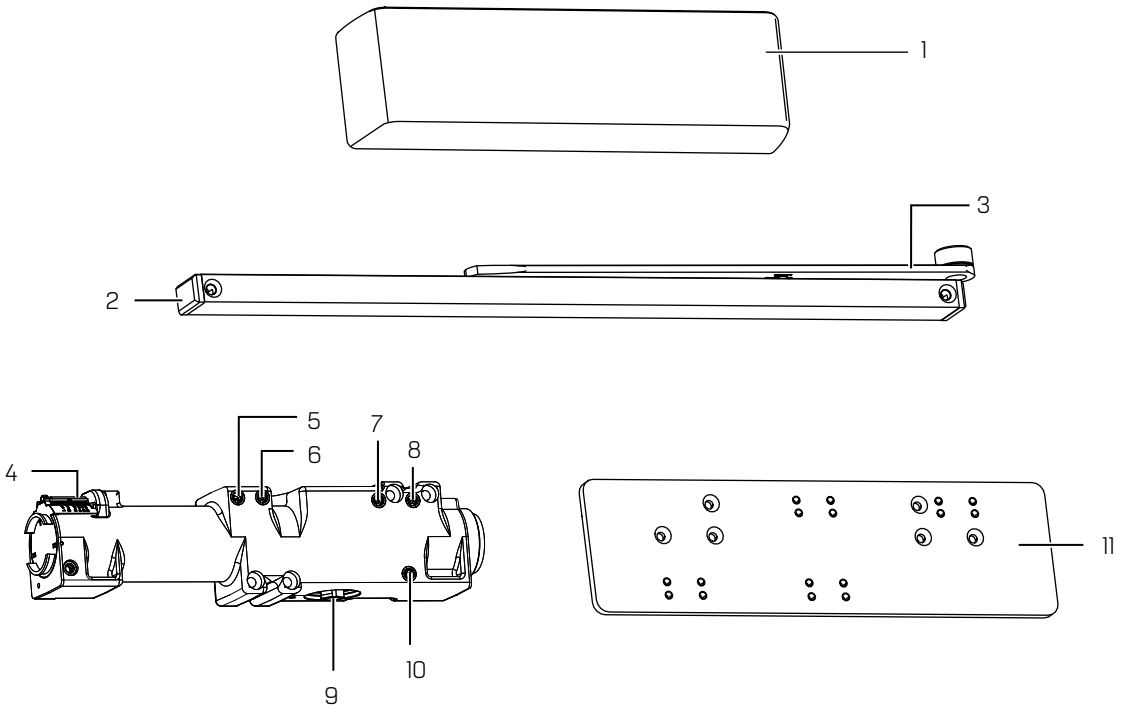

1	Full cover (standard)	5	Backcheck	9	Pinion
2	Track channel	6	Advanced variable backcheck	10	Latch speed
3	Track arm	7	Delayed action	11	Backplate (optional)
4	Spring adjustment indicator	8	Sweep speed		

BEST is a trademark of dormakaba USA Inc. ©2023 All rights reserved.

Table of contents

1	**Technical specifications**	**3**
1.1	Overview	3
1.2	Tools recommended	3
1.3	Handing the door	3
2	**Instructions - flush track mount**	**4**
2.1	Installing backplate (optional) and surface closer	4
2.2	Assembling and securing track	4
2.3	Securing main arm to closer	5
3	**Adjustments**	**6**
3.1	Adjusting closing speeds: sweep, latch, advanced variable backcheck, delayed action	6
3.2	Adjusting hold open (FTH)	6
3.3	Adjusting spring force	7
4	**Installing cover**	**8**

BEST is a trademark of dormakaba USA Inc. ©2023 All rights reserved.

1 Technical specifications

1.1 Overview

- **Sex nuts are required for attachment of components to unreinforced doors and to wood or plastic faced composite type fire doors, unless an alternative method is identified in the individual door manufacturer's listings.**
- **Maximum door opening degree is 125°.**
- **Maximum hold open range is from 125° with optional hold open kit.**
- **Know the swing of the door which is being installed prior to installation.**
- **Verify closer spring size prior to installation.**
- **Make sure door efficiently operates prior to installing closer.**
- **Do not hammer arm onto spindle. Warranty will be void.**
- **Adjust spring size by hand only. Do NOT use a drill or power tools. Warranty will be void.**

1.2 Tools recommended

Table 1

Drill bits:	#3 Phillips screwdriver
Metal: 13/64" or #7 drill bit; 1/4-20 tap	3/16" flat head screwdriver
Wood: 5/32" bit	**Hex keys**: 3mm, 5mm, 3/16"
1/2" box wrench	

1.3 Handing the door

Fig. 1

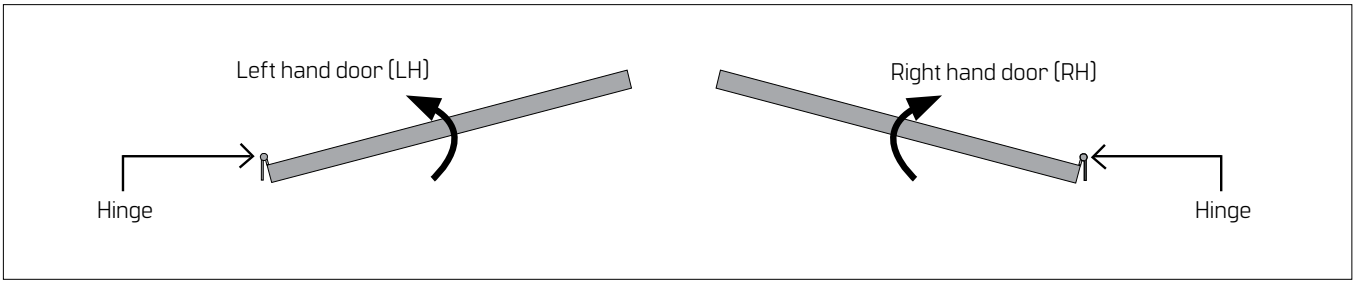

BEST is a trademark of dormakaba USA Inc. ©2023 All rights reserved.

2 Instructions - flush track mount

2.1 Installing backplate (optional) and surface closer

Fig. 1

If using **METAL COVER,** reference T9 4 7 1 4.
Install metal cover bracket **PRIOR TO** installation of closer body.

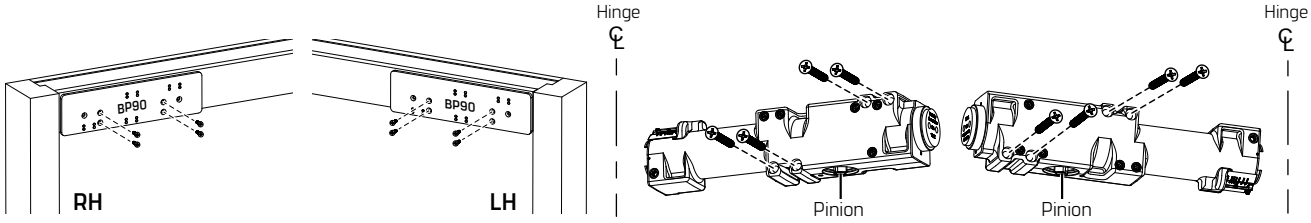

2.1.1 Secure backplate (optional).
2.1.2 Secure closer body to door.

NOTE: Orient closer body so pinion is away from hinge.

2.2 Assembling and securing track

Fig. 2

2.2.1 Attach arm to slide shoe using supplied screw.
2.2.2 Tighten until secure.
2.2.3 Insert slide shoe, rubber stop, hold open mechanism (if necessary), and end blocks into track.
2.2.4 Secure track to door.

NOTE (FTH Units ONLY): Hold open mechanism and slide shoe must be installed with arrows pointing AWAY from door hinges.

NOTE: Mounting screws pass through end blocks.

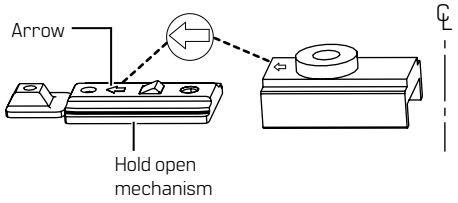

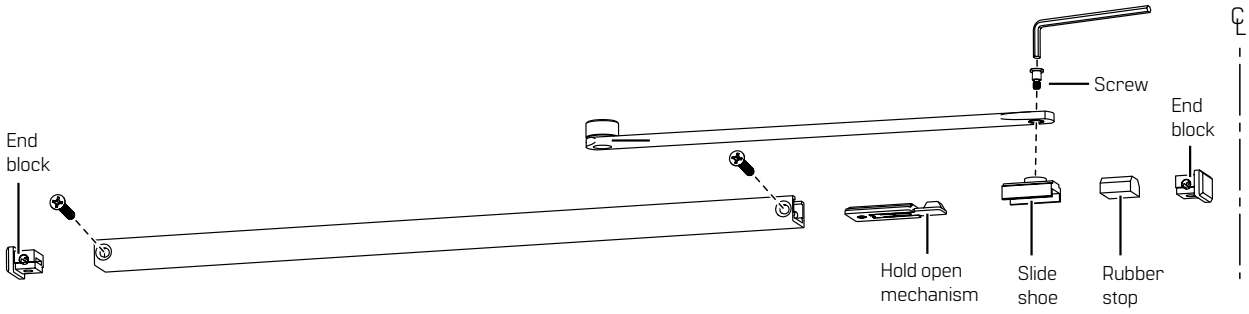

BEST is a trademark of dormakaba USA Inc. ©2023 All rights reserved.

2.3 Securing main arm to closer

Fig.3

Do not hammer arm onto spindle. Warranty will be void.

2.3.1 Preload arm by placing wrench on top pinion.

NOTE: Top pinion is not visible from bottom view of door.

View from bottom of door

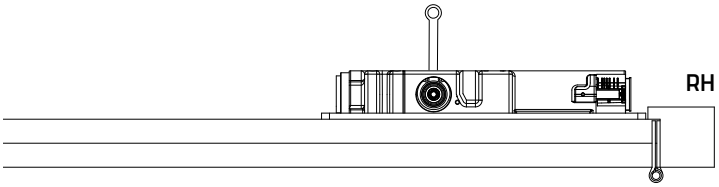

2.3.2 Rotate wrench 45° AWAY from hinge edge of door.

View from bottom of door

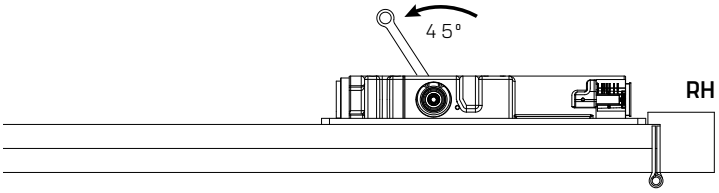

2.3.3 With main arm parallel to door, place main arm onto bottom pinion.

View from bottom of door

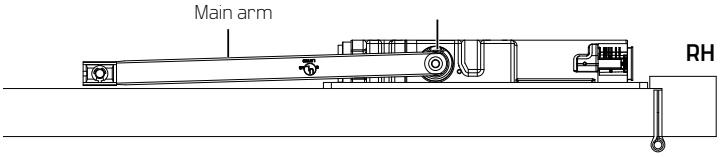

2.3.4 Secure arm to closer with pinion screw.

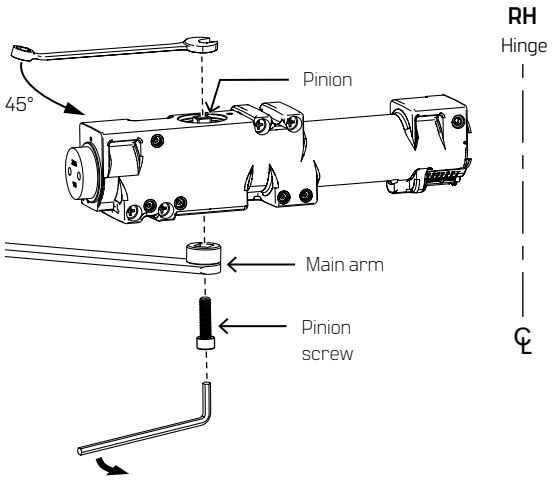

BEST is a trademark of dormakaba USA Inc. ©2023 All rights reserved.

3 Adjustments

Confirm closer spring size prior to making any closing speed adjustments.

Do not back valve heads out beyond closer casting.

Maximum opening angle is 125°.

Door should close in 5 to 7 seconds from 90°.

Do not close valves completely.

3.1 Adjusting closing speeds: sweep, latch, advanced variable backcheck, delayed action

Fig.4

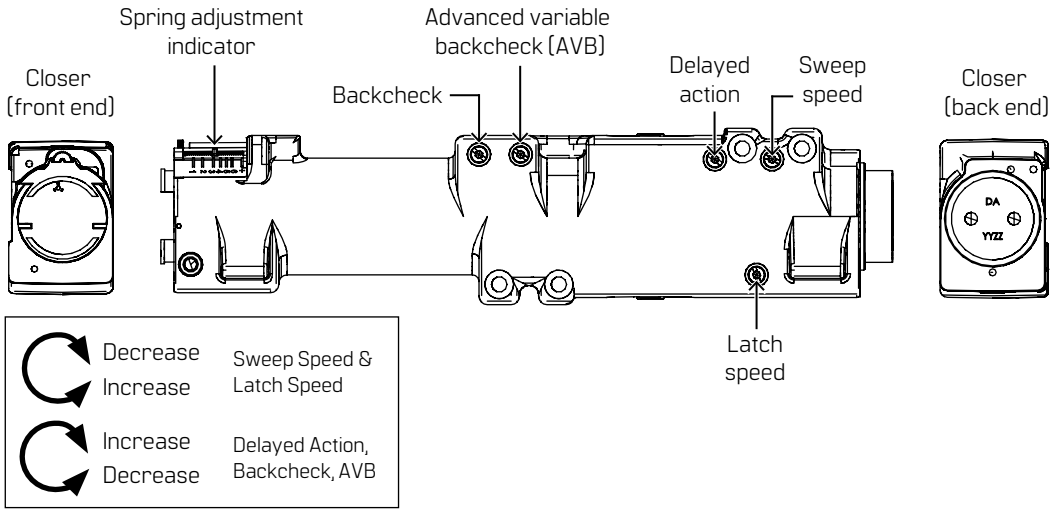

3.1.1 Adjust **closing sweep speed:** 90° to start of latch speed.
- Increase sweep speed: Turn valve counter-clockwise.
- Decrease sweep speed: Turn valve clockwise.

3.1.2 Adjust **closing latch speed:** 15° to close.
- Increase latch speed: Turn valve counter-clockwise.
- Decrease latch speed: Turn valve clockwise.

3.1.3 Adjust **opening backcheck**: beginning at 80°.
- Increase resistance: Turn valve clockwise.
- Decrease resistance: Turn valve counter-clockwise.

3.1.4 Adjust **closing delayed action:** angle 60° to start of sweep.
- Increase delayed action: Turn valve clockwise.
- Decrease delayed action: Turn valve counter-clockwise.

3.2 Adjusting hold open (FTH)

Fig.5

3.2.1 Place the hold open mechanism in desired position and tighten screw.

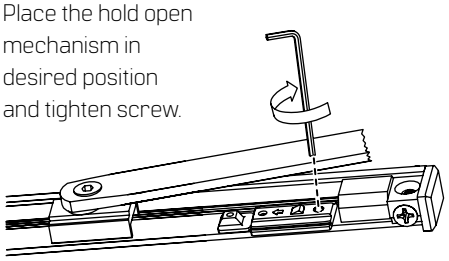

3.2.2 To adjust hold open force:
- **Increase** = turn CW
- **Decrease** = turn CCW

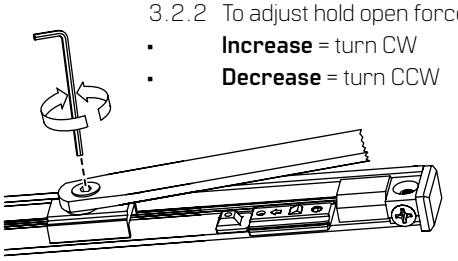

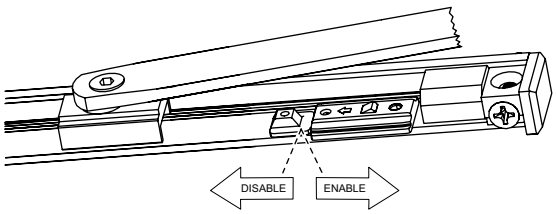

3.2.3 **Enable:** push white slide INTO hold open mechanism.

3.2.4 **Disable:** pull white slide AWAY from hold open mechanism.

BEST is a trademark of dormakaba USA Inc. ©2023 All rights reserved.

3.3 Adjusting spring force

Fig.6

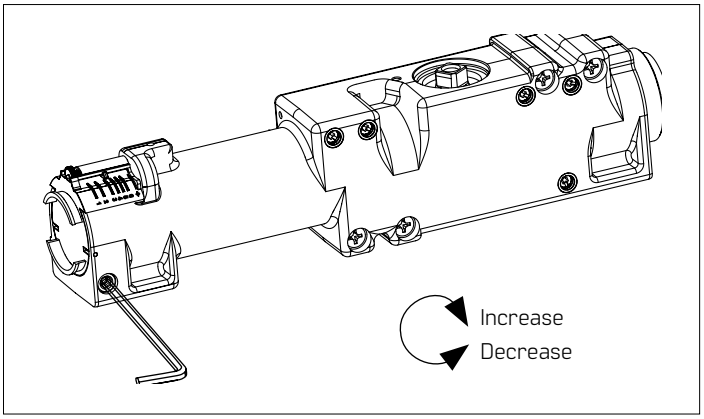

Adjust spring size by hand only.
Do NOT use a drill or power tools.
Warranty will be void.

NOTICE: EHD9016 is adjustable size 1 through 6.
Supplied with a size 3.

NOTE: Barrier free openings:
Take an opening force reading from the pull on the door. If required, adjust the spring force to meet the barrier-free requirement. Depending on opening conditions, a door adjusted to meet barrier-free forces may not have sufficient power to reliably close and latch the door.

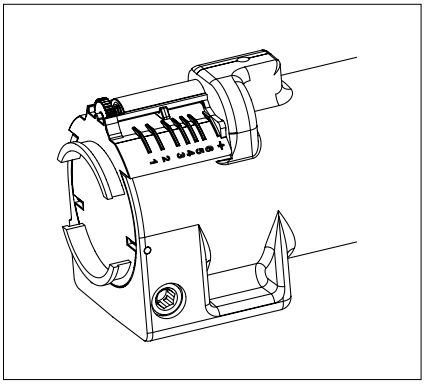

Track mount					
	Closer size	Max door weight (lbs)	Door width		Full turns
			Interior	Exterior	
EHD9016	1	ADA	♿	----	-55
	2	100	2'6"	----	-30
	3	125	3'	2'6"	0
	4	150	3'6"	3'	+19
	5	200	4'	3'6"	+37
	6	250	----	4'	+52
	6+	250	----	4'	+70

BEST is a trademark of dormakaba USA Inc. ©2023 All rights reserved.

4 Installing cover

Fig. 7

4.1.1 Place tab in cover slot, opposite main arm.

4.1.2 Place cover over closer and snap into place.

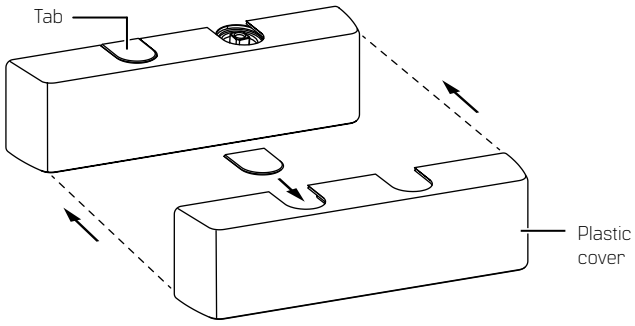

English

For Complete Online Instructions Visit:
https://dhwsupport.dormakaba.com/hc/en-us
For assistance or warranty information:
Call 1-800-392-5209 or visit
https://dhwsupport.dormakaba.com/hc/en-us

Español

Para ver las instrucciones en línea, visite:
https://dhwsupport.dormakaba.com/hc/en-us
Para recibir asistencia o información sobre la garantía:
Llame al 1-800-392-5209 o visite
https://dhwsupport.dormakaba.com/hc/en-us

Français

Pour obtenir des instructions complètes en ligne, consultez le site :
https://dhwsupport.dormakaba.com/hc/en-us
Pour obtenir de l'aide ou des renseignements sur la garantie :
Composez le 1-800-392-5209 ou rendez-vous sur le site
https://dhwsupport.dormakaba.com/hc/fr-ca

BEST is a trademark of dormakaba USA Inc. ©2023 All rights reserved.