dormakaba

EasyAssist Pro/EasyAssist Pro eHO

Mounting instructions

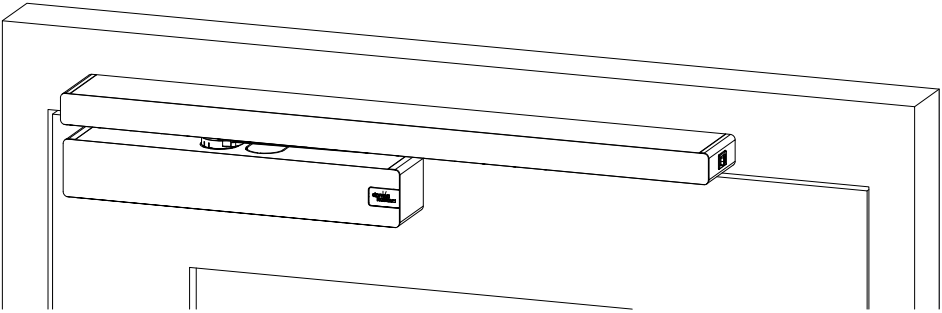

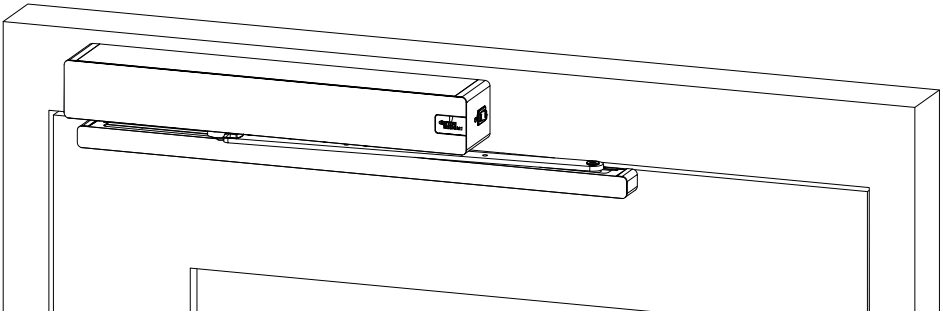

061017 45532 - 10/2026

EN

Table of contents

1	**Information about this document**	**3**
1.1	Contents and purpose	3
1.2	Other applicable documents	3
1.3	Target group	3
1.4	Documents storage	4
1.5	Symbols used	4
1.5.1	Hazard categories	4
1.5.2	Symbols (manual)	4
2	**Mounting**	**5**
2.1	Safety during mounting	5
2.2	Requirements for mounting	6
2.3	Door panel mounting	7
2.3.1	Mounting the mounting plates	7
2.3.2	Mounting the SmartArm	9
2.3.3	Plug in the FFC cable	14
2.3.4	Creating the electrical connection	16
2.3.5	Mounting the Bluetooth board	20
2.4	Lintel mounting	21
2.4.1	Mounting the mounting plates	21
2.4.2	Mounting components on the mounting plate	22
2.4.3	Mounting the IO board	24
2.4.4	Mounting the Bluetooth board	26
2.4.5	Creating the electrical connection	27
2.4.6	Mounting the slide rail lever	30
2.4.7	Mount the slide rail	34
3	**Commissioning**	**36**
3.1	Safety during commissioning	36
3.2	Putting the product into operation	37
3.3	Putting the hold-open system function into operation	46

1 Information about this document

1.1 Contents and purpose

This manual describes how to mount the following products:

- **EasyAssist Pro**
  Power-operated door closer
- **EasyAssist Pro eHO**
  Power-operated door closer with electrical opening

Commissioning, parameterization, operation and troubleshooting are carried out using the "Door Pilot 2" app.
This app can be downloaded via the following link or the adjacent QR code:

https://dk.world/easyassist

This manual must be carefully read through and understood before commencing all work. Complying with all safety instructions and action steps provided in this manual is the basic prerequisite for safe working. The local accident prevention regulations and general safety conditions for the product's scope of application also apply.

The figures serve to provide a general understanding and may differ from the product model that is actually delivered.

1.2 Other applicable documents

- Supplementary sheet with references to the digital documents
- Inspection log for power-operated doors
- Operation manual Door Pilot Interface 2
- Drilling template for marking the fixing holes
- EasyAssist/EasyAssist Pro/EasyAssist Pro eHO operating instructions
- EasyAssist Pro/EasyAssist Pro eHO mounting instructions

1.3 Target group

The product may only be put into operation by a qualified electrician.

1.4 Documents storage

This document and the applicable documents must be handed over to the facility operator. The documents must be kept during the service life of the product and made accessible to staff.

1.5 Symbols used

1.5.1 Hazard categories

⚠ DANGER

Indicates an imminent danger that leads to serious bodily injury or death.

⚠ WARNING

Indicates a potentially dangerous situation that can lead to serious body injuries or death.

⚠ CAUTION

Indicates a potentially dangerous situation that can lead to minor body injuries.

1.5.2 Symbols (manual)

The symbols listed can be found in the manual.

Application tips, useful information

Cross references point to the chapter number in which additional information can be found. Example [▶ 2.2]

Action steps

✓ Requirement

1. Step 1
   ⇨ Intermediate result
2. Step 2

⇨ Result

2 Mounting

2.1 Safety during mounting

⚠ DANGER

Danger of death due to electric current!

Touching live parts may result in death or serious injury from electric shock.

- Work on electrical units must only be carried out by qualified electricians.
- Do not touch live parts or cables.

⚠ DANGER

Danger to life through electric current

There are live parts inside the product.

- Do not insert any metal objects into the openings of the product.

⚠ DANGER

Danger to life through electric current

If the product is mounted on a metal door leaf, there is a risk of the current being transferred to the door leaf.

- Ground door leaf.

⚠ WARNING

Risk of injury due to work executed improperly

Handling the product requires expert knowledge of its properties and functions.

- Have all work carried out by qualified personnel instructed by the facility operator.

⚠ WARNING

Risk of injury due to insufficiently qualified personnel

Insufficiently qualified personnel cannot assess the risks associated with handling the unit, thus putting themselves or others at risk of serious or life-threatening injury. If unqualified personnel work on the unit or stay in the unit's danger zone, this results in dangers that could cause serious injury and considerable property damage.

- All work described in this manual must be carried out by qualified personnel only.
- Keep inadequately qualified personnel away from the danger zones.
- Contact dormakaba in case of any uncertainties.
- Children must not be in the vicinity when work is being carried out on the unit.

⚠ WARNING

Danger of injury from falling objects!

Falling parts or tools can cause injury.

- Secure workplace against unauthorized entry.

⚠ CAUTION

Risk of injury by crushing

On doors with operators there is a risk of crushing and shearing on slide rail levers and arms.

- Inform the door's facility operator of the danger.

NOTICE

Property damage due to too large an opening angle

When mounted on the opposite side to the hinge, the door wing's opening angle must be limited.
To prevent damage to the SmartArm and door, a doorstop must be mounted on the floor or wall.

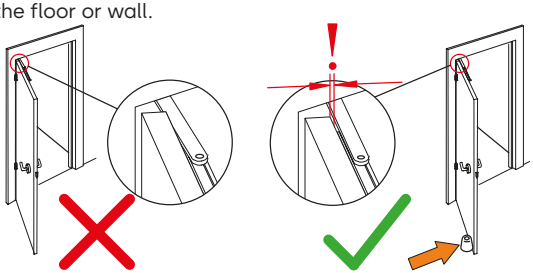

2.2 Requirements for mounting

Electrical requirements

- There is an on-site disconnection device to disconnect all poles from the mains supply.
- The transverse section of the mains power supply is 3 x 1.5 mm².
- The 230 V/50-60 Hz connection is secured with a 16 A fuse.

Mechanical requirement

The door leaf moves smoothly and is in perfect mechanical condition.

2.3 Door panel mounting

2.3.1 Mounting the mounting plates

✓ The door leaf moves smoothly and is in perfect mechanical condition.

✓ The drill hole for the mains connection cables is present.

✓ If external hardware components are to be connected, the corresponding drill hole is provided to feed these cables through.

1. The included drilling template has a red ledge with arrows.
   Position and fix the drilling template for the selected mounting position in accordance with the sketches.

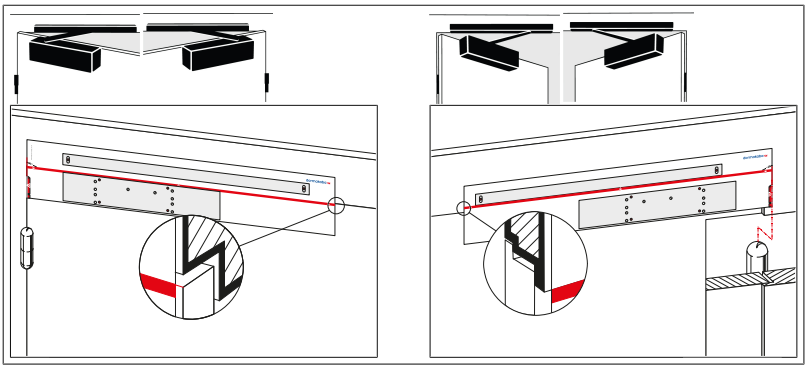

2. Drill the holes according to the drilling template.
3. Mount the mounting plate of the operator on the door leaf.
4. Secure the operator mounting plate on the door leaf and the SmartArm on the panel/lintel with the included Spax 2.5 x 30 mm fixing screws or M5 x 30 mm threaded screws in accordance with the door material and suitable on-site fixing materials (retractable nuts, etc.).
   NOTICE! The requirements of door manufacturers must be observed.

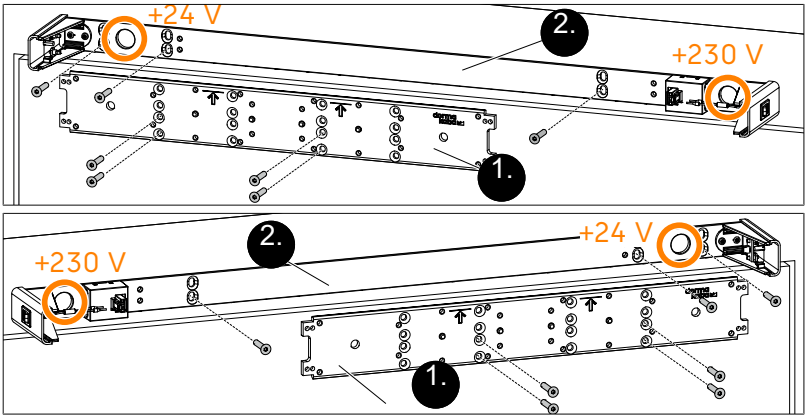

5. Check that the distance between the mounting plate of the operator and the mounting plate of the SmartArm is an even 20.5 mm.

Front view

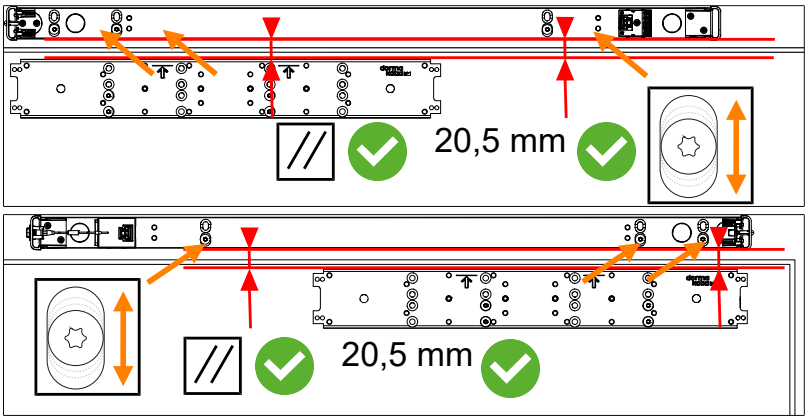

2.3.2 Mounting the SmartArm

2.3.2.1 Hinge side procedure

1. Align the operator and control unit according to the mounting situation and mount on the mounting plate with 8 fixing screws.

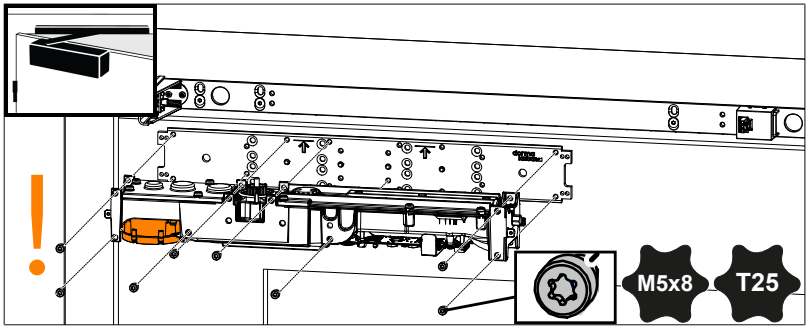

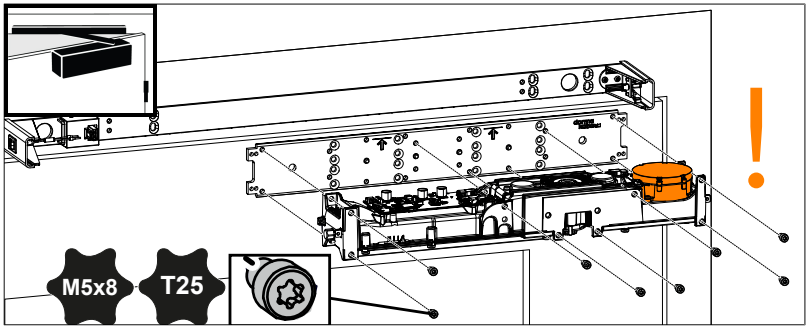

2. Guide the FFC cable forwards out of the SmartArm and place the slide rail lever on the operator, turned by one tooth, so that the slide rail lever points slightly away from the door leaf or towards the assembling technician.
ATTENTION The FFC line must not be shortened.

Top view

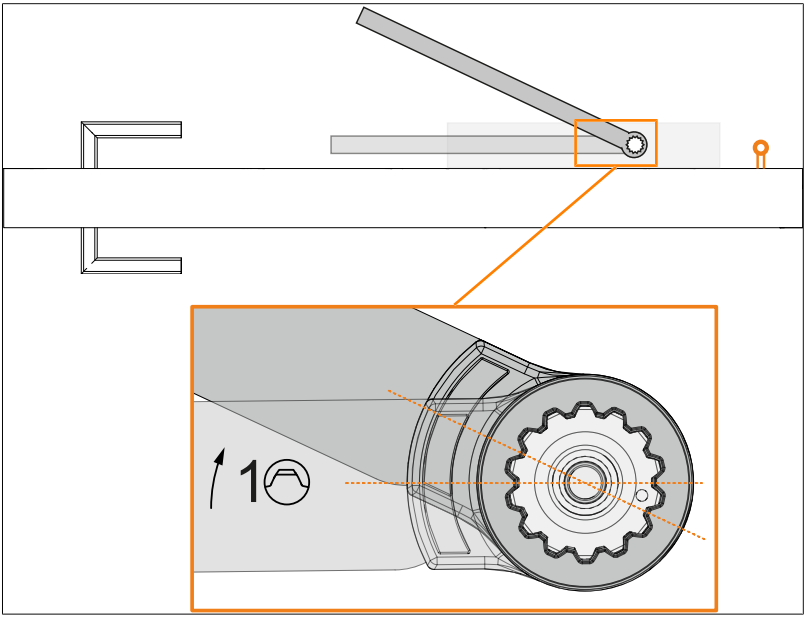

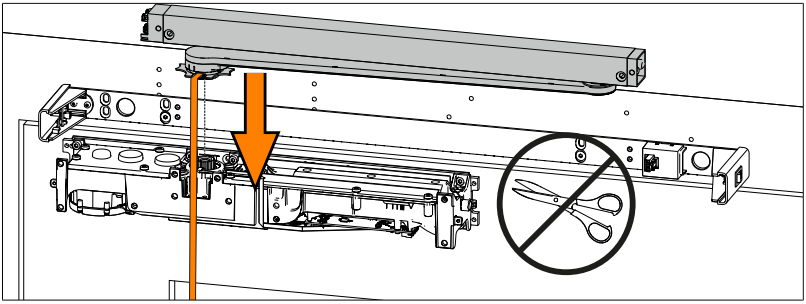

3. Press the slide rail of the Smartarm towards the mounting plate and screw it to the mounting plate.

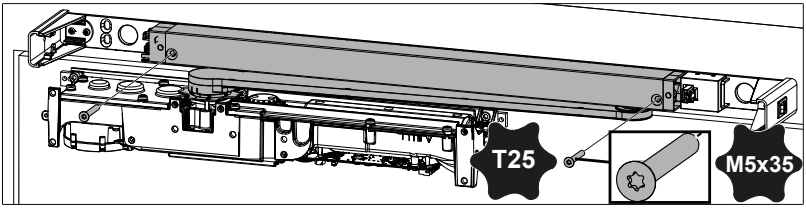

4. Push the output shaft upwards in the direction of the lever until the screw reaches the internal thread of the lever.
   Screw the slide rail lever to the operator with 5.5 Nm.

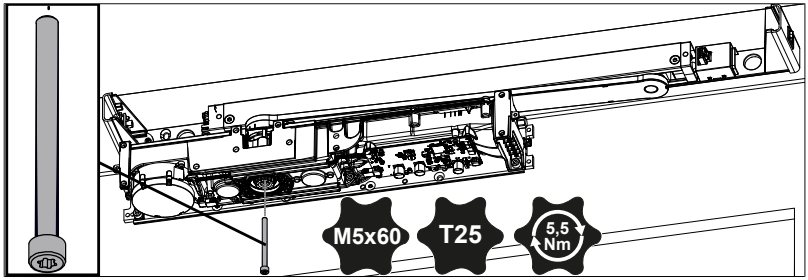

2.3.2.2 Opposite side to the hinge procedure

1. Guide the FFC cable out of the SmartArm to the rear, twist the slide rail lever and place it on the operator so that the slide rail lever points slightly away from the door leaf or towards the assembling technician.
   ATTENTION The FFC line must not be shortened.

Top view

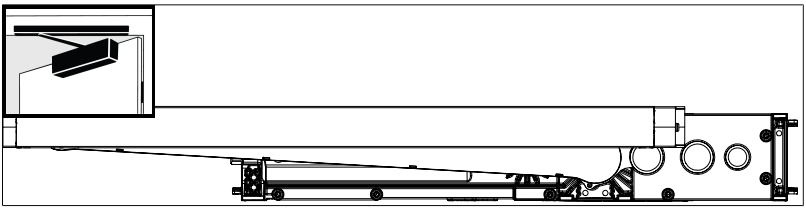

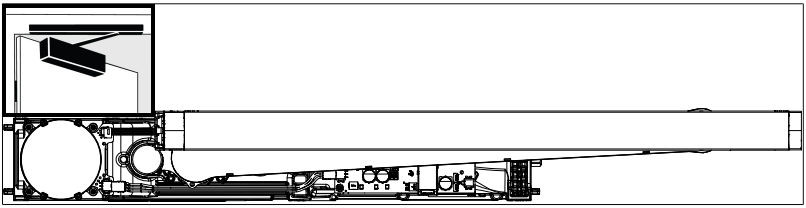

2. Align the operator and control unit with the SmartArm attached to the mounting situation and mount on the mounting plate with 8 fixing screws.

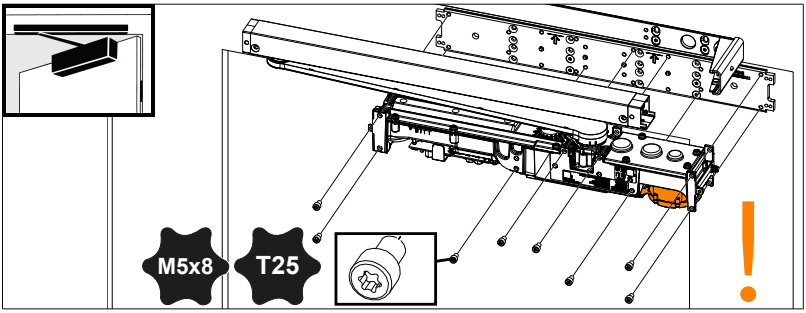

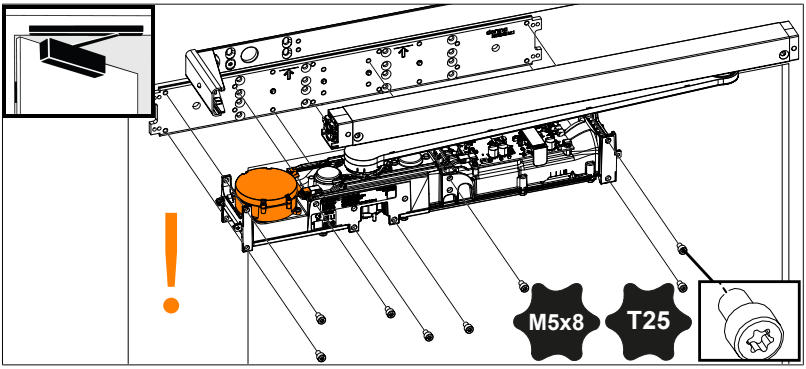

3. Screw the SmartArm to the mounting plate.

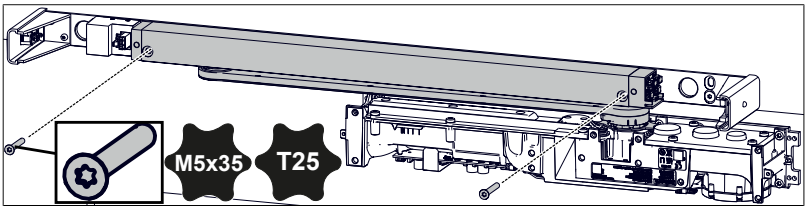

4. Push the output shaft upwards in the direction of the lever until the screw reaches the internal thread of the lever.
   Screw the slide rail lever to the operator with 5.5 Nm.

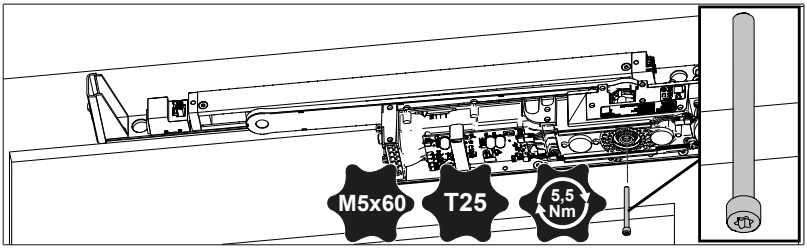

2.3.3 Plug in the FFC cable

1. Lay the FFC cable as shown in the diagram.
2. Plug in the FFC cable, paying attention to the following points:
   - The two connections must be plugged into the appropriate plug on the circuit board, see identification on the connectors and the circuit board.
   - The plastic reinforcements at the end of the FFC lines (shown in blue) must point in the direction of the axle/drive-transmission unit.

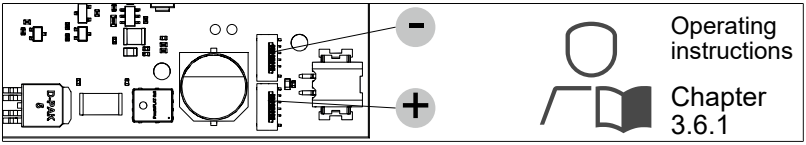

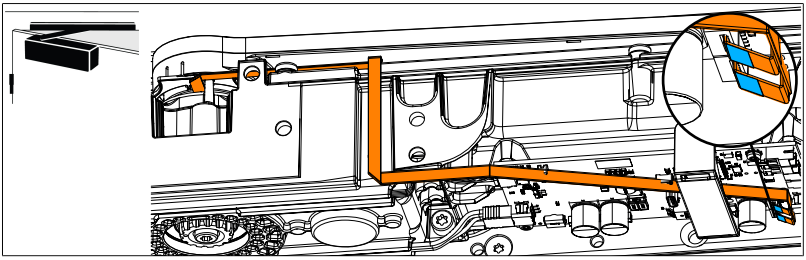

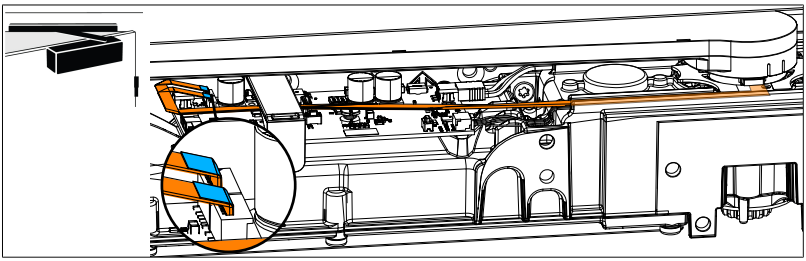

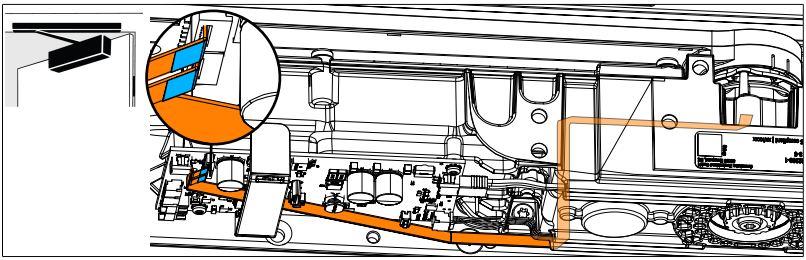

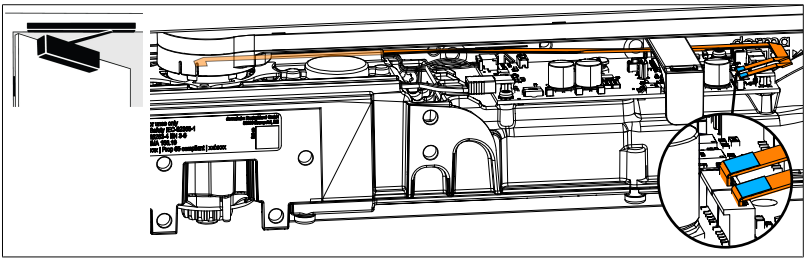

3. Attach the cable clip so that the FFC cable is held in position.

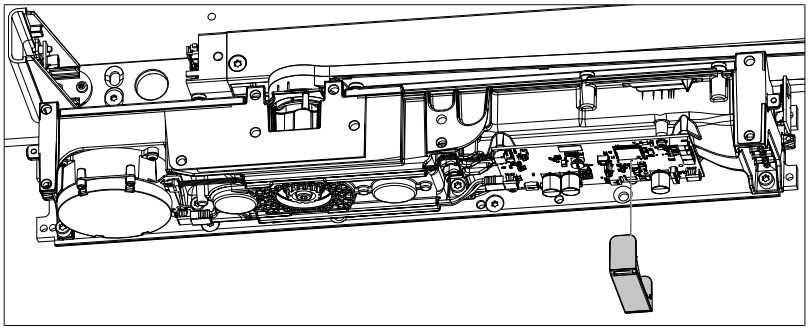

2.3.4 Creating the electrical connection

⚠ DANGER

Risk of death by electrocution

The unit is supplied with 100–240 V AC electrical voltage through the mains connection.

- An on-site cut-off device for all-pole disconnection of the mains connection must be available to ensure safe connection of the unit.

1. Mount the power supply unit on the slide rail.

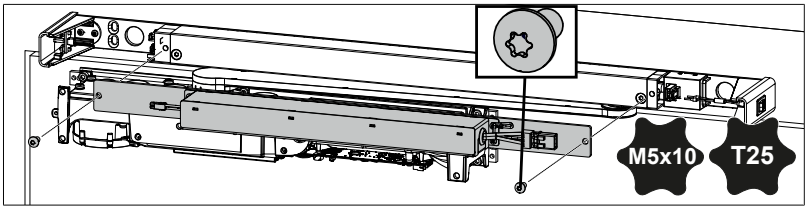

2. Remove the end cap of the slide rail cover without the switch.

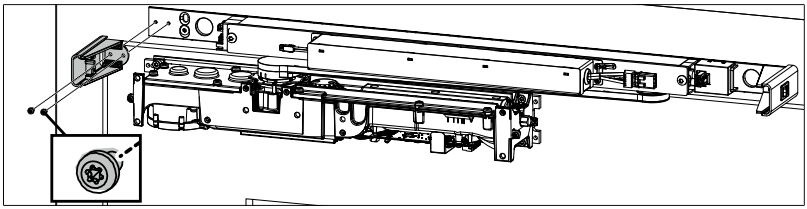

3. Plug the IO board onto the FFC board.

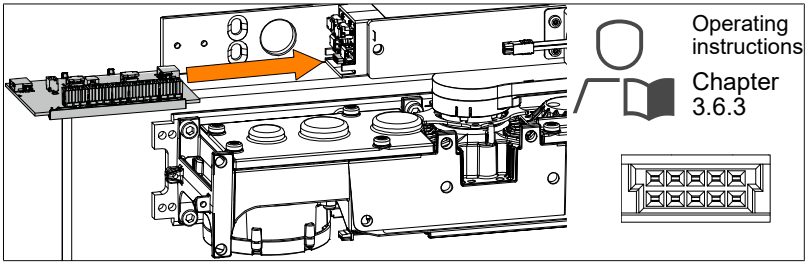

4. Mount the LED board in the end cap.

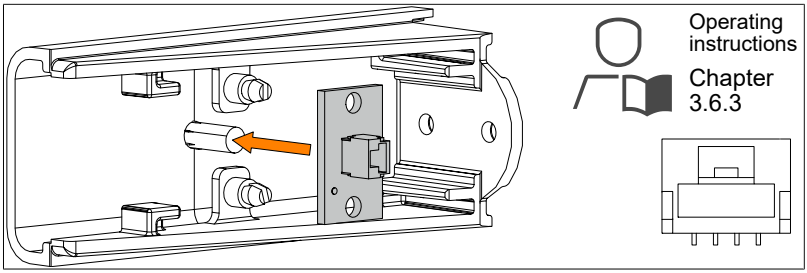

5. Plug the plug of the LED board into the IO board.

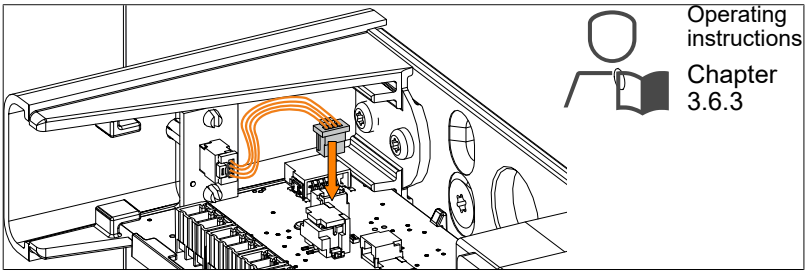

6. Re-mount the end cap of the slide rail cover without the switch.
   ⇨ The IO board is fixed.

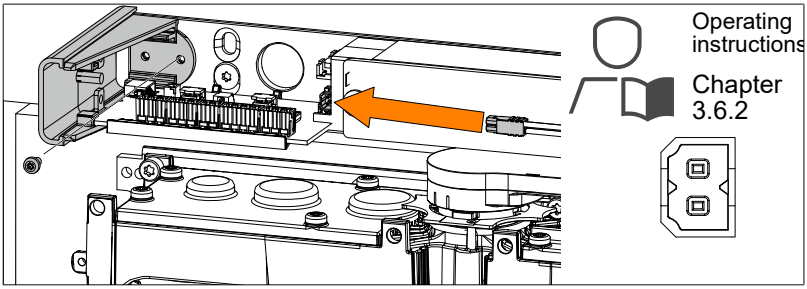

7. Verify that the 230 V/50-60 Hz connection is protected by a 16-A fuse.
   If necessary, protect the connection accordingly.
8. Check that the transverse section of the mains power supply is 3 x 1.5 mm².
9. Disconnect the power supply at the on-site disconnection device to disconnect all poles of the mains power supply.
10. If the mains power supply does not come out of the wall and could therefore be pulled, secure the mains power supply with the strain relief provided.
11. Verify that the power switch is off.
    Switch off the power switch if necessary.

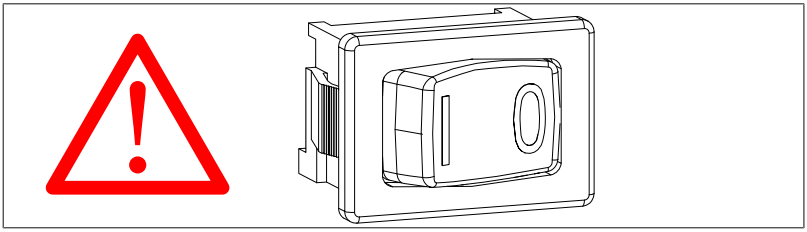

12. Remove the contact protection from the mains connection board.

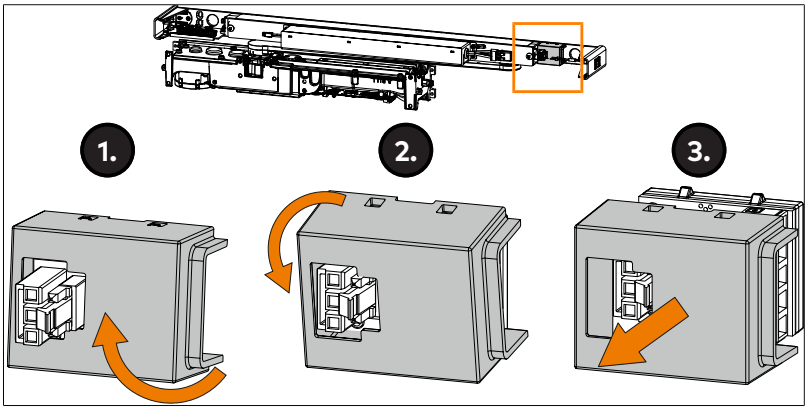

13. Connect the power supply cables to the power supply board.
NOTE The lines S1 and S2 of the power switch are connected ex factory.

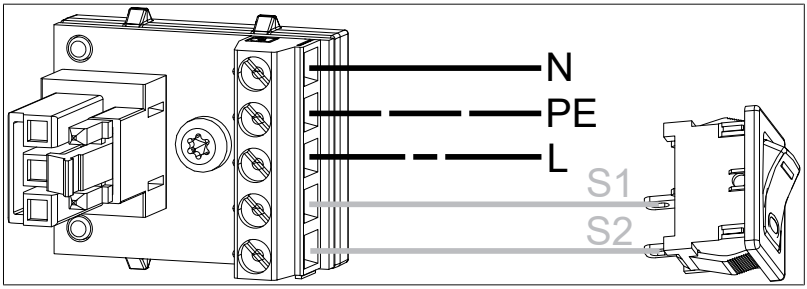

14. Mount the contact protection for the mains connection board.

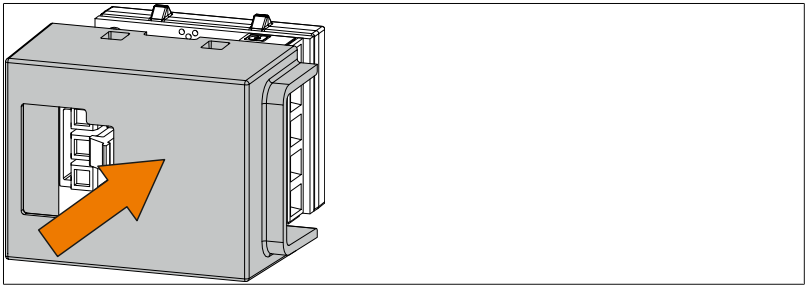

15. Insert the plug from the power supply unit into the mains connection board until you hear a click.

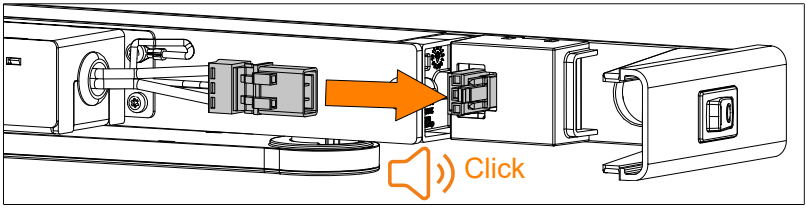

16. Mount the slide rail cover.

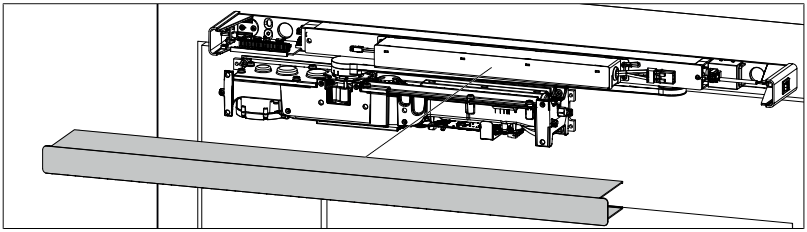

2.3.5 Mounting the Bluetooth board

1. Connect the cable of the Bluetooth board to the control board.

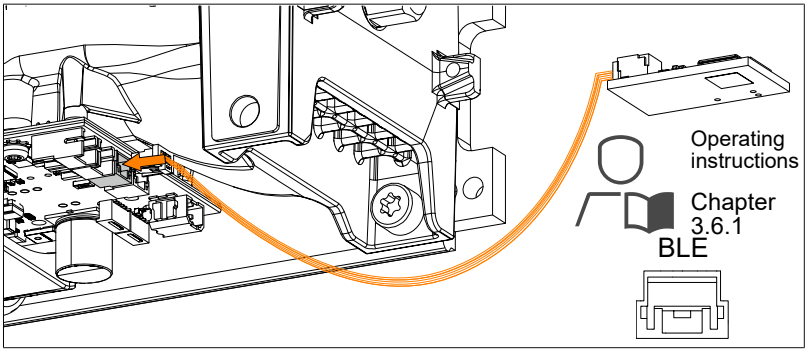

2. Insert the Bluetooth board into the end cap of the operator cover.

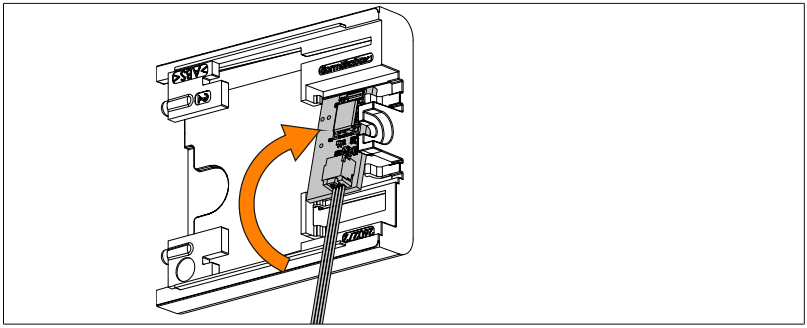

3. Mount the two end caps of the operator cover.

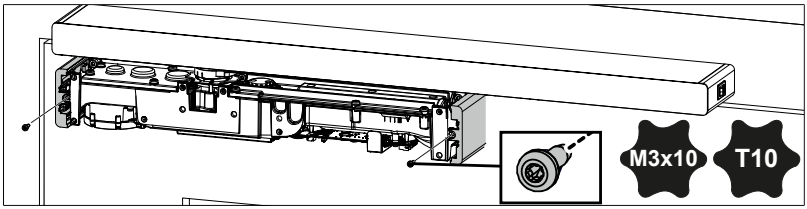

2.4 Lintel mounting

2.4.1 Mounting the mounting plates

✓ The door leaf moves smoothly and is in perfect mechanical condition.

✓ The drill hole for the mains connection cables is present.

1. The included drilling template has a red ledge with arrows.
   Position and fix the drilling template for the selected mounting position in accordance with the sketches.

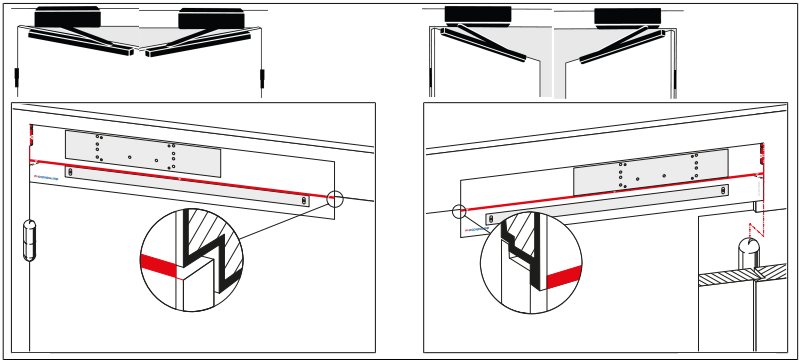

2. Drill the holes according to the drilling template.
3. Secure the operator mounting plate on the lintel with the included Spax 2.5 x30 mm fixing screws or M5 x 30 mm threaded screws in accordance with the door material and suitable on-site fixing materials (retractable nuts, etc.).
   NOTICE! The requirements of door manufacturers must be observed.

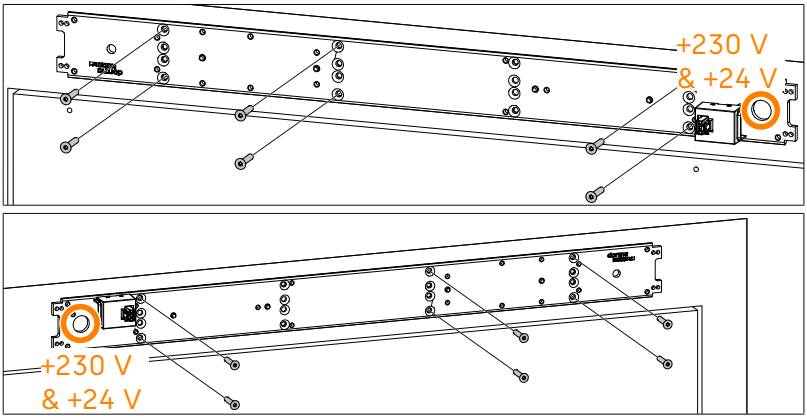

2.4.2 Mounting components on the mounting plate

1. Align the operator and control unit according to the mounting situation and mount with 8 fastening screws.

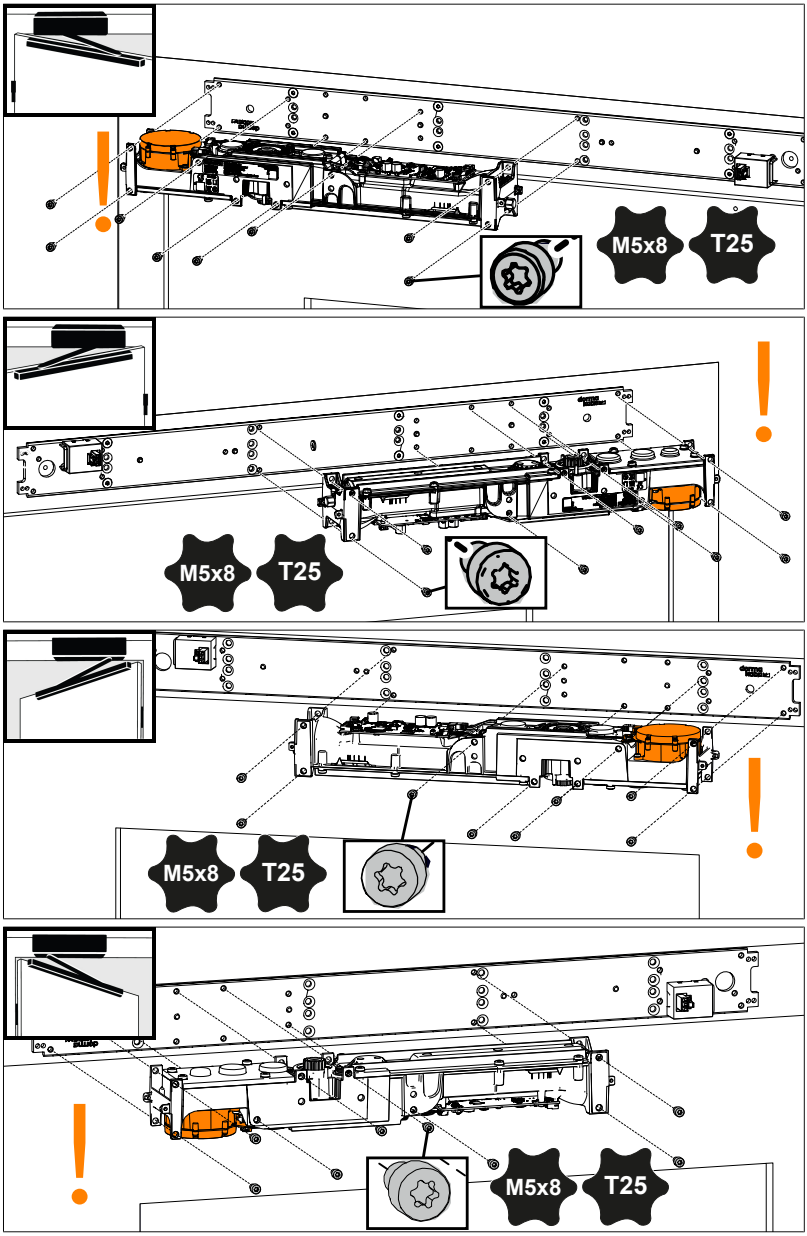

2. release the tension in the spring.

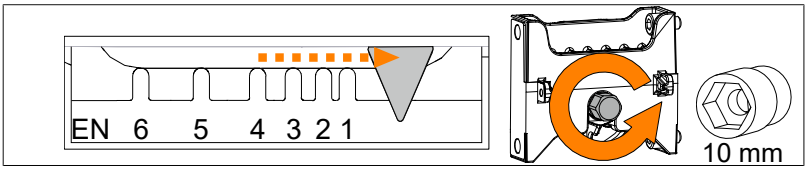

3. Mount the power supply unit.

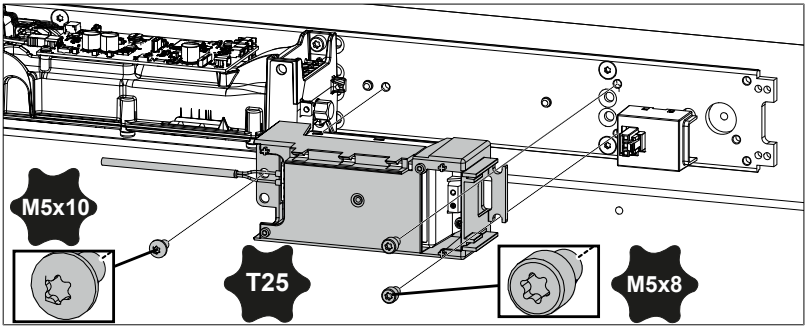

4. Route the power supply from the power supply unit to the control board.

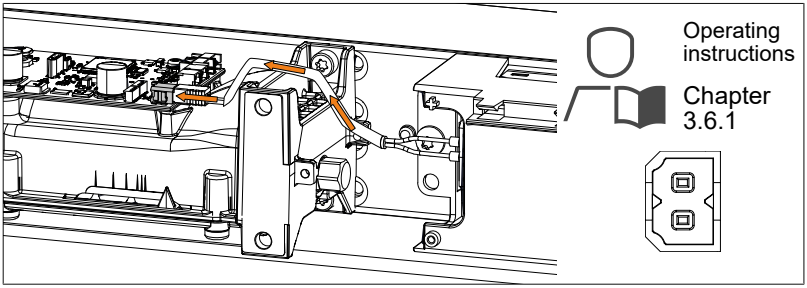

2.4.3 Mounting the IO board

1. Position the IO board and mount the bracket on the mounting plate.
   ⇨ The IO board is fixed.

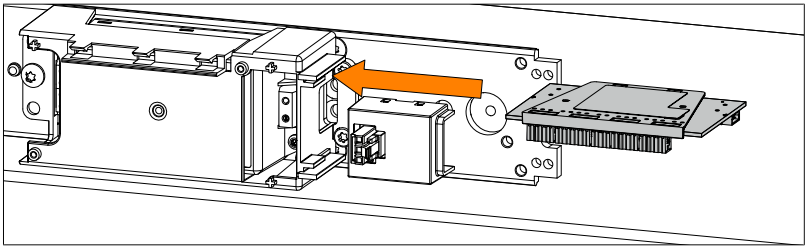

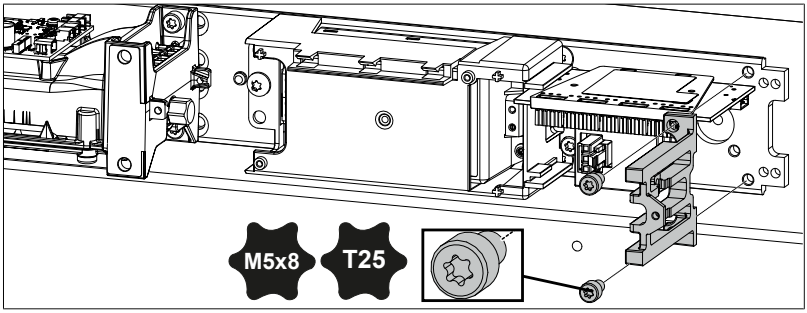

2. Connect the CAN cable to the IO board.

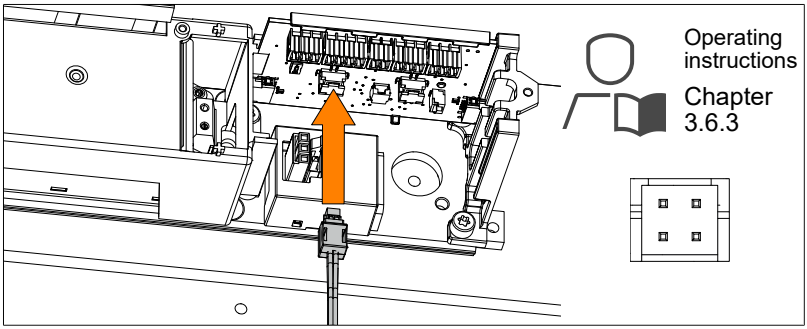

3. Establish the connection from the IO board to the control board.

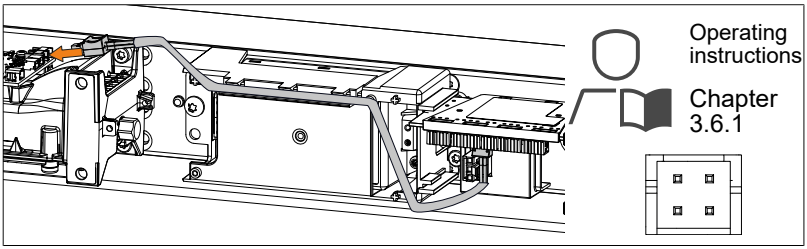

4. Mount the LED board in the bracket and attach it to the IO board.

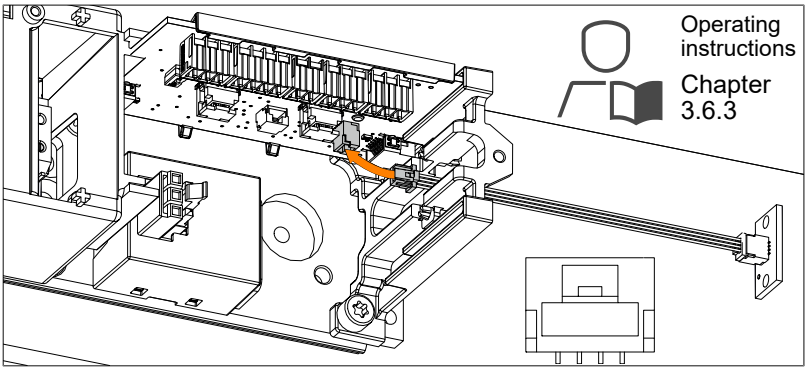

2.4.4 Mounting the Bluetooth board

1. Insert the Bluetooth board into the bracket on the operator cover.

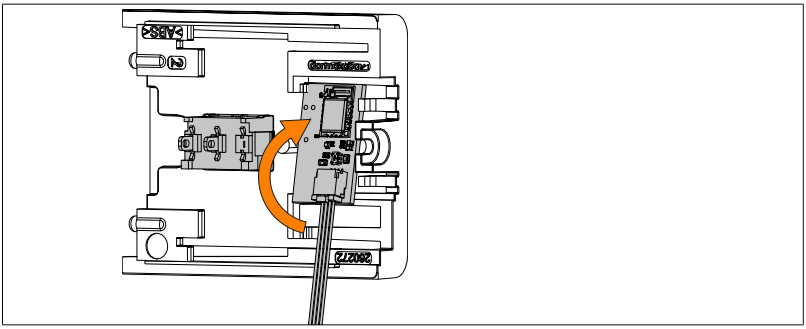

2. Connect the cable of the Bluetooth board to the control board.

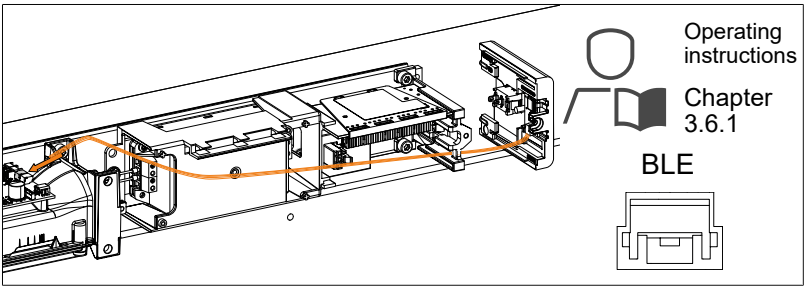

3. Mount the two end caps of the operator cover.

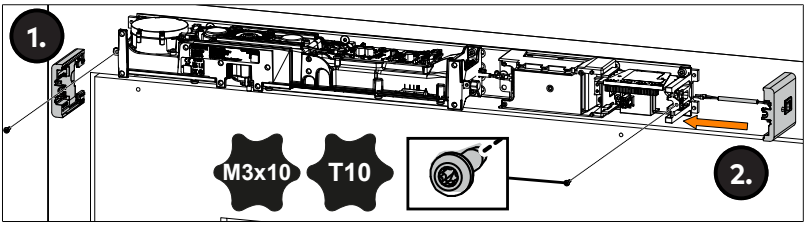

2.4.5 Creating the electrical connection

⚠ DANGER

Risk of death by electrocution

The unit is supplied with 100–240 V AC electrical voltage through the mains connection.

- An on-site cut-off device for all-pole disconnection of the mains connection must be available to ensure safe connection of the unit.

1. Verify that the 230 V/50-60 Hz connection is protected by a 16-A fuse.
   If necessary, protect the connection accordingly.
2. Check that the transverse section of the mains power supply is 3 x 1.5 mm².
3. Disconnect the power supply at the on-site disconnection device to disconnect all poles of the mains power supply.
4. If the mains power supply does not come out of the wall and could therefore be pulled, secure the mains power supply with the strain relief provided.
5. Verify that the power switch is off.
   Switch off the power switch if necessary.

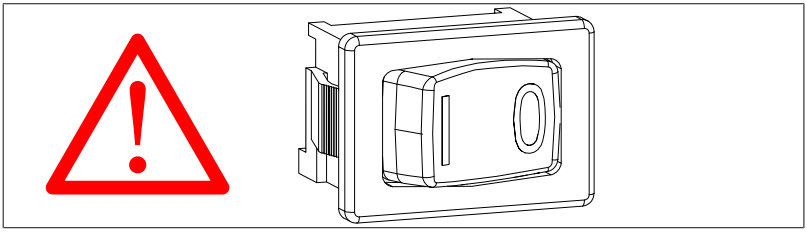

6. Remove the contact protection from the mains connection board.

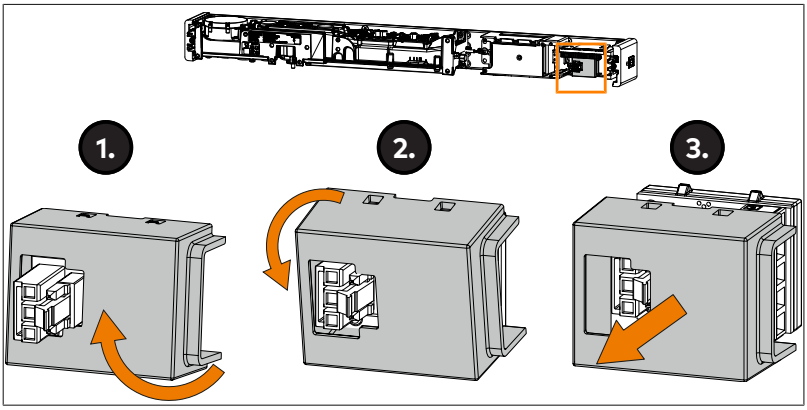

7. Connect the power switch lines S1 and S2 to the power supply board.

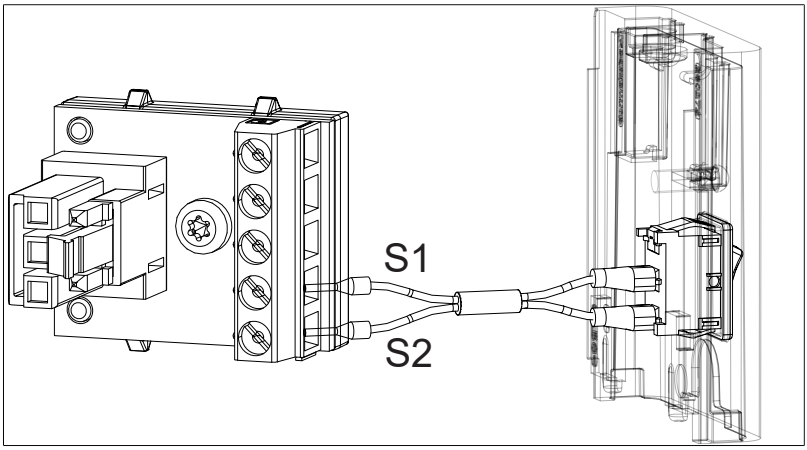

8. Connect the mains connection cables to the top 3 terminals on the mains connection board.

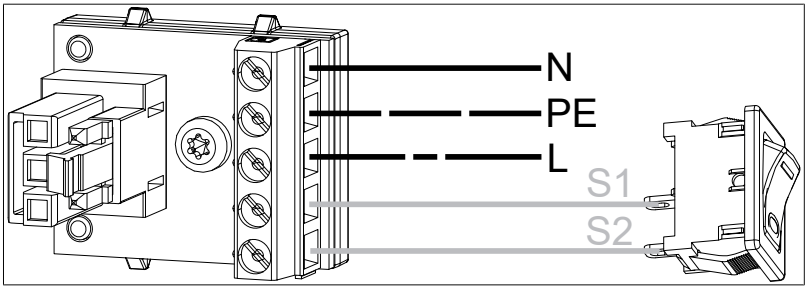

9. Mount the contact protection for the mains connection board.

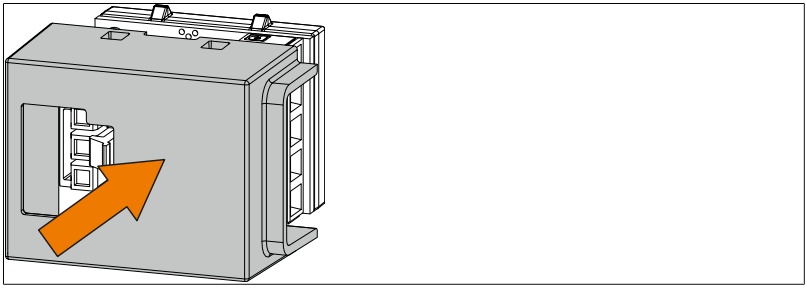

10. Insert the plug from the power supply unit into the mains connection board until you hear a click.

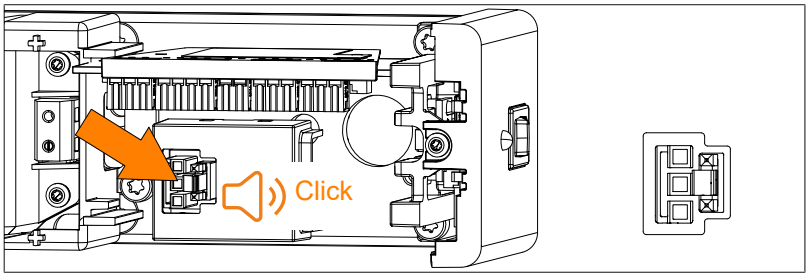

2.4.6 Mounting the slide rail lever

2.4.6.1 Hinge side procedure

1. release the tension in the spring.

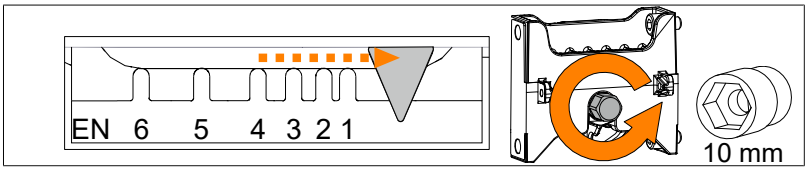

2. Position the slide rail lever parallel to the operator.

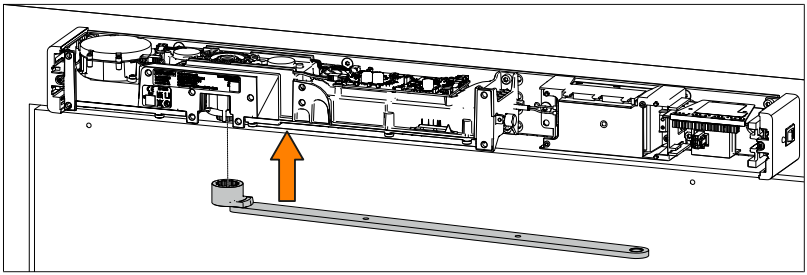

3. Turn the mounted slide rail lever so that the slide rail lever points slightly away from the door leaf or towards the assembling technician.

Top view

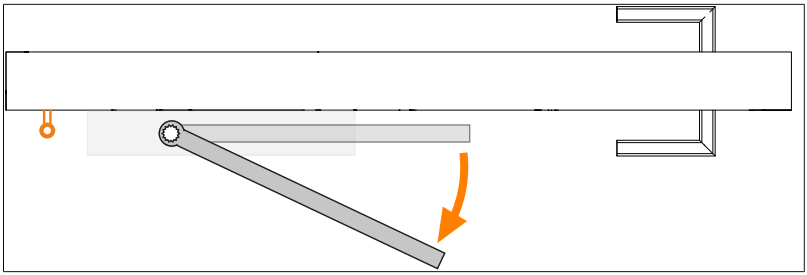

4. Remove the slide rail lever from the drive unit.

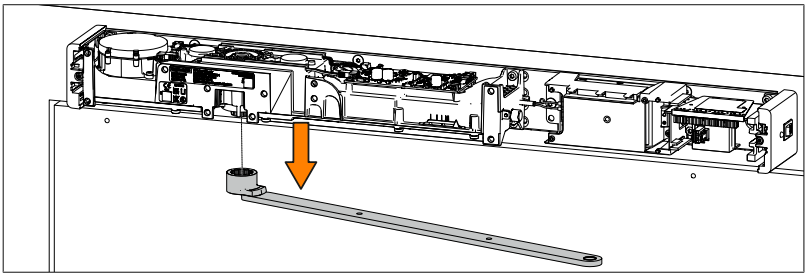

5. Position the slide rail lever with one tooth offset in the direction of the door leaf.

Top view

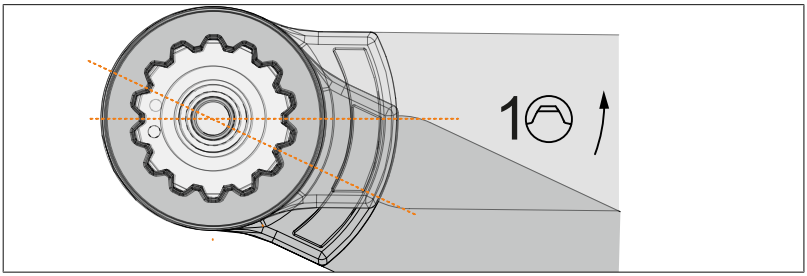

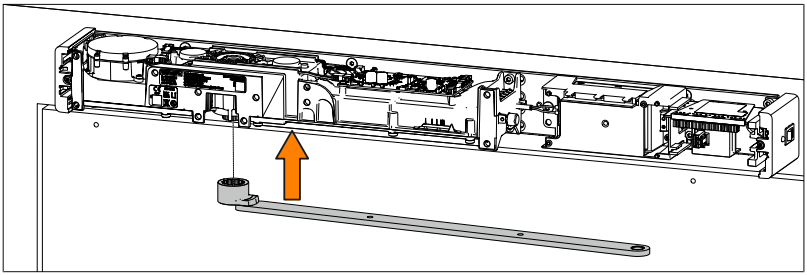

6. Push the output shaft down in the direction of the lever until the screw reaches the internal thread of the lever.
   Screw the slide rail lever to the operator with 5.5 Nm.

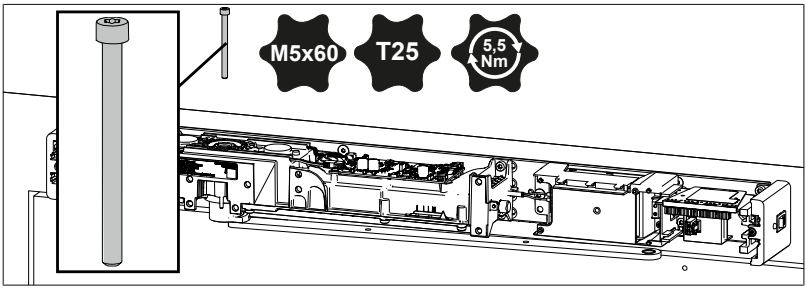

2.4.6.2 Opposite side to the hinge procedure

1. Place the slide rail lever on the operator rotated by one tooth so that the slide rail lever points slightly away from the door leaf or towards the assembling technician.

Top view

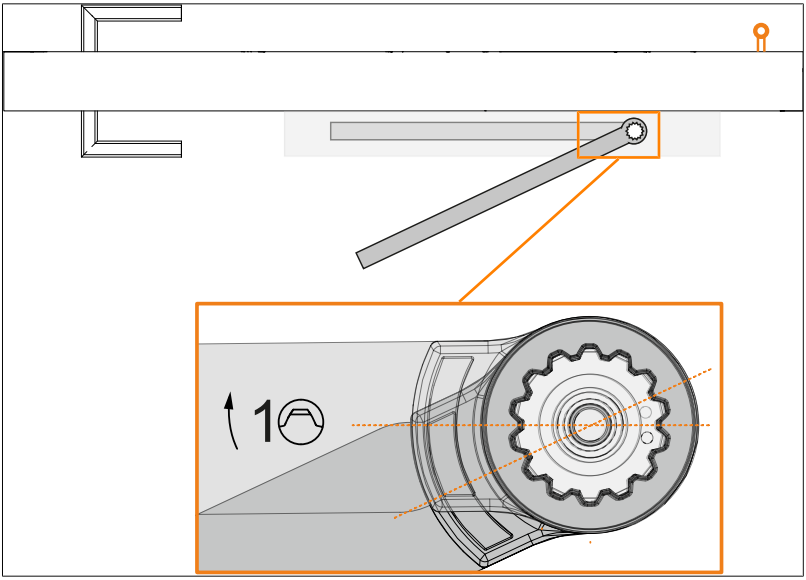

2. Place the slide rail lever on the drive unit.

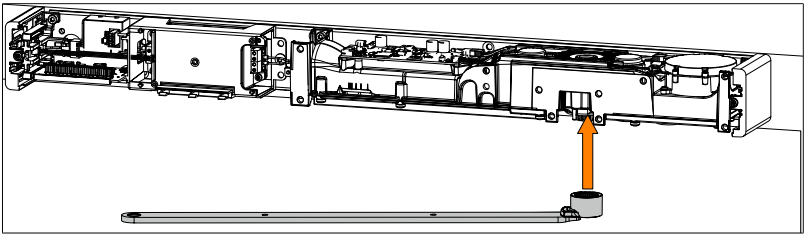

3. Push the slide rail lever towards the mounting plate and screw tight.

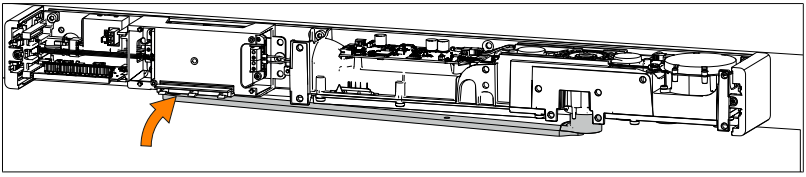

4. Push the output shaft down in the direction of the lever until the screw reaches the internal thread of the lever.
   Screw the slide rail lever to the operator with 5.5 Nm.

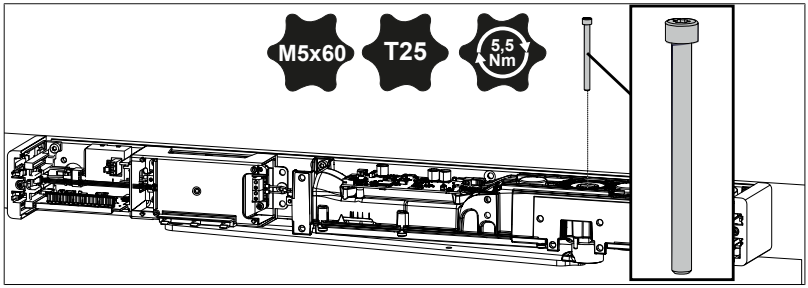

2.4.7 Mount the slide rail

1. Mount the slide rail to the door.

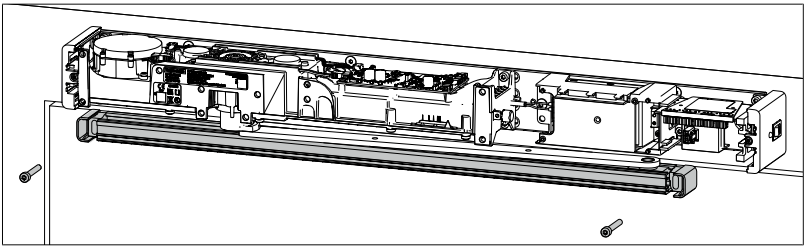

2. Check that the distance between the mounting plate of the operator and the slide rail is an even 20.5 mm.

Front view

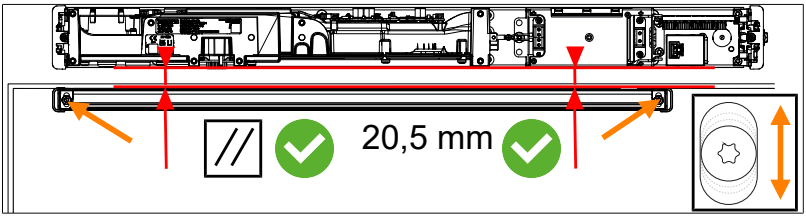

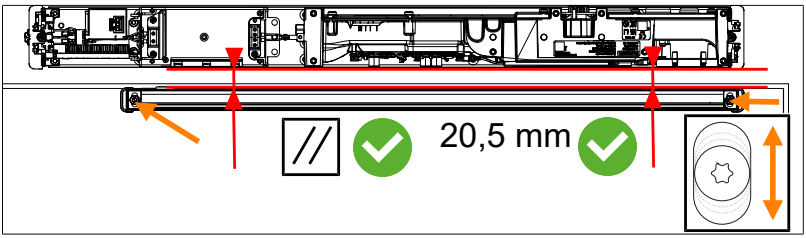

3. Screw the slide rail lever and sliding block into the slide rail with 10 Nm.

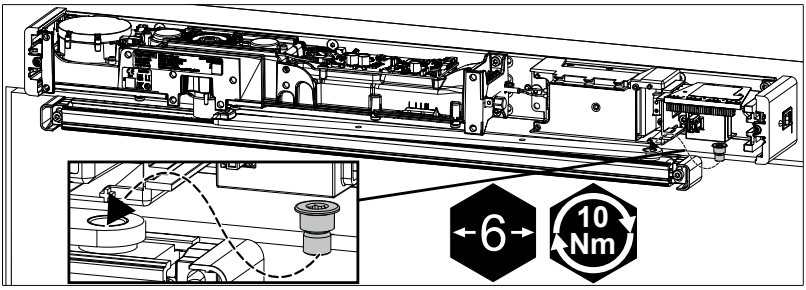

4. Mount the cover of the slide rail lever.

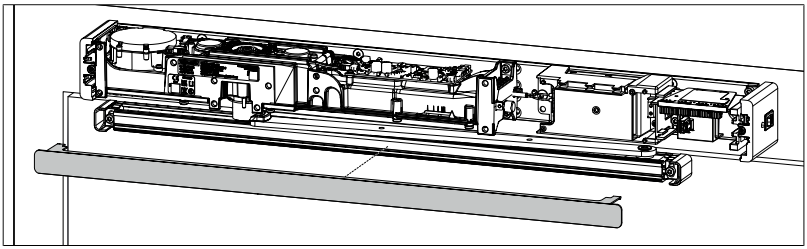

3 Commissioning

3.1 Safety during commissioning

⚠ WARNING

Risk of injury due to insufficiently qualified personnel

Insufficiently qualified personnel cannot assess the risks associated with handling the unit, thus putting themselves or others at risk of serious or life-threatening injury. If unqualified personnel work on the unit or stay in the unit's danger zone, this results in dangers that could cause serious injury and considerable property damage.

- All work described in this manual must be carried out by qualified personnel only.
- Keep inadequately qualified personnel away from the danger zones.
- Contact dormakaba in case of any uncertainties.
- Children must not be in the vicinity when work is being carried out on the unit.

⚠ WARNING

Risk of impact due to moving door leaves

During the teach-in run, the door leaf moves back and forth several times.

- Clear the door path before commissioning and close off the passage.

⚠ WARNING

Risk of injury due to impermissible door leaf closing speed

The mechanical adjustment of the closer spring must be taught in in the "Door Pilot 2" app.

- After the closer spring's adjustment has been changed mechanically, a new teach-in run must be carried out with the "Door Pilot 2" app.

As part of the initial commissioning, an initial inspection must be carried out using the inspection log.

This initial inspection and all other expert inspections must be documented in the inspection log.

3.2 Putting the product into operation

1. Check that the door's area of movement is clear.

2. Switch on the power switch.

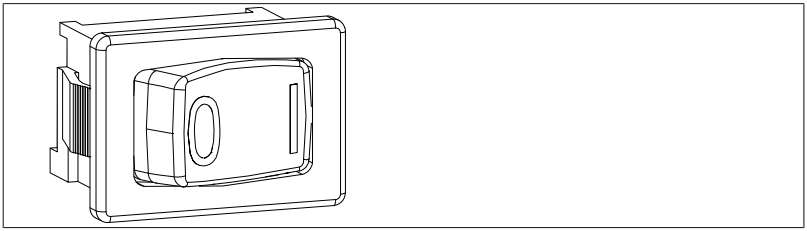

=> After switching on, this LED on the control board flashes green:

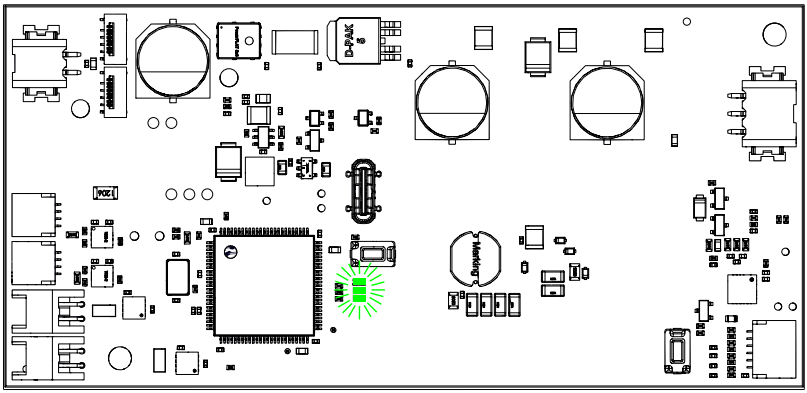

3. release the tension in the spring.

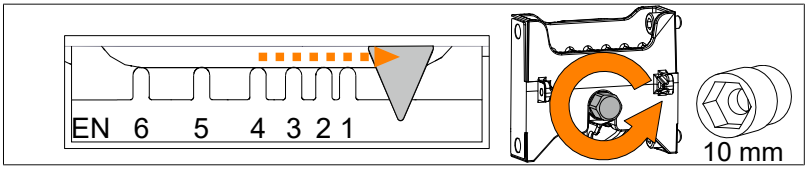

4. Download the "Door Pilot 2" app on your mobile phone.

5. Open the app.

6. When prompted in the app, scan the QR code for commissioning on the operator.

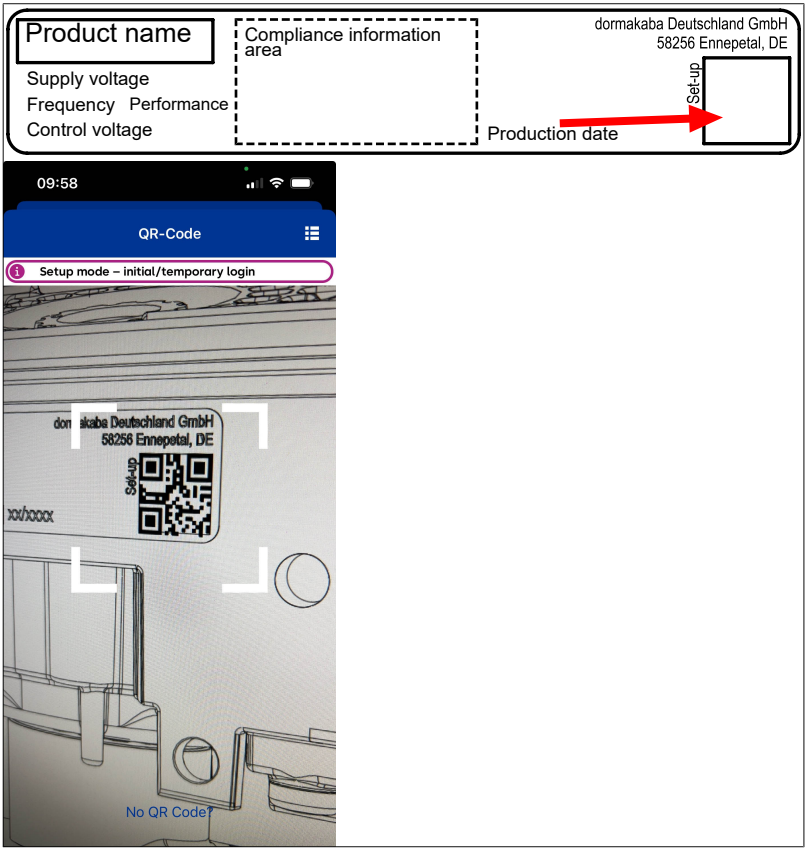

7. Click on the "Configuration" menu item.

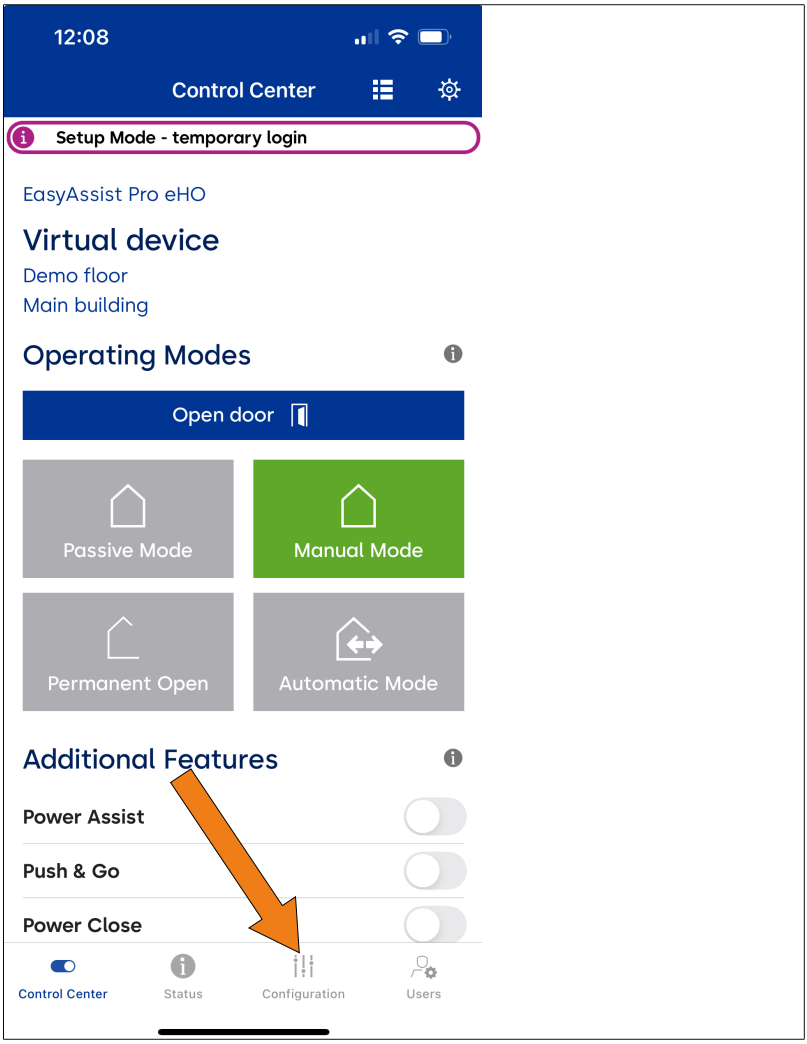

8. Click on the "Commissioning" button.

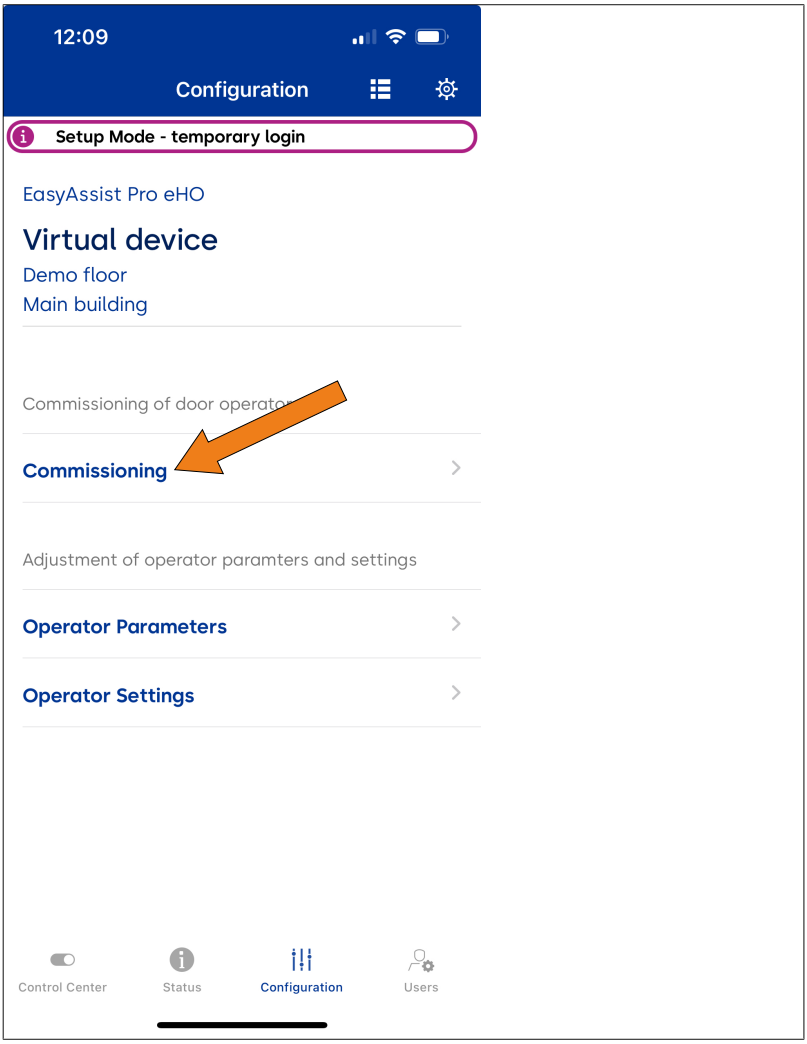

9. In the first step of commissioning, enter the mounting method and the width of the door leaf.
   In the second step, the door handle must be operated if no motor lock or e-opener is connected. To do this, the door slowly opens a little and then closes again. This teaches the weight of the door leaf.

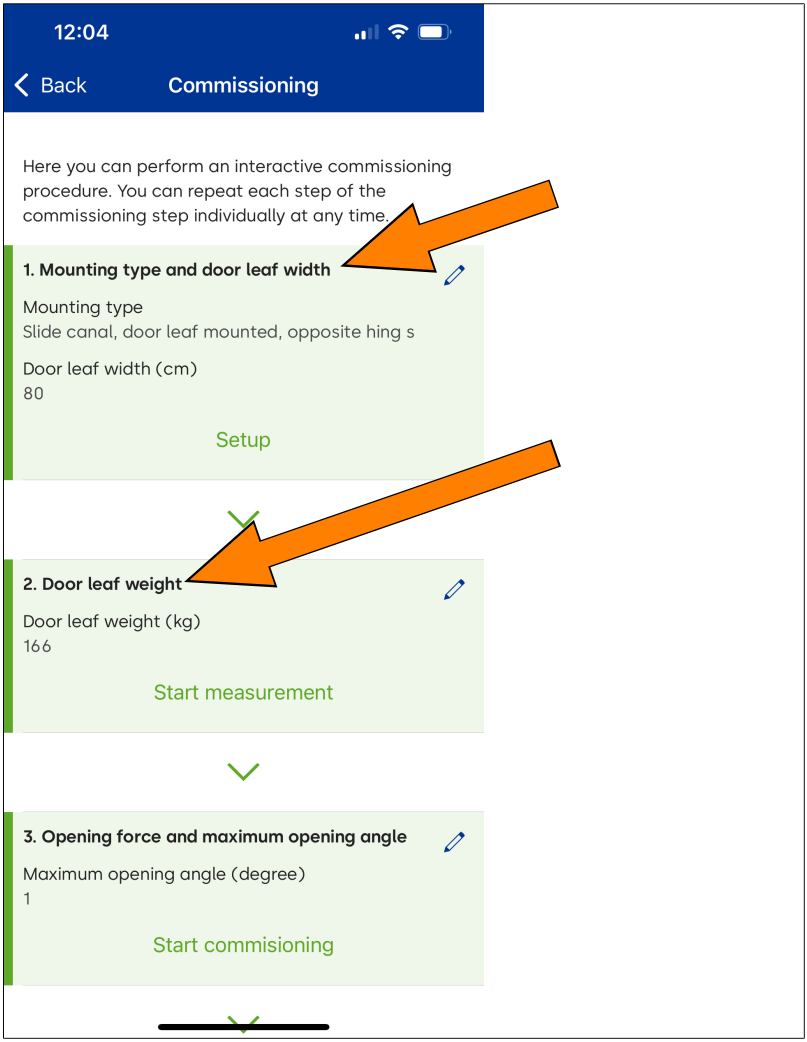

10. Tension the spring to the intended EN class.

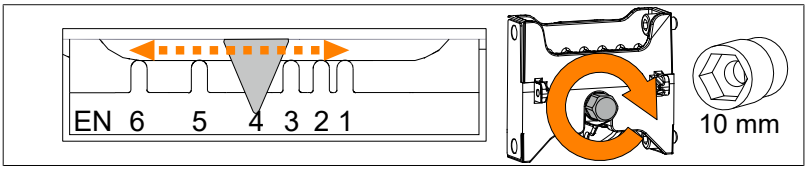

11. In the third step, the opening force and the maximum opening angle are learned.
    To do this, the door opens slowly. As soon as the door has reached the desired open position, the door must be held briefly in place until the closing movement starts.

⚠ WARNING

Risk of crushing due to too large a door gap

The power-close function requires a door gap set at ≤ 8 mm. This is the only way to ensure fingers do not become trapped.

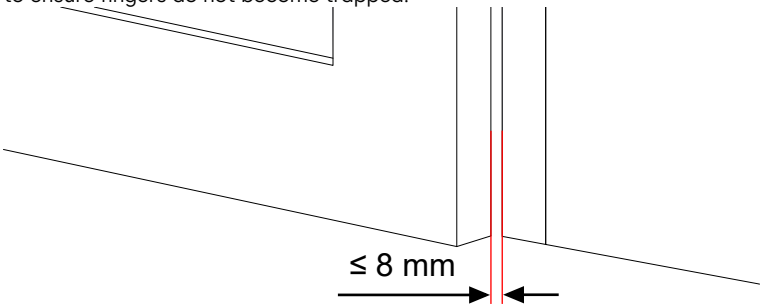

- Start the door gap teach-in process in the “Door Pilot 2” app.
- Set the distance to the desired dimension ≤ 8 mm.
- Confirm.

Maximum opening widths		
	Hinge side	Opposite side to the hinge
Door panel mounting	180 degrees[1]	120 degrees
Lintel mounting	180 degrees	120 degrees

[1] Depending on the door construction

12. In the fourth step, the start position of the power close function is taught.

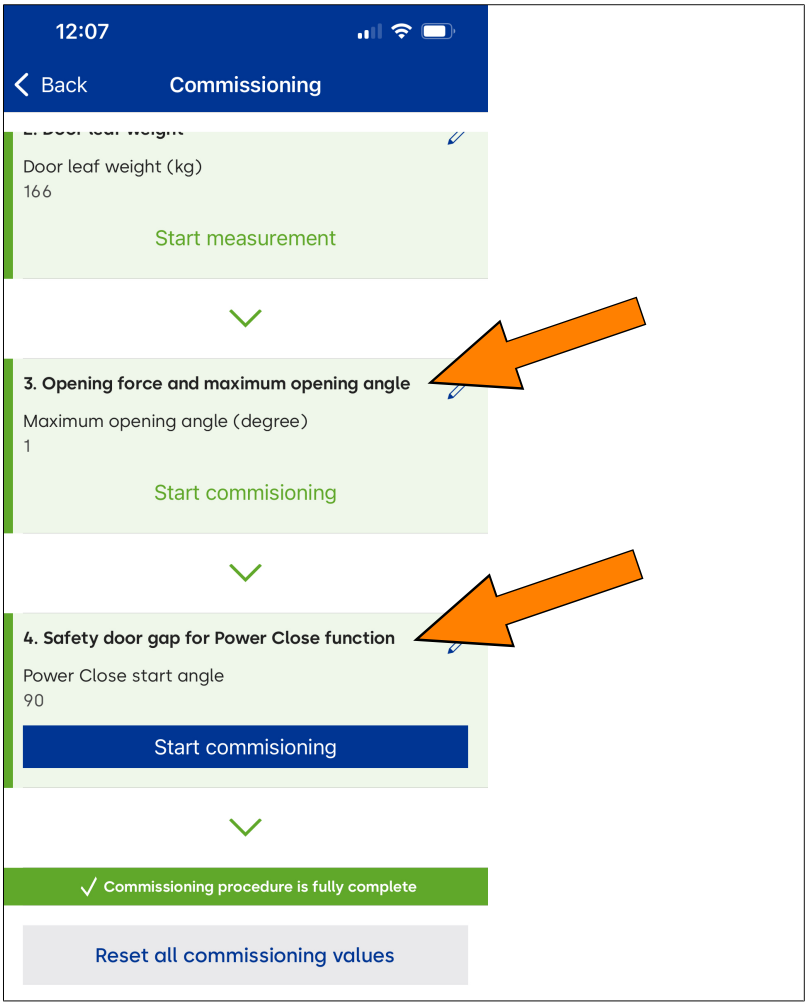

=> After the teach-in process, this LED on the control board flashes blue:

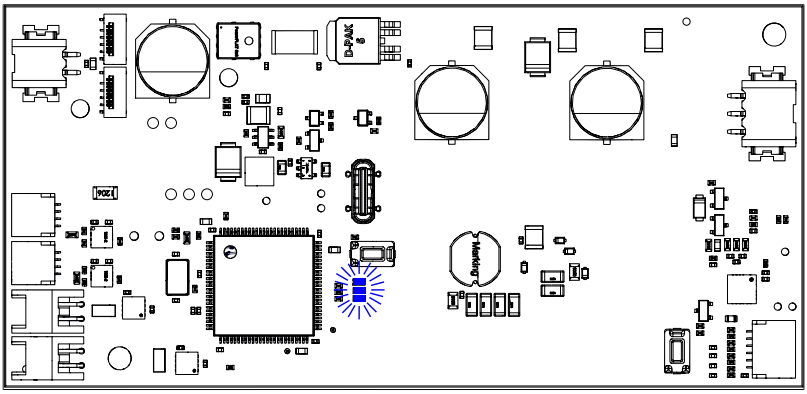

13. If available, put the hold-open system into operation.
14. Depending on the mounting situation, break out the cut-out on the operator cover.

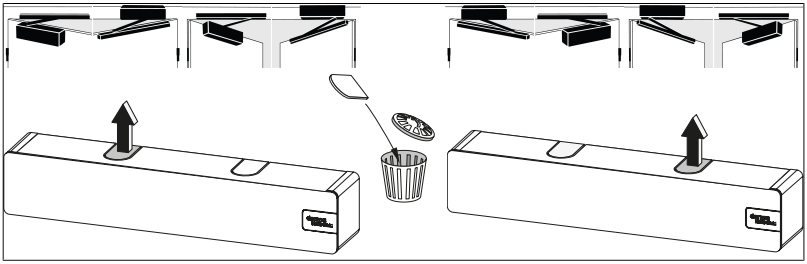

15. Mount the operator cover.

3.3 Putting the hold-open system function into operation

✓ The smoke detector is connected to position 6 of the I/O board, see chapter 3.6.3 of the EasyAssist/EasyAssist Pro/EasyAssist Pro eHO operating instructions.

✓ The teach-in process has been carried out and this LED on the control board flashes blue:

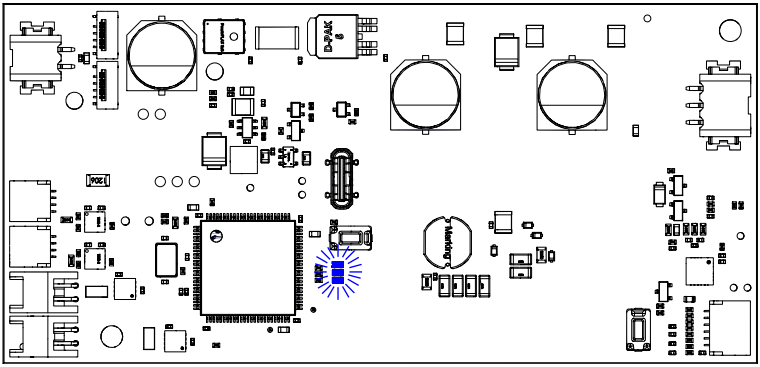

1. Set the DIP switch on the I/O board to the "ON" position.

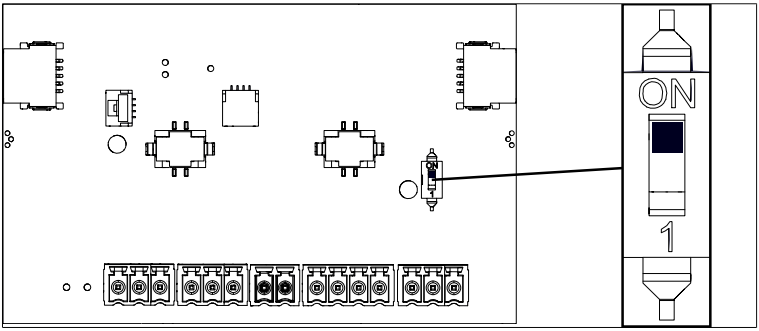

⇨ The hold-open system function is activated.

⇨ The LED status on the control board changes from flashing blue to flashing red.

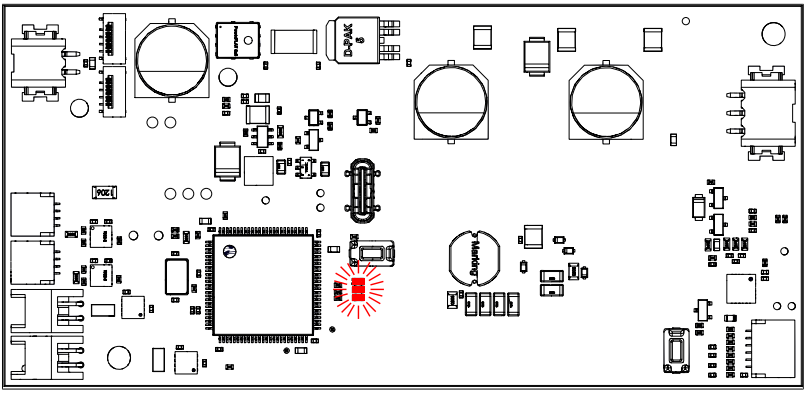

2. Carry out a CAN reset: "Door Pilot 2" app > "Status" menu item > "CAN devices" button > "Re-detect peripheral devices"

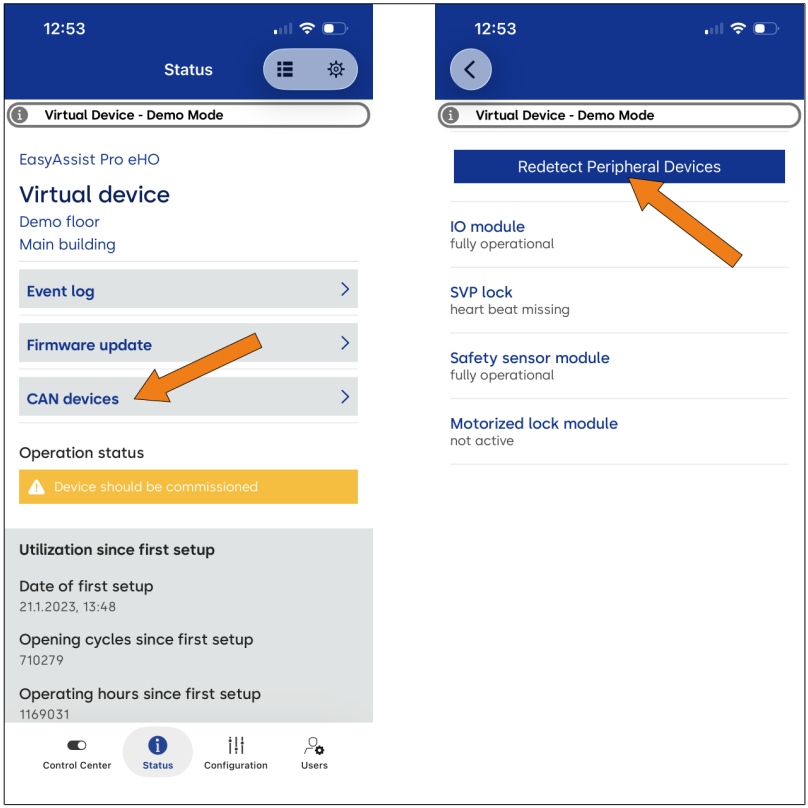

⇨ The hold-open system function has been taught.

⇨ The LED status on the control board changes from flashing red to flashing blue.
This indicates that the teaching has been completed and that the error 53-0 has been acknowledged.

⇨ The LED in the end cap is switched on and lights up red.
This means that the hold-open system is activated.

3. Change the operating mode or open the door manually to the set opening width - 5°.

⇨ The hold-open system function has been put into operation.
The LED in the end cap lights up green and thus indicates that the hold-open system is no longer activated.

www.dormakaba.com

dormakaba Deutschland GmbH
DORMA Platz 1
58256 Ennepetal
Germany
+49 2333 793-0

www.dormakaba.com