TRIBHUVAN UNIVERSITY
INSTITUTE OF ENGINEERING
Examination Control Division
2082 Chaitra

Exam.	Regular (New Course)		
Level	BE	Full Marks	60
Programme	BCE	Pass Marks	24
Year / Part	II / I	Time	3 hrs.

Subject: - Fluid Mechanics (*ENCE 201*)

- ✓ *Candidates are required to give their answers in their own words as far as practicable.*
- ✓ *Attempt **All** questions.*
- ✓ *The figures in the margin indicate **Full Marks**.*
- ✓ *Assume suitable data if necessary.*

NCE LIBRARY

1. a) Define cavitation. Derive an expression of capillary fall when small diameter tube is vertically submerged in the mercury. [1+2]

   b) For the multi-fluid manometer system shown in the figure below, determine the unknown differential reading (h) in the central manometer. Assume specific weight of air = 12 N/m^3. [6]

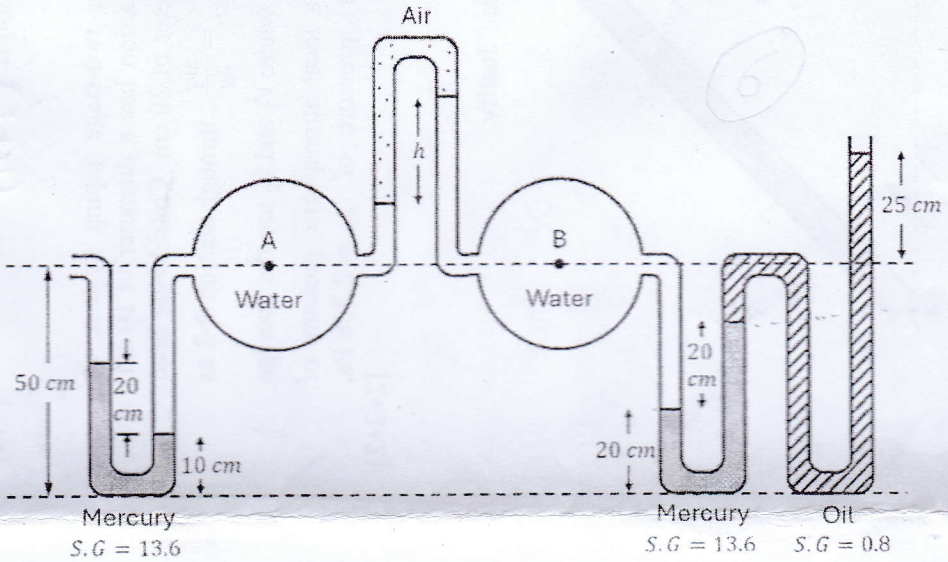

2. a) A solid object composed of a rectangular base (0.3 m × 0.3 m × 0.1 m) and cylinder on top (height = 0.3 m and diameter = 0.1 m) as shown below having density of 900 kg/m^3 is floating in water. Is it in stable equilibrium or not? Justify. [6]

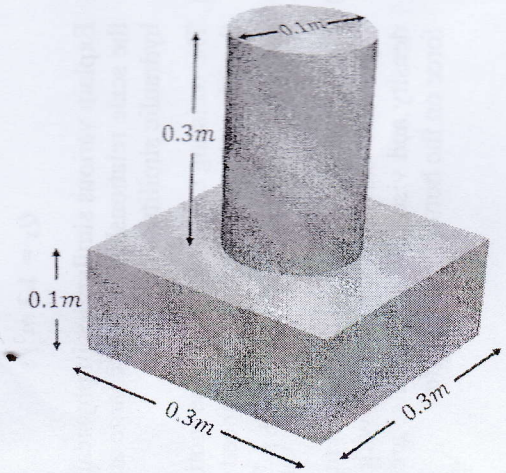

   b) A curved surface ABCDE divides a closed pressurized tank and an open tank as shown in the figure below. If the width of the tank is 10 m, calculate the Horizontal and Vertical components of force on the curved surface ABCDE. Calculate also the location of those components. [6+2]

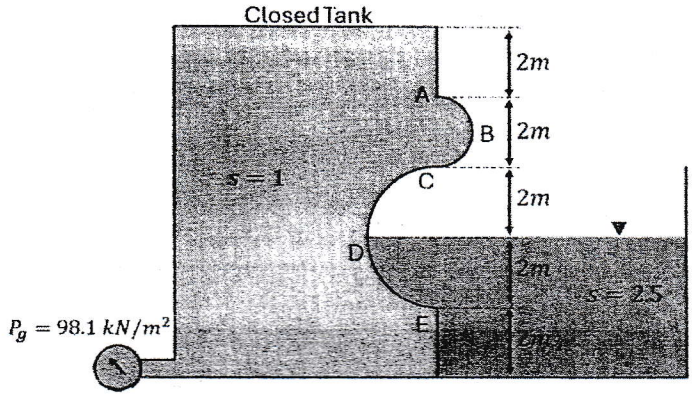

3. a) Define pathlines and streaklines. In a two-dimensional incompressible flow, the fluid velocity components are given by u = x - 4y and v = - y - 4x. Do velocity potential and stream function exist? If yes, determine their equations. [2+4]

b) Water at 20°C is conveyed a reservoir through a two-stage piping system, as illustrated in the figure. The initial, smaller pipe section has a diameter of 10 cm, which expands to a larger pipe section with a diameter of 20 cm. Considering head loss in the flow, through section 1-2 is given as $h_{L_{1-2}} = \frac{2V_1^2}{2g}$, through section 2-3 as $h_{L_{2-3}} = \frac{3V_2^2}{2g}$ and through section 3-4 as $h_{L_{3-4}} = \frac{2V_2^2}{2g}$ where V_1 and V_2 are the average fluid velocities in their respective sections. Given a local atmospheric pressure of $p_{atm} = 101{,}323$ Pa and a water saturation (vapor) pressure of $p_v = 2{,}338$ Pa, determine the following: [2+2+2]

i) The flow rate (Q) in the pipe.

ii) Pressure at points 2 and 3 in the pipe.

iii) Whether cavitation occurs or not in the pipe system? Justify.

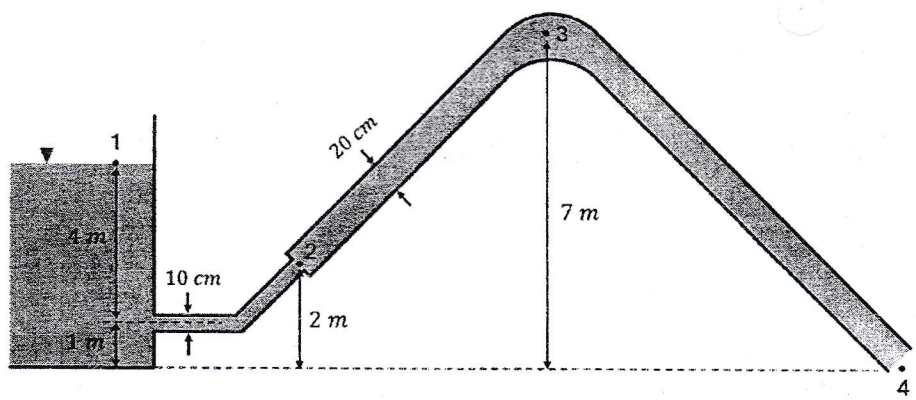

4. a) Define hydraulic coefficients. Derive an expression for the discharge in the case of partially and fully submerged orifices. [1+3]

b) Consider the steady flow of water in a fluid mixing box with two inlets (1 and 2) and one outlet (3), as shown in the figure. The total weight of the water and the mixing box is 4000 N. The pipes have diameters of $D_1 = 0.4$ m, $D_2 = 0.3$ m, and $D_3 = 0.5$ m. At inlet 1, water enters with a volume flow rate of $Q_1 = 0.8\ m^3/s$ and a gage pressure of $p_1 = 10$ kPa. At outlet 3, the mixture discharges to the atmosphere with a volume flow rate of $Q_3 = 1.2\ m^3/s$. Determine the following:

i) The velocity of flow required at inlet 2. [1]

ii) The reaction forces R_x and R_y required to hold the box stationary. [3+3]

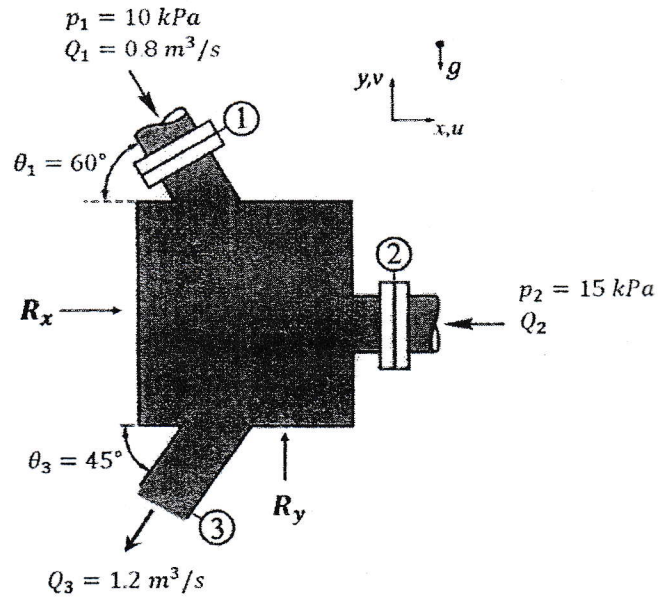

5. a) Explain various similarities in physical modeling. Using the Froude model law, derive the scale relationships for discharge and Power between a model and its prototype in hydraulic similitude. [2+2]

b) The resisting torque T against the motion of a shaft in a lubricated bearing depends on the viscosity μ, the rotational speed N, the diameter D and the bearing pressure intensity p. Show that $T = \mu N D^3 \phi\left(\frac{p}{\mu N}\right)$ [4]

c) Derive an expression of displacement thickness. A smooth flat plate 35 m long and 10m wide moves in a sea water with a speed of 1.5 m/s in direction of length. The density and viscosity of sea water are 1050 kg/m^3 and 0.001 Pa.s. Find out the drag force on the bottom of the plate. [2+4]

OR

Define drag and lift coefficients with equations. Discuss the variation of drag force on a smooth circular cylinder placed in a uniform flow with respect to the Reynolds number. Explain the changes in flow separation, wake formation, and drag coefficient for different ranges of Reynolds number. [2+4]

***

TRIBHUVAN UNIVERSITY
INSTITUTE OF ENGINEERING
Examination Control Division
2082 Kartik

Exam.	Back (New Course)		
Level	BE	Full Marks	60
Programme	BCE	Pass Marks	24
Year / Part	II / I	Time	3 hrs.

Subject - Fluid Mechanics *(ENCE 201)*

- ✓ *Candidates are required to give their answers in their own words as far as practicable*
- ✓ *Attempt **All** questions*
- ✓ *The figures in the margin indicate **Full Marks***
- ✓ *Assume suitable data if necessary*

1. a) A concrete block ($sp.gr. = 2.5$) having weight W is tied to the bottom of slanted rectangular gate (OA) having unit width with the help of a cable (ABC) mounted on a pully system as shown in figure below. The slanted gate has a weight of $2kN$ and is hinged at point O to allow opening and closing of the gate. Determine the Volume of the concrete block (V) if the block is just about to open the gate in the condition shown by the figure. [6]

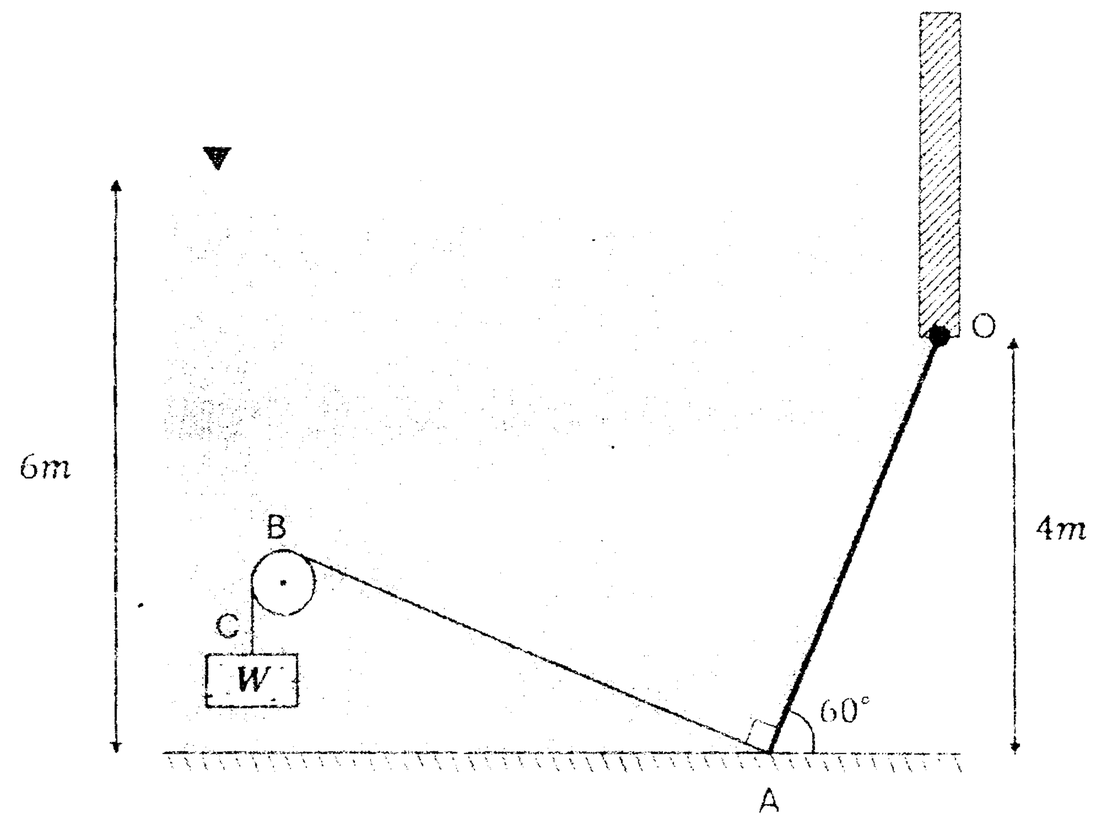

b) A jet of water from a nozzle is deflected through 60° from its original direction by a curved plate which it enters tangentially without shock with a velocity of 30 m/s and leaves with a mean velocity of 25 m/s. If the discharge from the nozzle is 0.8 kg/s, calculate the magnitude and direction of the resultant force on the vane, if the vane is stationary. [6]

2. a) The performance of a spillway of a power project is to be studied utilizing a model constructed to a scale of 1:9. Neglecting the viscous and surface tension effect, determine: [3+3]

(i) The rate of flow in the model for a prototype discharge of 1000 m^3/s and

(ii) The dissipation of energy in the prototype hydraulic jump, if the jump in the model studies dissipates 0.4 horsepower.

b) Figure shows a pressure gauge with the following particulars:-

The cross-sectional area of each of the bulbs L and M = 1200mm^2
The cross-sectional area of each vertical limb = 30mm^2
The specific gravity of the liquid filled in bulb M = 0.9

If the surface of separation is in the limb attached to M, find the displacement of the surface of separation when the pressure on the surface in M is greater than that in L by an amount equal to 20 mm of head of water. [6]

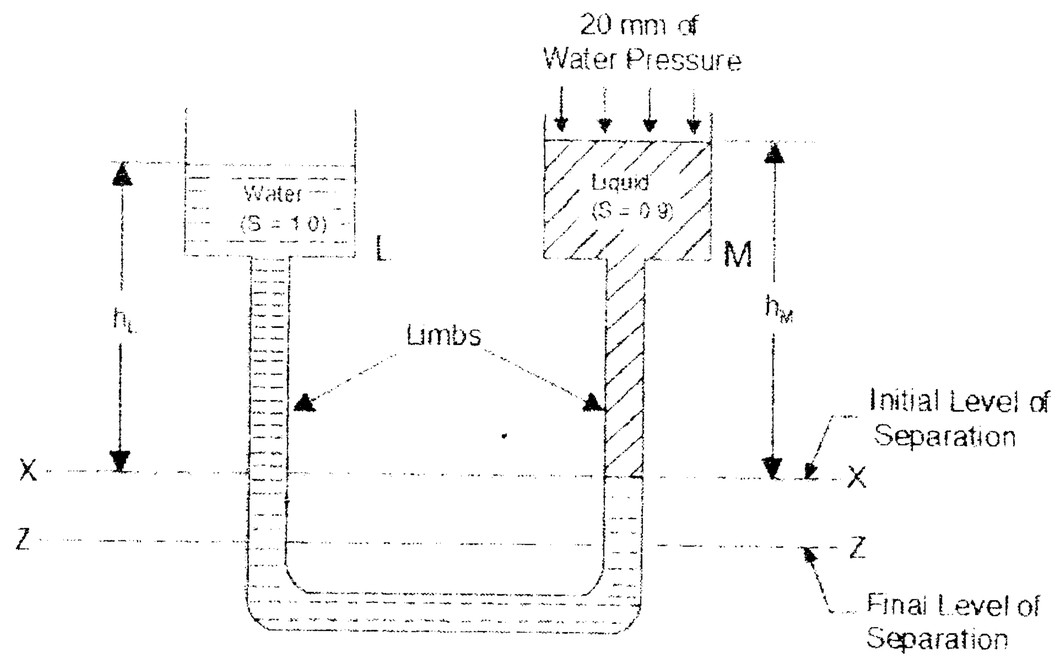

3. a) Derive Euler's equation of motion and hence deduce Bernoulli's equation from the derived equation. Mention the basic assumptions & explain the each term of Bernoulli's with neat diagram. [6]

   b) A smooth flat plate 2.0 m wide and 2.5 m long is towed in oil (S = 0.8) at a velocity of 1.5 m/s along its length. Find the thickness of the boundary layer and shear stress at the trailing edge of the plate. Also, find the power required for towing the plate. [$\upsilon = 10^{-4} m^2$]. [6]

4. a) Define Metacentre and derive an expression for metacentric height determination by analytical method. [1+5]

   b) Differentiate between the rotational and irrotational flows. If $\varphi = 3xy$, find x and y components of velocity at (1, 3) and (3, 3). Determine the discharge between stream lines passing through these points. [2+4]

5. a) The depth of water in 300 m wide rectangular river is 2 m and the velocity of flow is 0.6 m/s. What should be the height of weir to be built across the river if the depth of water in the river upstream side of the weir is not to exceed 3.5 m. Consider velocity of approach and take coefficient of discharge for the weir as 0.62. [6]

   b) A solid cone of radius r_o and vertex angle 2θ is to rotate at an angular velocity ω. An oil of viscosity μ and thickness h fills the gap between the cone and the housing. Determine torque T required to rotate the cone. [6]

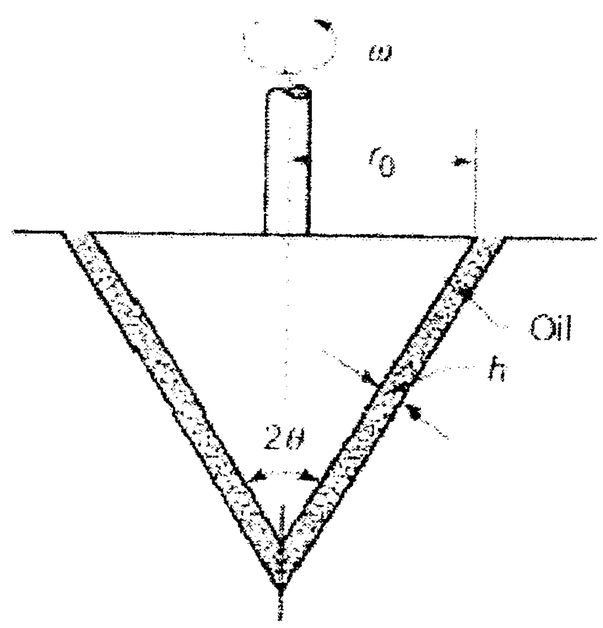

***

TRIBHUVAN UNIVERSITY
INSTITUTE OF ENGINEERING
Examination Control Division
2081 Chaitra

Exam.	Regular (New Course)		
Level	BE	Full Marks	60
Programme	BCE	Pass Marks	24
Year / Part	II / I	Time	3 hrs.

Subject: - Fluid Mechanics *(ENCE 201)*

- ✓ *Candidates are required to give their answers in their own words as far as practicable.*
- ✓ *Attempt **All** questions.*
- ✓ *The figures in the margin indicate **Full Marks**.*
- ✓ *Assume suitable data if necessary.*

1. a) What do you mean by capillarity? Obtain the expression for capillary rise of a liquid in a glass tube. [3]

   b) Define the term poise and stokes with their dimensions. What is cavitation? [3]

   c) Determine the magnitude and direction of the resultant hydrostatic force on curve surface ABCDEFGHI. [6]

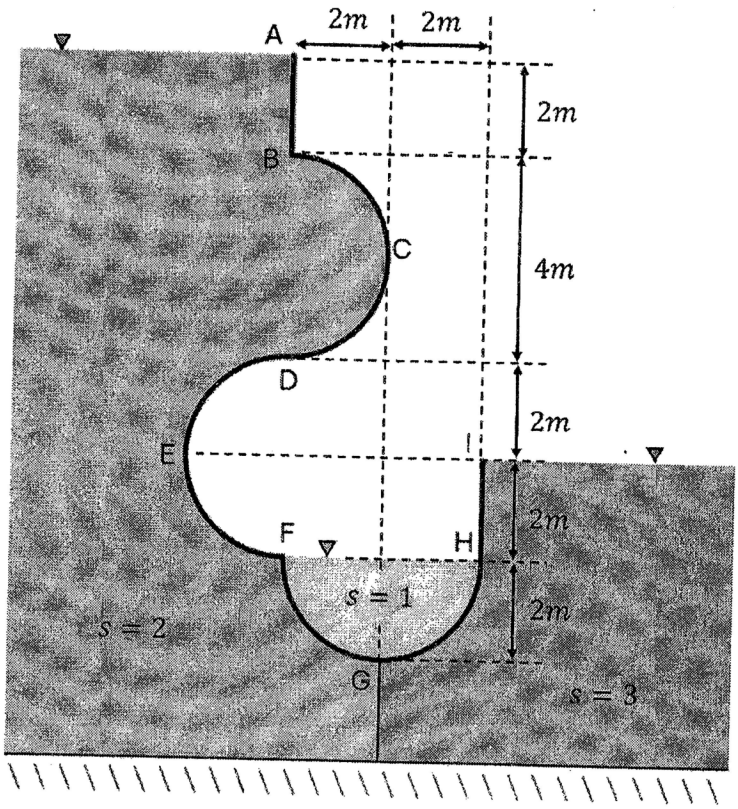

2. a) A pump having efficiency 80% draws water from reservoir A and lifts it to reservoir B with the help of 100 mm diameter pipe as shown in the figure below. The loss of head in the pipe from A to 1 is two times the velocity head, from 2 to 3 is 5 times the velocity head and from 3 to B is 3 times the velocity head. Determine the following: [3+3]
   (i) Discharge delivered by the pump.
   (ii) Power delivered by the pump in kW.

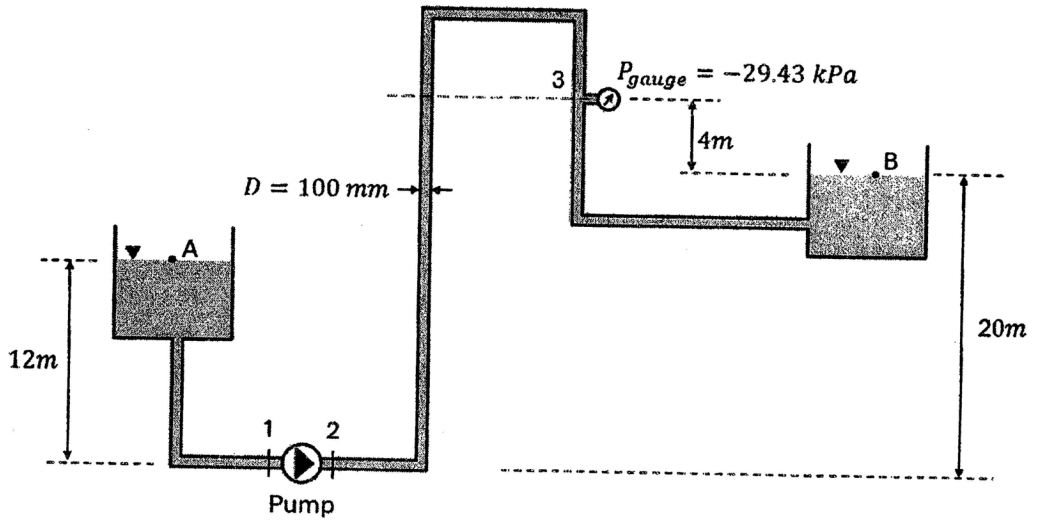

b) An open circular cylinder of 60 cm diameter and 1 m long is rotated with an angular velocity ω. The water surface profile in the rotating cylinder is as shown in the figure below. Determine the angular velocity (ω) of the cylinder if the gauge pressure at point 1 is found to be 4.9 kPa. [6]

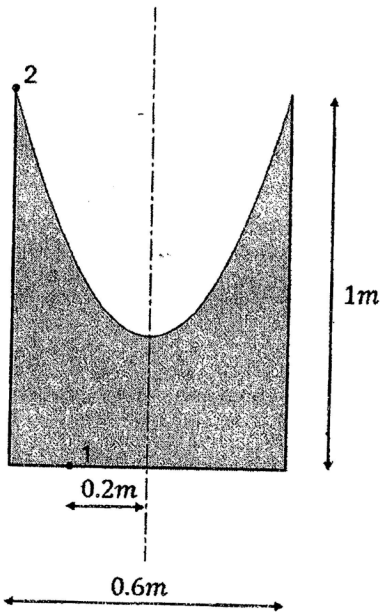

3. a) Two tanks with orifices A and B in the same vertical plane are placed on the same level and it is desired to adjust the distance between them so that the jets intersects in the plane of bases. Calculate the distance x if the depth of water in each tank is 40 cm. Is the point equidistant from the two tanks? What happens if the orifices A and B are located differently? [4+1+1]

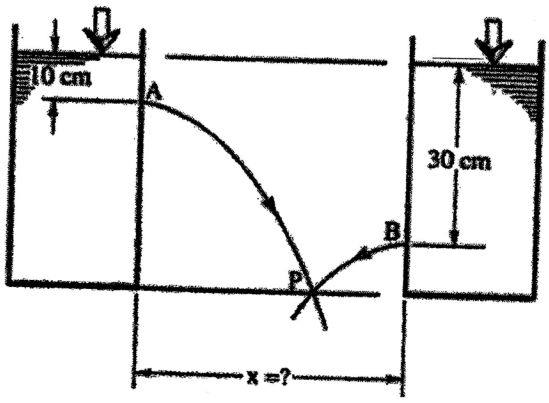

OR

Determine the rate of flow of water through a pipe of 400 mm diameter placed in an inclined position where a venturimeter is inserted, having a throat diameter of 250 mm. The difference of pressure between the main and throat is measured by a liquid of sp. gravity 0.7 in an inverted U- tube which gives a reading of 260 mm. The loss of head between the main and throat is 0.4 times the kinetic head of the pipe. [6]

b) Water and oil flow in horizontal pipelines. A double U-tube manometer is connected between the pipelines as shown in figure below. Calculate the pressure difference between the pipes. [6]

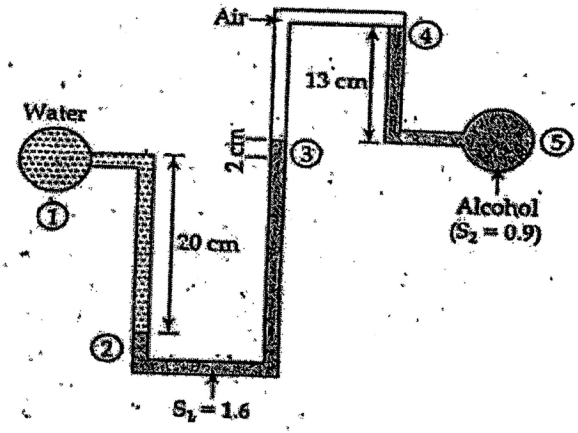

4. a) Define the Lagrangian and Eulerian methods in fluid kinematics. Derive an expression for continuity equation in the Cartesian coordinate system. [2+4]

b) A 0.4 m diameter 90° vertical bend carries 0.5 m^3 /s oil of specific gravity 0.85 with a pressure of 118 kN/m^2 at inlet to the bend. The volume of the bend is 0.1 m^3. Find the magnitude and direction of the force on the bend. Neglect friction and assume both inlet and outlet sections to be at same horizontal level. Also assume that water enters the bend at 45° to the horizontal. [6]

5. a) Describe with neat sketch the formation of boundary layer in the flat plate with zero pressure gradient. What are pressure drag, friction drag and lift forces? [3+3]

b) Prove that the form of equation for discharge Q through a sharp-edge triangular notch assuming Q depends on the central angle θ , head H, acceleration due to gravity g, density of fluid ρ , viscosity of fluid μ and surface tension of fluid σ is $Q = CH^{5/2}$ where

$$C = \left(g^{1/2}\right)\phi\left[\left(\frac{\mu}{\rho g^{1/2}H^{3/2}}\right),\left(\frac{\sigma}{\rho g H^2}\right),\theta\right]$$ using Buckingham - π method. [6]

***