CIRILLA-LC

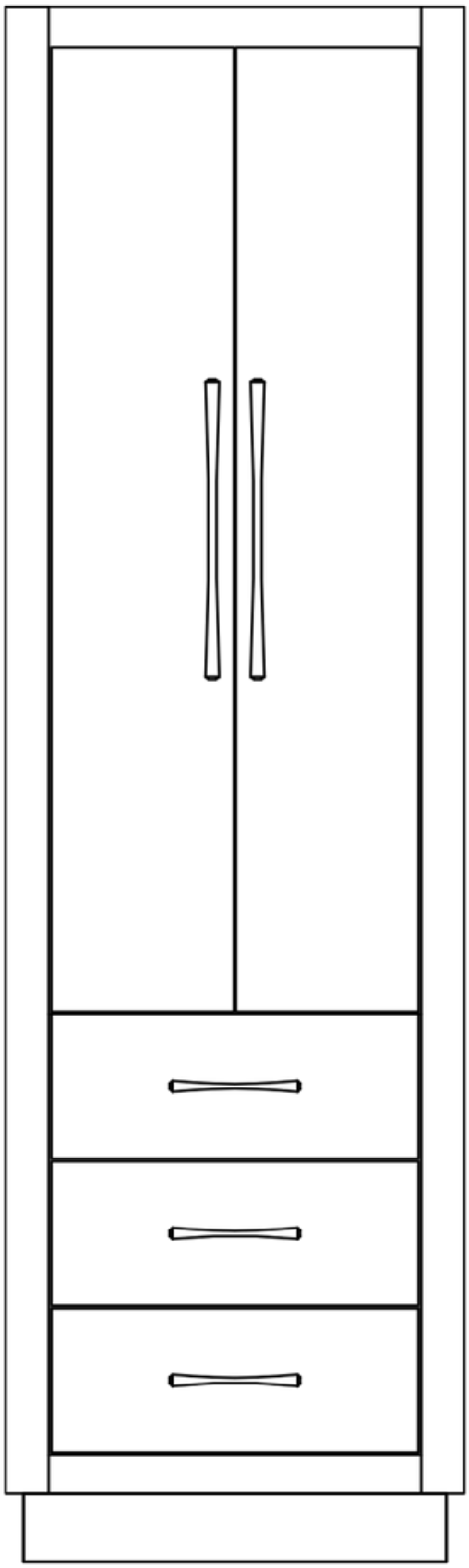

Video Instruction

PRODUCT FEATURES

- Soft closing doors and drawers
- 3 adjustable shelves
- 3 drawers
- Match it with Water Creation's Cirilla collection bathroom vanities for the perfect fit

TOOLS YOU WILL NEED

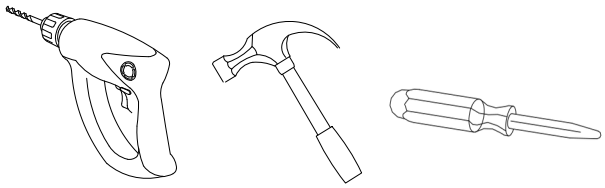

Drill w/ 1/4" drill bit (Not included)

Hammer (Not included)

Screwdriver (Not included)

SHARE YOUR DESIGNS WITH US!

Did a good job with the installation?
We would love to see how well you did!

Tag us with your design
@watercreation_inc & #mywatercreation

CIRILLA-LC

HARDWARE INCLUDED

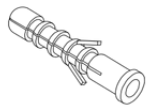			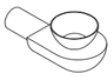
H1 - Wall Anchors x2	H2 - Long Screws x2	H3 - Scrwe Caps x2	H4 - Shelf Pin x12

CIRILLA-LC

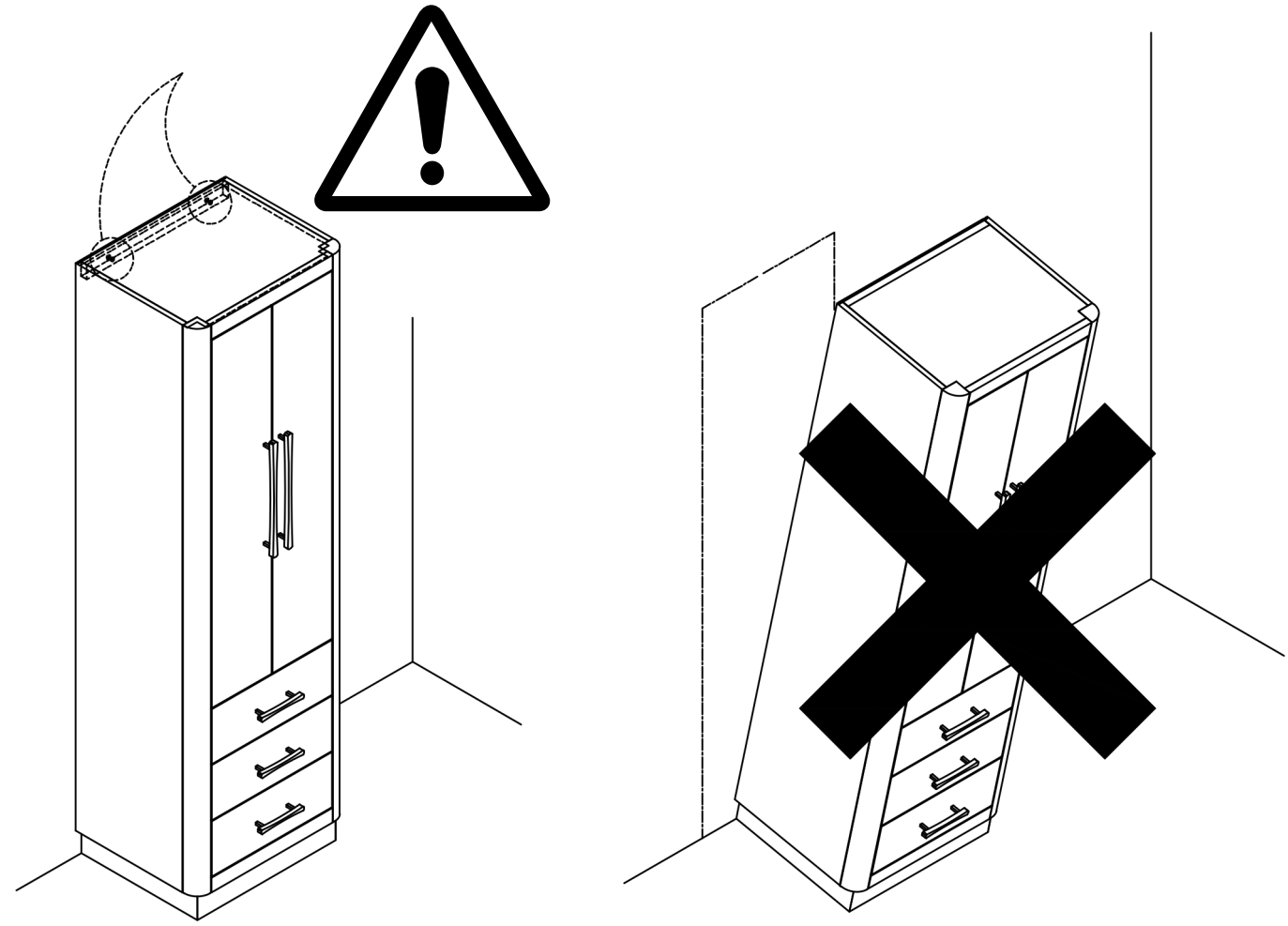

WARNING

Serious or fatal crushing injuries can occur from furniture tip-over. ALWAYS secure this furniture to the wall using tip-over restraints. To further reduce the risk of serious injury and death from tip-overs:

- Place heaviest items in the lower drawer.
- Do not set TVs or other heavy objects on top of this product.
- Never let children climb or hang on drawers, doors, or shelves.

CIRILLA-LC

Step 1:
Place Linen Cabinet against the wall in desired location. Mark positions on the wall for Wall Anchors (H1) using a pencil.

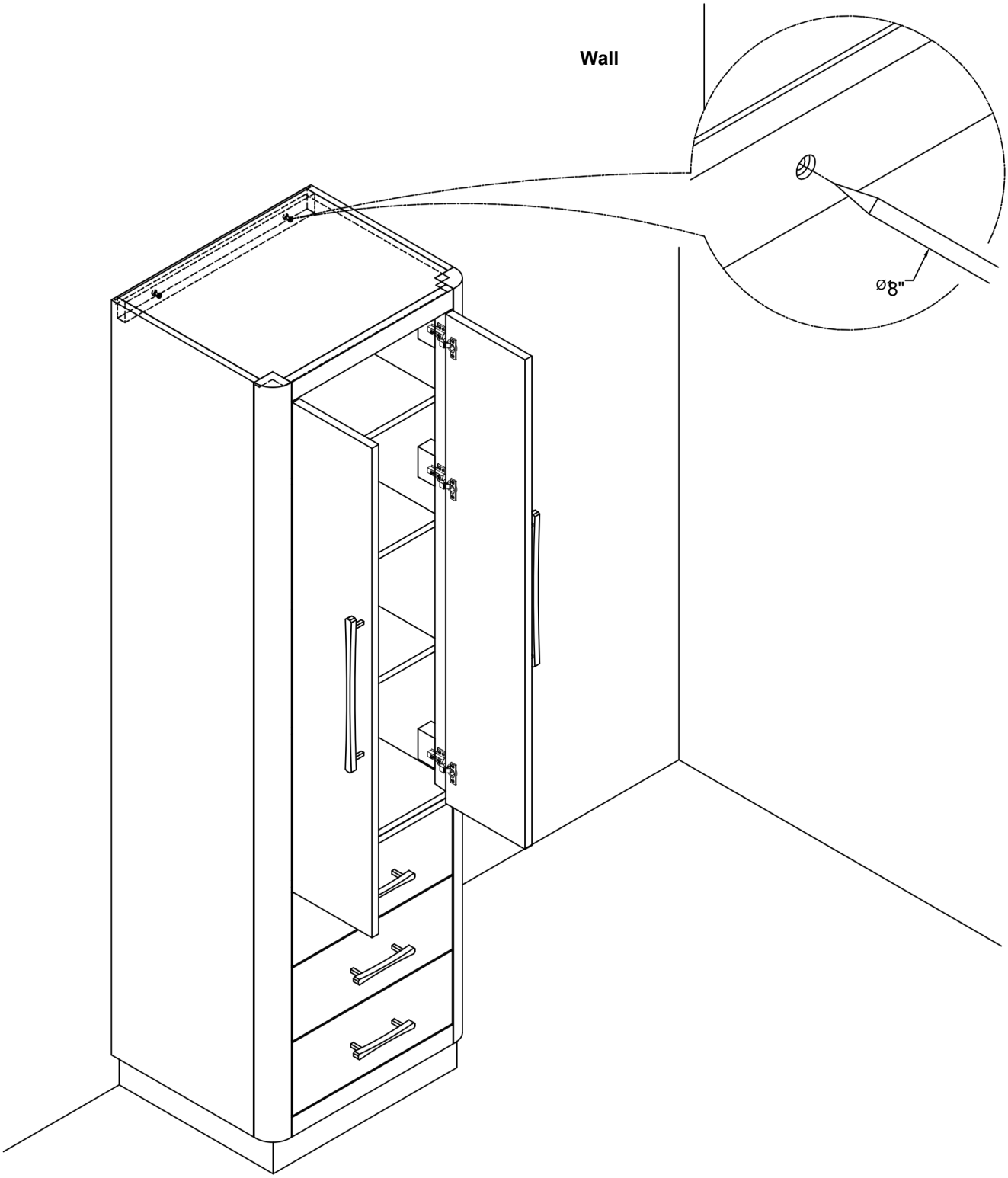

CIRILLA-LC

Step 2:
Move Linen Cabinet away from wall. Drill 2 holes 1/4" wide and 1 1/2" deep using a drill in the spots marked for the Wall Anchors (H1).

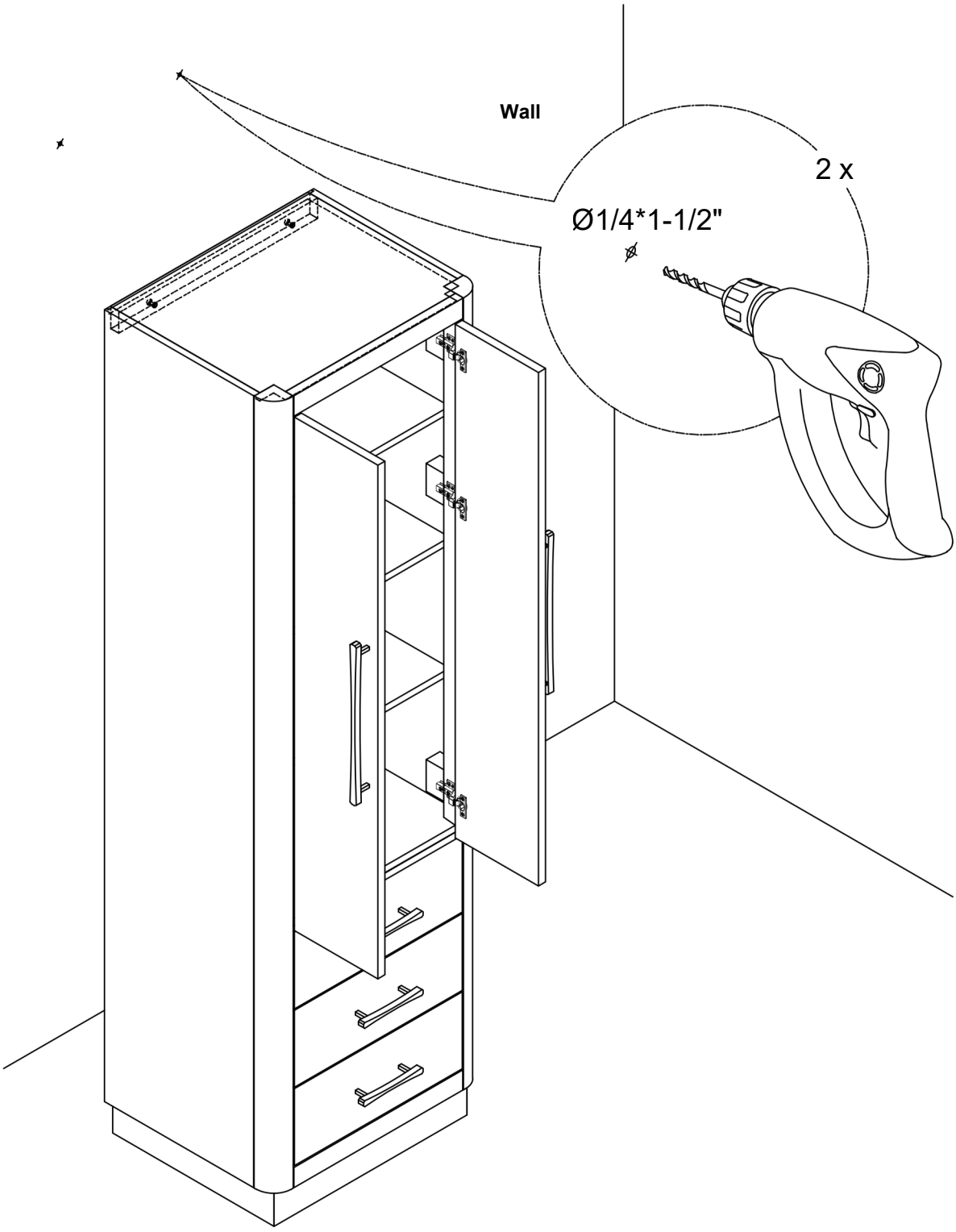

CIRILLA-LC

Step 3:
Insert Wall Anchors (H1) into the holes, use a hammer to make them flush against the wall.

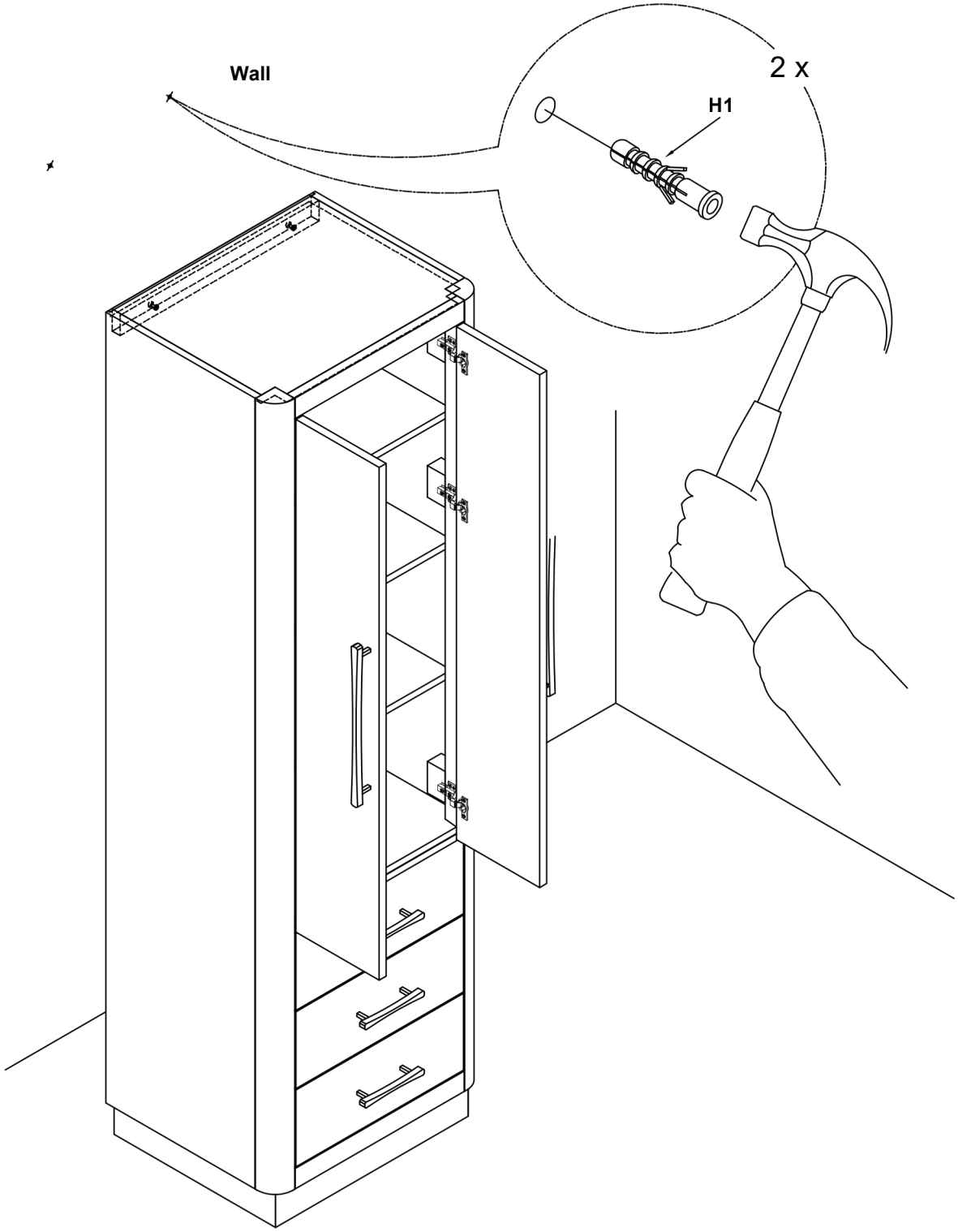

CIRILLA-LC

Step 4:
Place Linen Cabinet against the wall and align with Wall Anchors (H1). Use a screwdriver and Long Screws (H2) to fasten and hold Linen Cabinet against the wall.

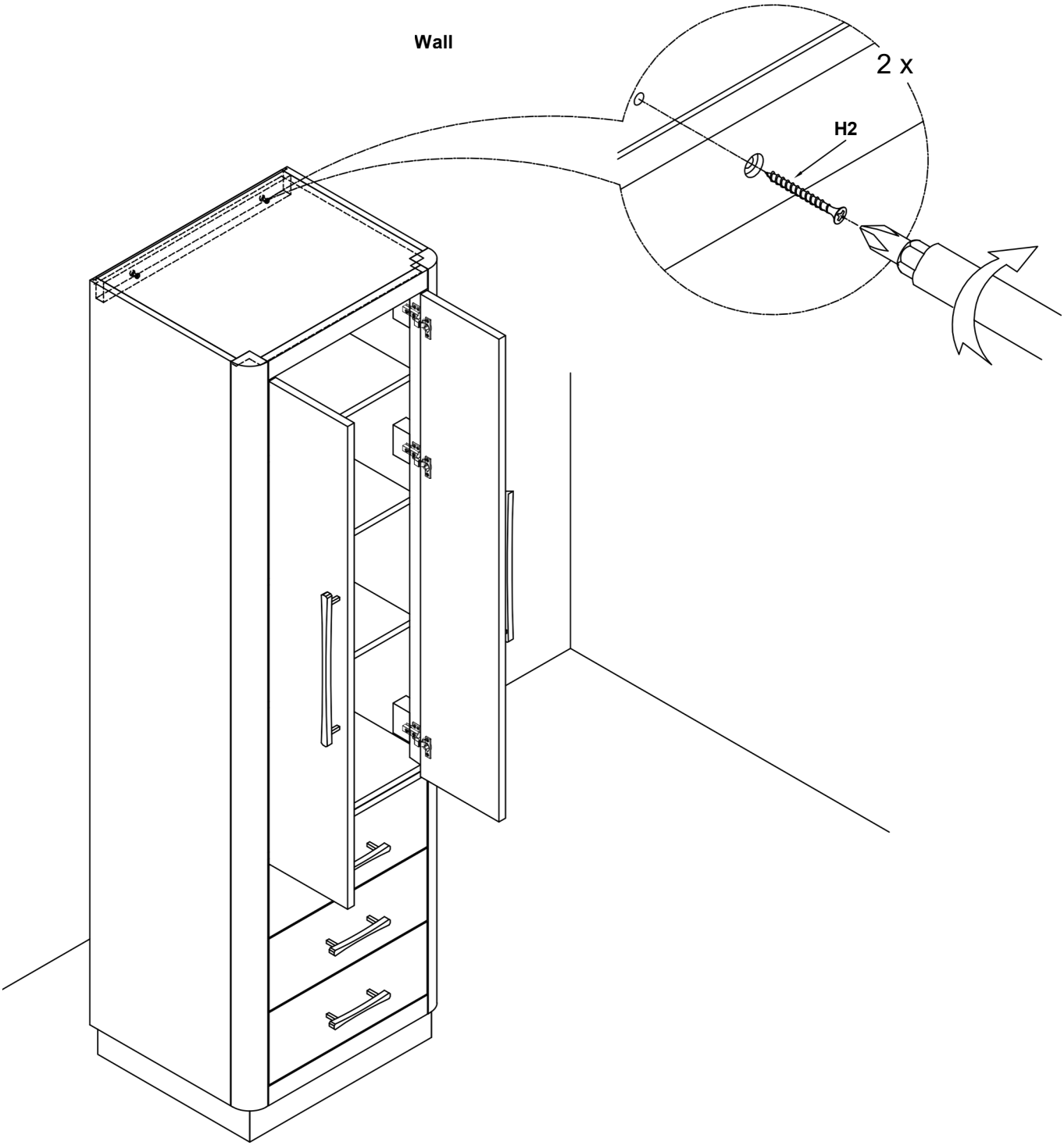

CIRILLA-LC

Step 5:
Cover screws with screw caps (H3) provided. Insert Shelf Pin (H4) in position on Side Frame and place Adjustable Shelf in position.

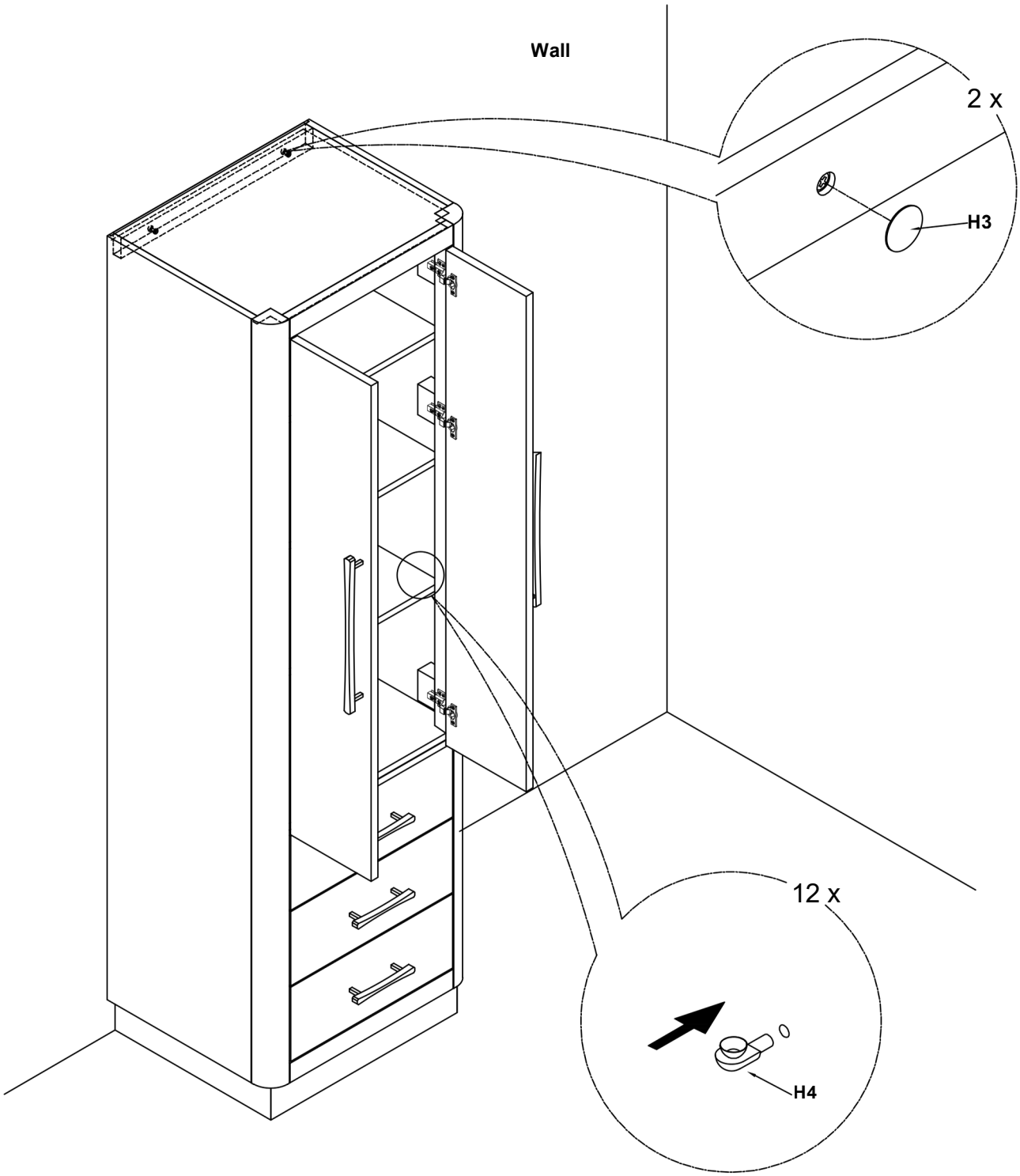

CIRILLA-LC

DIMENSIONS

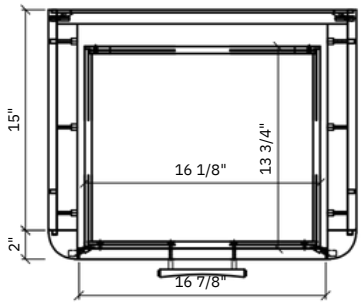

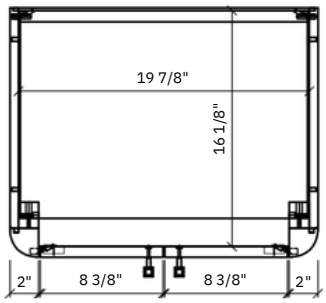

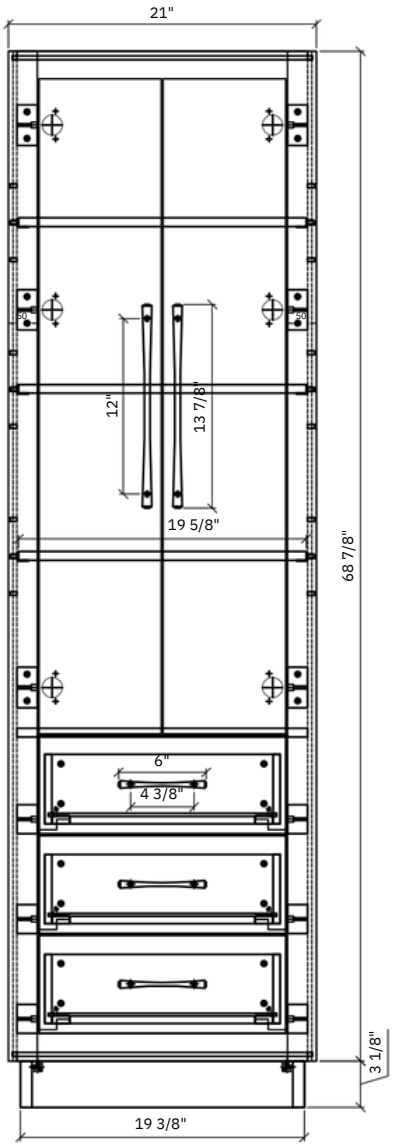

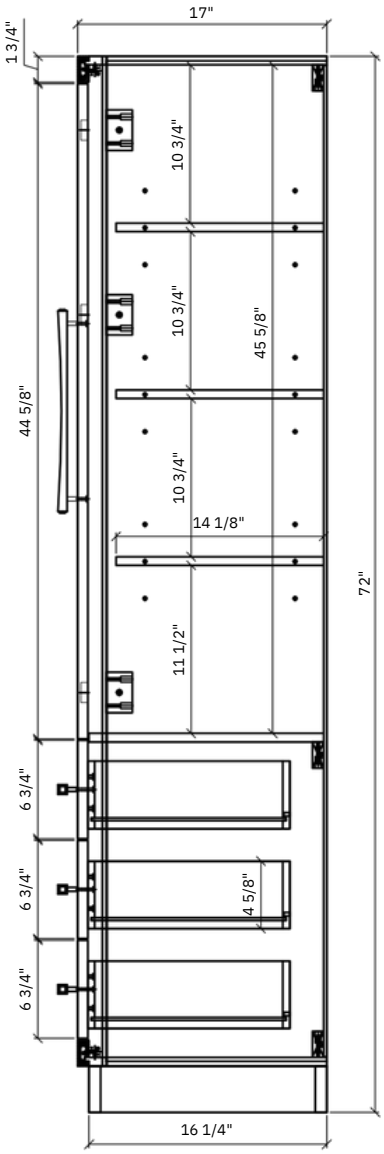

CIRILLA-LC

All Water Creation products carry a **One-Year Limited warranty** unless otherwise stated. The warranty is non-transferable.

BATHROOM VANITY / CABINET ONE-YEAR LIMITED WARRANTY
Water Creation products are warranted to be free of defects in material and workmanship for one (1) year from the date of purchase. The warranty commences from the initial date of purchase by the owner or trade professional, from an authorized Water Creation dealer, through the one (1) year term of the original owner or end-user. Water Creation will, at its discretion, repair, replace, or make appropriate arrangements to rectify such defects which occurred from normal usage within the one year. Water Creation is not responsible for any inspection, installation, modification, removal, or labor costs associated.

This warranty does not cover products exposed to improper use / installation / conditions or abuse in any way. "Improper use or conditions" includes, but is not limited to, damage from mishandling or misuse, damage from excessive heat, exposure to UV light, physical or chemical abuse, acid etching, staining or damage from improper care and maintenance or damage from chipping, cracking, impact damage or breaking due to customer abuse, normal wear and tear or acts of nature (such as, but not limited to, stains, scratches or chips). Water Creation is not responsible for any inspection, installation, removal, or labor costs associated.

Water Creation reserves the right to replace defective material with other similar materials in the event that the product protected under this warranty has been discontinued. Water Creation does not replace products resulting from damages occurring after delivery; during installation or storage of the product; improper storage/handling; water temperatures in excess of 150°; use of abrasive or improper cleaners or chemicals.

PRODUCT FINISH ONE-YEAR LIMITED WARRANTY
All product finishes offered by Water Creation carry a One (1) Year Limited Warranty against defects, with the exception of Polished Chrome, which carry a Limited Lifetime Warranty against defect. Physical damages and damages caused by accident, misuse, abuse or improper cleaning products are not covered by the warranty. Water Creation is not responsible for any inspection, installation, removal, or labor costs associated.

Scan for more information