SOLINTEG
INTEGRATE SOLAR INTELLIGENTLY

SOLINTEG ECA-B SERIES AC CHARGER

ECA-S07K-BS0
ECA-S11K-BS0
ECA-S22K-BS0



User Manual

ENGLISH VERSION


SOLINTEG
INTEGRATE SOLAR INTELLIGENTLY

IMPORTANT SAFETY INSTRUCTIONS

This document contains instructions including but not limited to installation, electrical connection, operation and maintenance of Solinteg ECA-B EV charger and warnings that must be followed when installing and using the Electric Vehicle Supply Equipment (EVSE).
Before installing or using the EVSE, read this entire document as well as WARNING and CAUTION markings in this document.

Safety Instructions

The symbols used have the following meaning:

	WARNING: RISK OF PERSONAL INJURY
	WARNING: RISK OF ELECTRIC SHOCK
	WARNING: RISK OF FIRE
	CAUTION: RISK OF DAMAGE TO THE EQUIPMENT

• EV charger must be installed, adjusted, and repaired only by a licensed electrician.
• Make sure that the materials used, and the installation procedures follow local regulation codes and safety standards.
• The information provided in this manual in no way exempts the user of responsibility to follow all applicable codes or safety standards.
• This document serves only as a guide to use, and all statements, information and recommendations in this document do not constitute any express or implied guarantee.
• This document provides instructions for Solinteg EV charger (ECA-B series) and should not be used for any other product.
• The breakers of all power supplies are requested to be off before installing this product, which means the breaker at both grid side and battery side should be off while DC switch of the inverter should be powered off.
• Before installation or use of this product, review this manual carefully and consult with a licensed contractor, licensed electrician, or trained installation expert to make sure of compliance with local regulation codes and safety standards.

CONTENTS

1 Safety Instructions 5

1.1 Safety 5

1.1.1 General Rules of Safety 5

1.1.2 Electrical Safety 6

1.1.3 Requirements for Installation Personnel 6

1.1.4 Safety Protection Measures 7

1.2 Disposing 7

1.3 Statement 7

2 Storage and Transportation 8

3 Product Description 9

3.1 Models 9

3.2 System Introduction 9

3.3 Product Appearance 9

3.4 Packing List 10

3.5 LED Status Indicators 10

4 Installation 13

4.1 Preparation for Installation 13

4.1.1 Installation Tools 13

4.1.2 Installation Environment 13

4.1.3 Power Supply Requirements 14

4.2 Installation Steps 16

4.2.1 Install AC Charger 16

4.2.2 AC Connection 22

4.2.3 Connection with MHT/MHS Series 24

4.2.4 Inspection after Installation 25

5 Operation Instructions 26

5.1 Operation Mode 26

5.2 App Commissioning 27

6 Troubleshooting and Maintenance 30

6.1 Troubleshooting 30

6.2 Cleaning and Washing 32

6.3 Regular Maintenance 32

7 Appendix 33

7.1 Technical Parameters 33

7.2 Contact Information 34

1 Safety Instruction

1.1 Safety

1.1.1 General Rules of Safety

• Please follow the instructions in this chapter, and familiarize yourself with all safety instructions and regulations.

• The installer must always ensure that the installation of the charger complies with local regulations.

• The installation, maintenance and repair of this product may only be performed by a trained electrician.

• The electricity transmission licensee shall be consulted prior to the commencement of any earthworks (for the purpose of installing structure, cables, earthing system, etc.) to prevent damage to any underground electricity cables under the management of the electricity transmission licensee.

	WARNING: RISK OF PERSONAL INJURY

• Please prevent incorrect operation steps, practices or execution.

• Improper installation or maintenance may be dangerous to users.

	CAUTION: RISK OF DAMAGE TO THE EQUIPMENT

• This product is designed and tested in accordance with international standards.

• This product can only be limited to its design purpose.

• All parts of the product cannot be repaired by the user. Do not attempt to repair the charger yourself.

• Do not install this product in potentially explosive environments, areas with high electromagnetic radiation and areas susceptible to flooding.

• Ensure that this product is used only under proper operating conditions.

• Do not use adapters or converting adapters.

• Do not use cable extension kits.

• Make sure the power cord connected to the charger is routed from the dedicated Type A RCBO or MCB+ Type A RCCB in the distribution box. The Type A RCBO or MCB+ Type A RCCB must match the capacity of the charging cable used.

• Please store this product in a dry environment, the storage temperature must be between -40°C ~ +55°C.

1.1.2 Electrical Safety



WARNING: RISK OF PERSONAL INJURY

• Improper installation or maintenance may be dangerous to users of this product.
• Any installation and maintenance operations must be carried out under the condition of power failure.
• All parts of the product cannot be repaired by the user. Do not attempt to repair the charger yourself.
• Do not install this product in potentially explosive environments, areas with high electromagnetic radiation and areas susceptible to flooding.
• Before installing this product, make sure that the main power supply has been disconnected, which means the breaker at both grid side and battery side should be off while DC switch of the inverter should turn off.
• Do not use adapters or converting adapters.
• Do not use cable extension kits.
• Where underground cable is to be installed for reticulation of electricity supply from the main intake switchboard to individual chargers in public area, care shall be taken to prevent possible damage to existing underground cables or services.
• Do not touch live electrical parts.
• Do not put fingers into the EV connector.
• Do not use this product if the flexible power cord or EV cable is frayed, has broken insulation, or any other signs of damage.
• Do not use this product if the enclosure or the EV connector is broken, cracked, open, or shows any other indication of damage.

1.1.3 Requirements for Installation Personnel

Only authorized technicians can install and maintain the product, and also they should possess the following qualifications:
• Understand and follow the safety instructions and sections related to product installation in this Manual.
• Understand and abide by governing local, national and international laws and regulations.
• Be able to identify the possible hazards of the product and to take necessary measures to protect personal and property safety.
• EVCS's owner or operator who has been trained, certified and has sufficient knowledge of relevant standards and requirements for the safe operation of the EVCS.

1.1.4 Safety Protection Measures

• Protective measures (PPE): Please wear personal protective equipment (PPE) when conducting installation work.
• Please wear insulating gloves when installing wires and electrical components to avoid damage arising from electrostatic discharge.
• Please wear the anti-static safety shoes of Level S3.
• Please wear goggles while drilling a hole to prevent dust or other particles from getting into eyes.
• Please wear safety earmuffs while drilling a hole to protect ears from noise.

1.2 Disposing

• Please divide different materials into recyclable materials, general waste and special waste before handling.
• Please abide by local laws and regulations and relevant provisions when recycling or handling products, individual components and packages.
• The disposed products with WEEE logos must be delivered to a place in which electrical and electronic devices are separately collected.

1.3 Statement

Solinteg Power Co., Ltd. has the right not to undertake quality assurance in any of the following circumstances:
① Damages caused by improper transportation.
② Damages caused by incorrect storage, installation or use.
③ Damages caused by installation and use of equipment by non-professionals or untrained personnel.
④ Damages caused by failure to comply with the instructions and safety warnings in this document.
⑤ Damages of running in an environment that does not meet the requirements stated in this document.
⑥ Damages caused by operation beyond the parameters specified in applicable technical specifications.
⑦ Damages caused by unauthorized disassembly, alteration of products or modification of software codes.
⑧ Damages caused by abnormal natural environment (force majeure, such as lightning, earthquake, fire, storm, etc.).
⑨ Any damages caused by the process of installation and operation which don't follow the local standards and regulations.
⑩ Products beyond the warranty period.

2 Storage and Transportation

	WARNING: RISK OF PERSONAL INJURY

• Do not store the EV charger in areas containing highly flammable materials or gases.
• Do not store the charger in potentially explosive atmospheres.
• It's important to protect them from water and moisture. Use waterproof packaging materials or avoid exposure to humid environments during storage and transportation.
• Do not dispose of the original packing case. It is recommended to store the device in the original packing case when the device is decommissioned.
• During transportation, ensure that the EV charger is securely fastened to the vehicle or transport container to prevent damage or tilting during movement.

3 Product Description

3.1 Models

The ECA-B series includes 3 models which are listed below:
ECA-S07K-BS0, ECA-S11K-BS0 and ECA-S22K-BS0

3.2 System Introduction

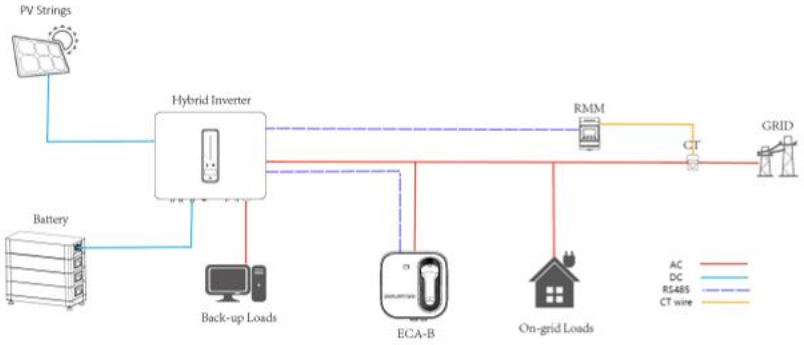

3.3 Product Appearance

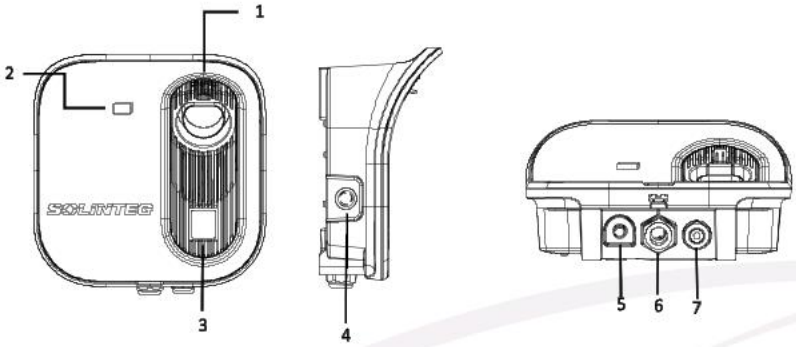

Item	Terminal	Note
1	LED light indicator	The status of EV charger can be judged by the color and flashing frequency of indicator.
2	RFID card	Start or stop EV charger by swiping RFID card.
3	QR code	Scanning the code can add EV charger to Solinteg platform.
4	Emergency button	Press the button, and EV charger will stop outputting. Rotate it clockwise to reset it.
5	EV charger cable port	The cable used to connect EV charger.
6	Power supply line port	The port that let L lines, N line and PE line go through.
7	Communication port	The port that lets communication cable connected with the inverter go through.

3.4 Packing List

No.	Equipment	Quantity	Content
1	Charger	1	/
2	Key	1	/
3	Mounting	1	M6*50 self-tapping screw*5 (1 for standby) Φ8*40 plastic expansion solenoid*5 (1 for standby)
4	RFID card	2	/
5	Waterproof connector	1	/
6	10m charger communication cable (1pcs), 0.5m inverter communication cable (1pcs)	1	/
7	Mounting accessory	1	Only available for ECA-S22K-BS0

No.	Equipment	Quantity	Content	
8	Pole (optional)	1	ECA-S7/11K-BS0	ECA-S22K-BS0
			Pedestal*1 Upper cross panel*1 Bottom cross panel*1 M6*16 Cross screw*7 (1 for standby) M4*12 Torx screw*3 (1 for standby) M3*10 Torx screw*3 (1 for standby) M10*120 Expansion screw*4 Cable cover*1 Trim cover*2	Pedestal*1 M6*16 Cross screw*10 (1 for standby) M4*14 Torx screw*5 (1 for standby) M3*10 Torx screw*3 (1 for standby) Countersunk screw*5 (1 for standby) M10*120 Expansion screw*4 Cable fixing plate*2 Cable cover*1 Trim cover*2

3.5 LED Status Indicators

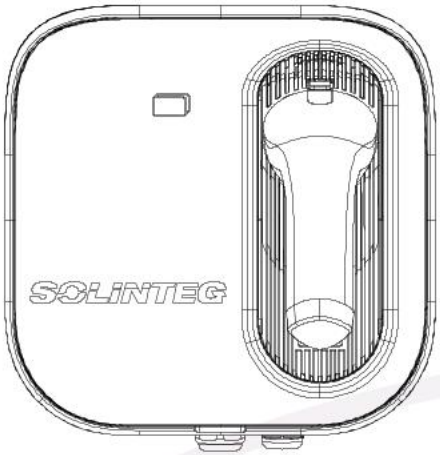

EV Charger LED Indicator

Item	Status		Description
1	Green	Slow Flashing cycle by 4 seconds)	The charger is in standby state without failure.
2	Blue	On	The charging cable is connected.
3		Quick Flashing (cycle by 0.125 seconds)	RFID card reading
4		Breathing	Charging in progress
5		Slow Flashing (cycle by 0.5 seconds)	The vehicle suspends/the terminal suspends (Suspend EV and suspend EVSE)
6	Red	Flashing	The charger is reporting alarm. The communication with the inverter is lost. The emergency button is pressed.

4 Installation

4.1 Preparation for Installation

4.1.1 Installation Tools

No.	Category	Name	Function	Picture
1	Cable processing	Electrician knife	Stripping of insulating layers	
2	Cable processing	Wire stripping pliers	Stripping of insulating layers	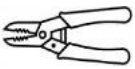
3	Cable processing	Crimping pliers	Terminal crimping	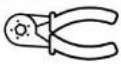
4	Installation tools	Percussion bit	Drilling	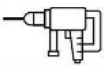
5	Installation tools	Open-end spanner (full set)	Installation and removal of nuts	
6	Installation tools	Phillips screwdriver (PH2,PH3)	Installation and removal of screws	
7	Installation tools	Slotted screwdriver (SL2)	Installation and removal of screws	
8	Installation tools	Hex keys (full set)	Installation and removal of screws	
9	Installation tools	Electric torque screwdriver (with full set of Phillips bits, hexagon screw bits and slotted screw bits)	Installation and removal of screws	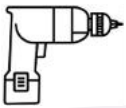
10	Installation tools	Manual torque screwdriver (with full set of Phillips bits, hexagon screw bits and slotted screw bits)	Installation and removal of screws	
11	Installation tools	Torque adjustable wrench	Installation and removal of nuts	
12	Installation tools	Wrench	Installation and removal of nuts	

No.	Category	Name	Function	Picture
13	Measuring devices	Spirit level	L establishing levelness	
14	Measuring devices	Tape measure	Distance measurement	
15	Marking tools	Pencil	Marking	

▼ 4.1.2 Installation Environment

Environmental condition	Suggested range
Ambient temperature	-30° C ~ +50° C
Altitude	≤ 3000m
Moisture	5%~95%RH, no condensation inside the product;
Degree of dust	≤ 1mg/m3
Vibration	≤ 1.5mm/s
Damp	Rain prevention
Fire resistance	No flammable substances on the top and bottom of cabinet

▼ 4.1.3 Power Supply Requirements

• Recommended Cable

It is recommended to use a flexible cable. If the incoming line is 6mm² flexible wire, KST E6012 pin type terminal or equivalent terminal is recommended; if the incoming line is 10mm² hard wire, KST E10-12 pin type terminal or equivalent terminal is recommended.

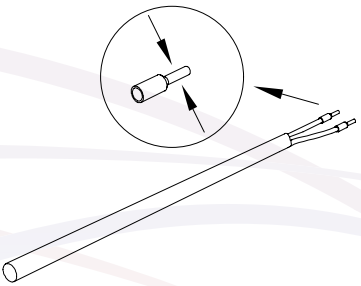

Applicable model	Cable requirements	
	Outside diameter	Wire gauge
ECA-S07K-BS0	13-18mm	6mm²
ECA-S11K-BS0	13-18mm	2.5mm²
ECA-S22K-BS0	13-18mm	6mm²

• Recommended supply Type A RCBO or MCB+Type A RCCB or MCB+Type A RCD for charger:
ECA-S07K-BS0: Ue=230V, In=40A, 3P.
ECA-S11K-BS0: Ue=400V, In=20A, 4P.
ECA-S22K-BS0: Ue=400V, In=40A, 4P.
Diagram of electrical system of product (7kW):

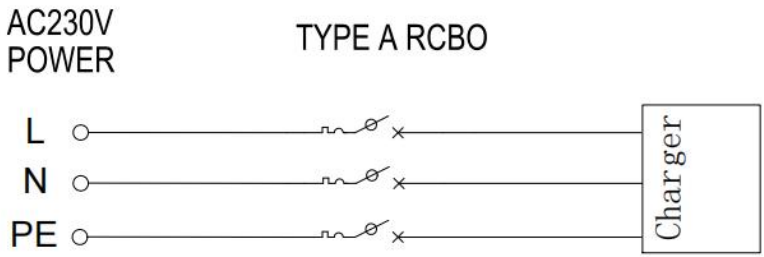

Diagram of electrical system of product (11kW/22kW):

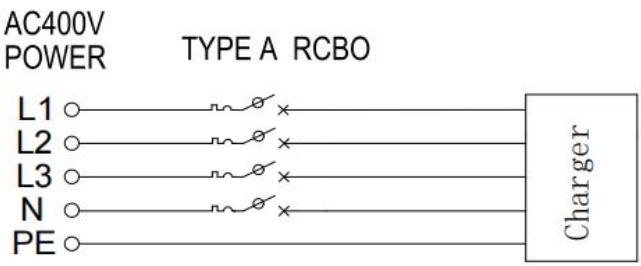

4.2 Installation Steps

▼ 4.2.1 Install AC Charger

4.2.1.1 ECA-S07/11K-BS0

Step1. No matter wall mounting one or pole mounting one, use the key to open the decorative cover of the pole.

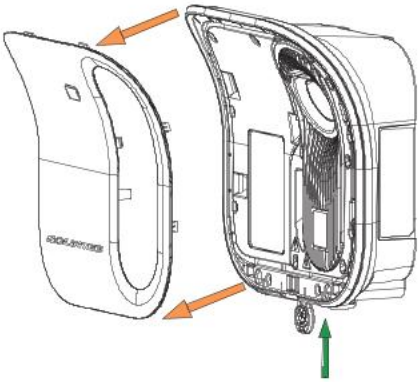

• If Wall Mounting

Step2. Please confirm and mark the installation position of the charging pole. The central position of the charging pole should be at least 0.85m above the ground.

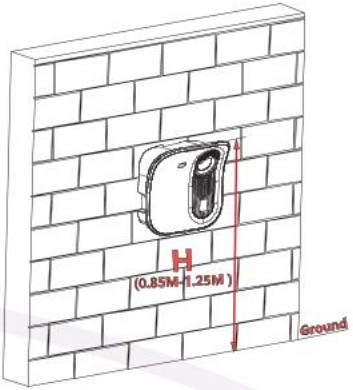

Step3. Use a Φ8 drill bit for the wall holes with 40mm deep, and insert 4 ϕ 8*60 expansion tubes, then put the top two expansion tubes into self-tapping screws (note: the top two self-tapping screws flange end distance is reserved about 6mm distance from the wall, can be used to open the key auxiliary calibration distance).

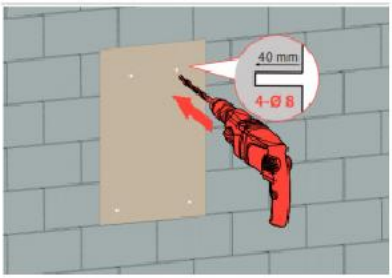

Mark mounting hole

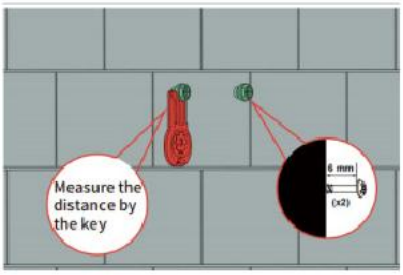

Installing expansion screws

Step4. Hang the pole on the top two extended screws, and insert the two self-tapping screws at the bottom through the front screw mounting hole of the pole to clamp the pole.



- **If Pole Mounting**

The general assembly drawing is shown as below.

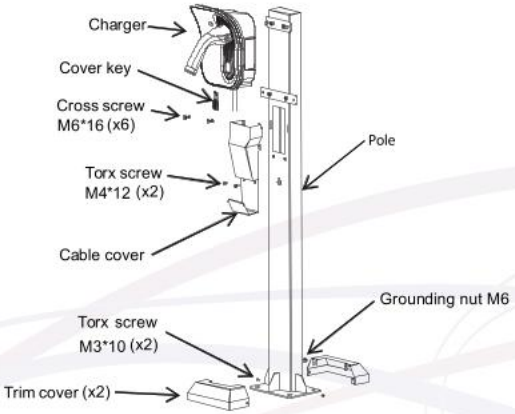

Tool list: Percussion drill, Cross Screwdriver, Tool hammer, Adjustable wrench, A set of Torx screwdriver with pillar core.

Step2. Before installing the pole, remove the trim cover and cable cover, and place the pole flat on the ground, put the charging cable through the cable inlet hole and the cable outlet hole.

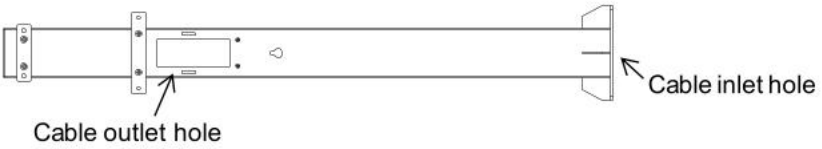

Step3. Fix the pole to the ground using M10*120 expansion screws, and tighten the grounding nut M6.

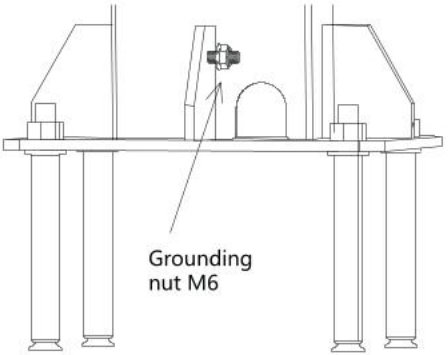

Step4. Hang the charger on the screws above the pole, and then drive two screws from the front to fix the charger.

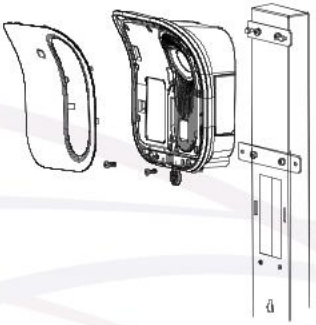

4.2.1.2 ECA-S022K-BS0

Step1. No matter wall mounting one or pole mounting one, use the key to open the decorative cover of the pole.

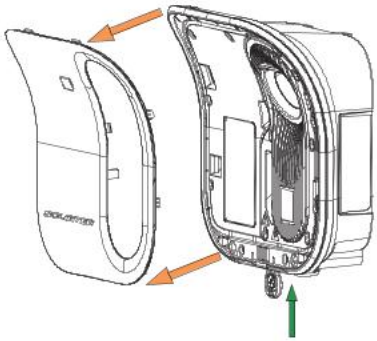

- **If Wall Mounting**

Step2. Please confirm and mark the installation position of the charging pole. The central position of the charging pole should be at least 0.85m above the ground.



Step3. Use a marking pen to mark the 4 installation hole positions of the mounting accessory on the wall, and then drill 4 holes with a diameter of 8mm and a depth of 50mm on the wall using an impact drill, and finally use 4 M6 * 50 expansion screws to fix the mounting accessory to the wall.

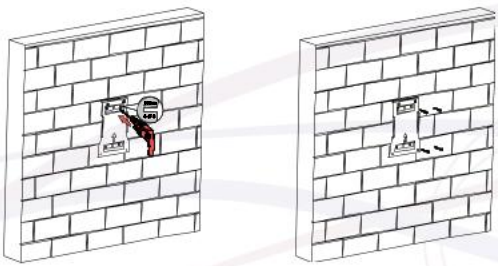

Step4. Hang the charger on the two extended screws at the top of the mounting accessory, and insert the two M6*16 screws at the bottom through the front screw mounting hole of the charger to fix the charger.

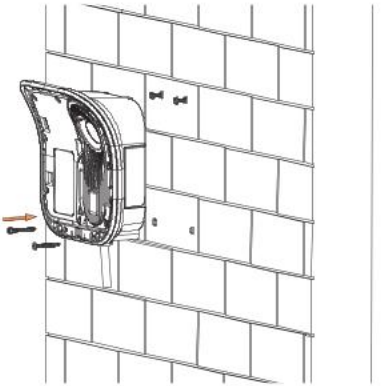

• If Pole Mounting

The general assembly drawing is shown as below.

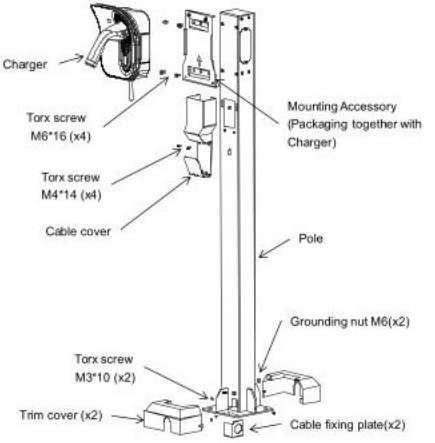

Tool list: Percussion drill, Cross Screwdriver, Tool hammer, Adjustable wrench, A set of Torx screwdriver with pillar core.

Step2. Before installing the pole, remove the trim cover and cable cover, and place the pole flat on the ground, put the charging cable through the cable inlet hole and the cable outlet hole.



This pole supports bottom and side incoming cables. When entering from the side, it is necessary to remove the cable fixing plate and rotate it 90 degrees counterclockwise, and then install it on the column bottom plate. The cable fixing plate supports the installation of one inch wave tube joints. (If threading from the bottom of the pole, the above steps are not required)

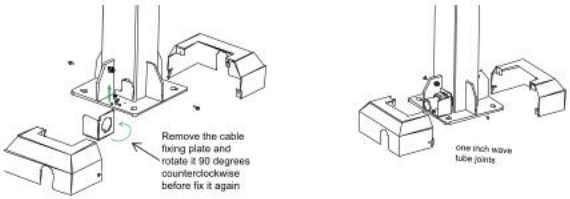

Step3. Fix the pole to the ground using M10*120 expansion screws, and tighten the grounding nut M6 to tighten the PE wire.

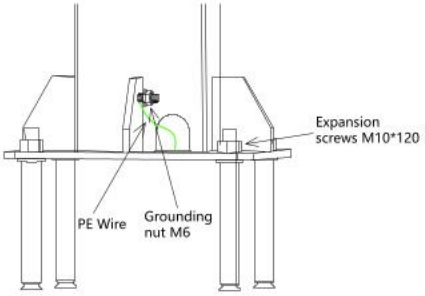

Step4. Fix the Mounting Accessory to the pole using M6*16 Torx screws.

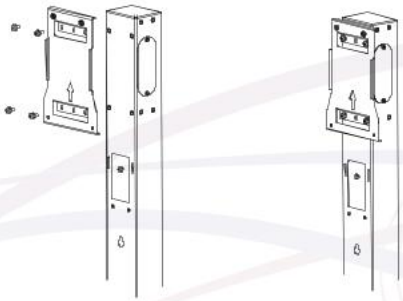

Step5. Hang the charger on the two extended screws at the top of the mounting accessory, and insert the two M6*16 screws at the bottom through the front screw mounting hole of the charger to fix the charger.

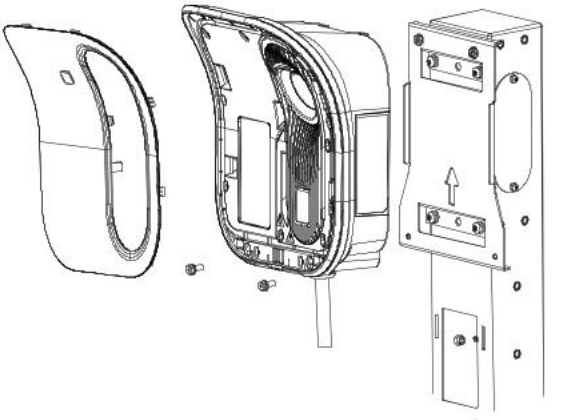

4.2.2 AC Connection

Before connecting power supply wire, remove the screws of the charging connector holder and dismantle the charging connector holder first and wiring window will display.

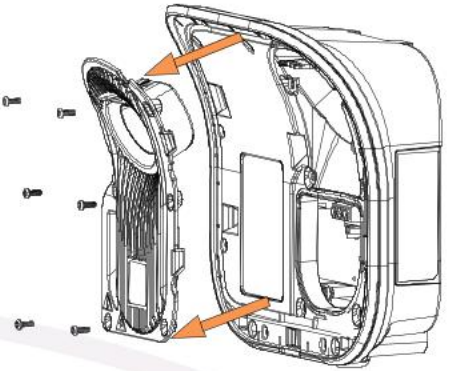

Charging Connector Holder Wiring Window

Find power supply terminal in the wiring window.

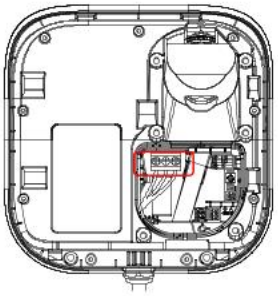

ECA-S07K-BS0

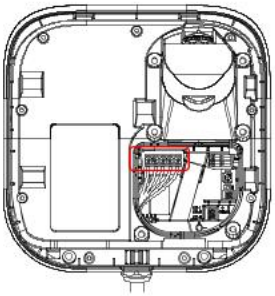

ECA-S11/22K-BS0

Different wiring modes of ECA-S07K-BS0 inlet lines are shown as below.

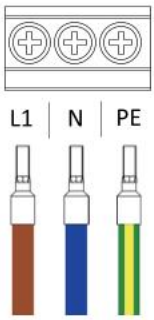

TN (230V)

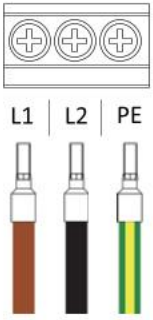

IT/TT (230V)

Different wiring modes of ECA-S11/22K-BS0 inlet lines are shown as below.

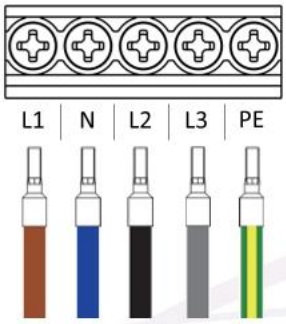

TN/TT (230/400V)

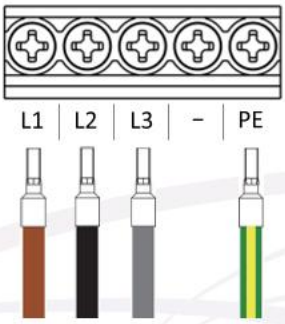

IT/TT (230V)

4.2.3 Connection with MHT/MHS Series

EV charger and battery use communication port of the inverter in common, and the general wiring diagram among the inverter, EV charger and the battery is shown as below:

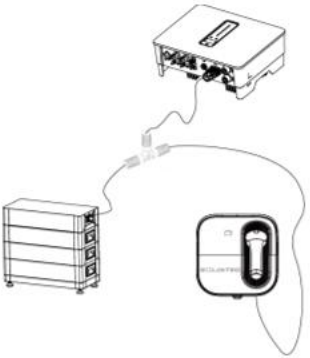

Connect inverter BMS port to “IN” port of waterproof connector via network cable labeled with “INV”.

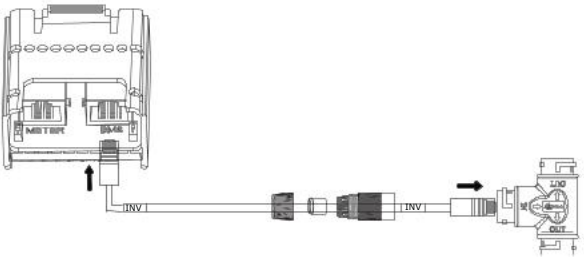

Connect communication port of battery to “OUT” port of waterproof connector via network cable labeled with “BMS”.

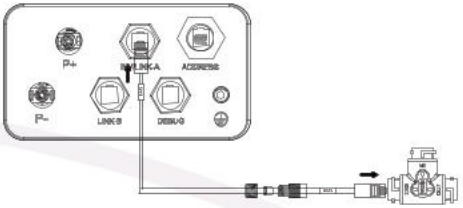

Connect RS485 communication port of EV charger to “OUT” port of waterproof connector via network cable labeled with “EVC”.

Please note that RS485 A and RS485 B can not be connected reversely which might lead to communication failure.

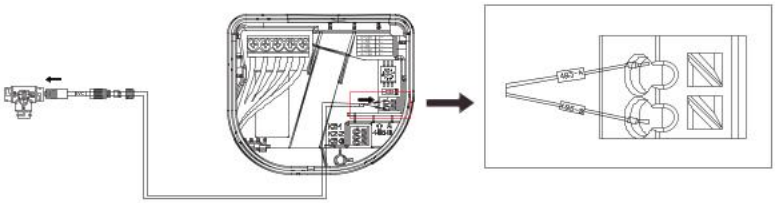

4.2.4 Inspection after Installation

① Handle all shipping and packaging materials in accordance with local laws and regulations;
② Remove the rubbish and debris around the charger. Do not leave tools on site or in the charger;
③ Clean the charger with an anti-static cloth and remove the dust on the surface;
④ Check whether the base is secure and sealed;
⑤ Check whether the parts inside the device are fixed reliably;
⑥ Use a multi-meter to check whether the electrical connection and wiring are correct, complete and secure;
⑦ Check whether the protection level of device meets the requirements, especially the cable inlet at the bottom of charger;
⑧ Check the appearance, marking, completeness and cleanliness;
⑨ After checking, reinstall the charging connector holder, tighten the screws, cover the decorative cover, and insert the charging connector into the connector holder like shown as below.

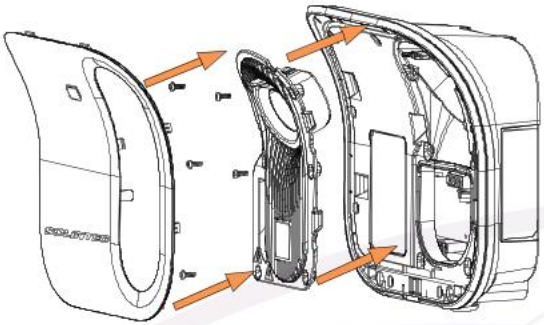

5 Operation Instructions

5.1 Operation Mode

Green Mode

In Green Mode, the EV charger will maximize the use of system surplus electricity. Once the sum of surplus power and the maximum grid charging power is greater than minimum start-up power of EV charger, EV charger will start to charge EV.

ECA-S07K-BS0 example table:

System surplus electricity (kW)	Maximum grid charging power (kW)	Actual charging power (kW)
3	2	3
1	2	1.4
0.5	0.5	0(Unable to start or stop charging)
0	2	1.4

ECA-S011/22K-BS0 example table:

System surplus electricity (kW)	Maximum grid charging power (kW)	Actual charging power (kW)
8	5	8
2	3.5	4.2
0.5	2	0(Unable to start or stop charging)
0	5	4.2

*System surplus electricity consists of power from PV and battery while battery power supply depends on whether battery is permitted to discharge, which is judged by whole system working mode and set value in “Battery Discharge Cutoff SOC”.

*Green Mode might fail to be activated when “export limit” is enabled.

*In Green Mode, after EV charger is activated, the actual charging power will depend on system surplus electricity and set value in “maximum grid charging power ”. As long as grid joins in to supply EV charger, it will charge electric vehicle at minimum start-up power.

*Generally speaking, minimum start-up power of EV charger are 1.4kW and 4.2kW for ECA-S07K-BS0 and ECA-S011/22K-BS0 respectively based on rated grid voltage 230V, but some electric vehicles will raise start-up power, which might lead EV charger to start at a higher value.

*If you are about to apply for government subsidies with this EVSE, please read the statements carefully to decide if the electric vehicle can be charged by the energy stored in the battery of the storage system.

Fast Mode

In Fast Mode, the EV charger will try to charge the electric vehicle at the rated power of EV charger regardless of whether the power generated by inverter is sufficient or import grid electricity if the power generated by inverter is insufficient.

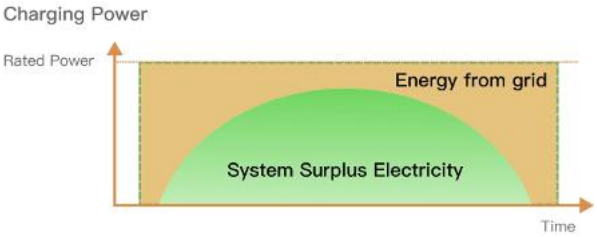

5.2 App Commissioning

Step1 Login

Before commissioning EV charger on App, please download the latest App on your smartphone by scanning the following QR code.

If you are a new user, please register an account first by tapping “Register account” at the bottom of interface.

Step2 Add EV Charger

Add EV charger to your account by scanning QR code on the nameplate.

Please make sure that the inverter has been connected to Internet and a plant has been created successfully at the beginning.

As long as EV charger is connected to the inverter properly and firmly, the inverter will be detected at the same time.

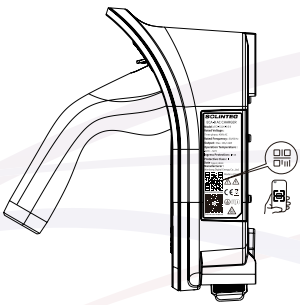

Step3 Set Parameters for EV Charger

➢ Touch info of EV charger to enter setting page.



➢ Select the working mode of EV charger (Fast Mode or Green Mode).



➢ Support charging in schedule. Set the desired charging time and charging mode, and then enable it.





➢ Fill in the value in “Advanced Settings”.

Main circuit breaker current limit: Please fill in the value shown on the nameplate of the breaker installed at the feed-in point. The actual executed current is the preset value minus 10A, thus prevent the situation of main breaker from tripping frequently due to overload.

*Please note that if set value is greater, the breaker will trip due to over-current, on the contrary, EV charge may not work normally, thus please fill in the value strictly obedient to the value shown on the nameplate of the breaker.

Battery Discharge Cutoff SOC: To prevent over-discharging of battery, when SOC reaches this value, the battery will stop discharging to supply electric vehicle.

Maximum grid charging power: The maximum power allowed taken from the grid to charge electric vehicle under green mode.



6 Troubleshooting and Maintenance

6.1 Troubleshooting

When a fault or a protection occurs, the corresponding error message will be shown on Solinteg cloud platform. The fault and protection are listed as below:

Error Message	Description	Solution
Emergency button has been pressed	Emergency button has been pressed	Please remove the connector out of the port of vehicle or the charging station and rotate the emergency button clockwise to reset it. If LED light indicator changes to green or blue, the fault has been recovered; otherwise, please contact technical support to check emergency button.
Grounding Fault	EV charger station has not been properly grounded.	Please contact technical support to check how the grounding is going based on the measured voltage between N line and PE line: Proper grounding:[0,40]V Improper grounding:[40,90]V Not grounded:[90,130]V Improper grounding+ reverse connection between L line and N line:[130,180]V Reverse connection between L line and Nline:[180,220]V
Over Temperature	1.Ambient temperature is too high. 2. Short circuit occurs.	1.Please provide shelter for EV charger station to avoid direct sunlight. 2.Please make EV charger station away from the heat source. 3.Please ensure ambient temperature lower than 40℃. 4.When ambient temperature is lower than 40℃, please restart EV charger and check if the issue has been recovered after 1 min. If the issue still exists, please contact technical support.
CP Error	1. Damaged charger cable 2. Issue caused by the vehicle	Please contact technical support to check if there is any destruction of insulation on charger cable or charging with another vehicle to check if this issue still exists.

Error Message	Description	Solution
Meter Error	Hardware issue	Please contact technical support to check meter chip and its circuit.
Under Voltage	AC input voltage is too low, which is lower than 150V.	Please contact technical support to check if distribution system is normal and it is necessary to contact local utility institution if input voltage is lower than 150V.
Over Voltage	AC input voltage is too high and needs to be maintained under 275V.	Please contact technical support to check if distribution system is normal and it is necessary to contact local utility institution if input voltage is higher than 275V.
Relay Sticking	Hardware issue	Please contact technical support to check relay circuit.
GFCI Protection	1. Damaged charger cable 2.PE and power supply line have been connected at the vehicle side. 3. Hardware issue 4.The leakage current is out of the range at the vehicle side.	Please contact technical support to check if there is any destruction of insulation on charger cable or charging with another vehicle to check if this issue still exists.
Over Current	Minimum charging current allowed by the vehicle is greater than the one allowed by EV charger.	Please check if power reduce is requested on EV charger station and if charging current needs to be changed on vehicle side. If so, please set minimum charging current allowed by vehicle smaller than the one allowed by EV charger.
Communication Fault with Inverter	Abnormal communication between inverter and EV charger.	1. Please check if the connection between the inverter and EV charger is well and proper. 2. Please ensure that EV charger is compatible with the inverter.

6.2 Cleaning and Washing

It is recommended that the housing of charger is regularly cleaned with a wet cloth. In addition, there should be no plants growing on or around the charger.

- Do not clean the product with a high-pressure water pipe;
- Do not clean the product with corrosive cleansers;
- Do not clean the inside of the product.

6.3 Regular Maintenance

The recommended maintenance cycle is shown in the table below.
If it is necessary to change the maintenance cycle according to the standards and regulations of the country where the charging device is installed and used, please comply with the local relevant laws and regulations.

Maintenance items	Maintenance cycle	Handling method
Cable	Yearly	Check whether the cable is tightly connected with the switch, whether the cable is hot or damaged, whether the insulation resistance of cable meets the provisions, whether the sealing measures of cable for entering the cabinet are intact, and whether holes are blocked tightly.
Indicator lamp	Yearly	Check whether the indicator lamp works normally and whether it is faulty.

7 Appendix

7.1 Technical Parameters

Model	ECA-S07K-BS0	ECA-S11K-BS0	ECA-S22K-BS0
General Information			
Charging Mode	Mode 3 (IEC 61851-1)		
Input Rating	230±15%Vac, 50/60Hz, single-phase, L+N+PE	400±15%Vac, 50/60Hz, three-phase, L1+L2+L3+N+PE	400±15%Vac, 50/60Hz, three-phase, L1+L2+L3+N+PE
Output Rating	7kW/ max. 32A	11kW/ max. 16A	22kW/max. 32A
Grid Type	TN-S, TN-C-S, TT, IT(L1+L2 230Vac Single phase)		
Charging Interface	IEC 62196-2 Type 2 tethered plug (Case C)		
Metering	Onboard metering chip		
Power Consumption	4W		
Residual Current Protection	DC 6mA		
Protection	Overcurrent, Overvoltage, Undervoltage, Residual current, Over temperature, Grounding fault, Integrated surge protection		
User Interface			
Status Indication	LED indicator		
Button & Switch	Emergency button		
User Authentication	RFID card, App		
RFID Reader	ISO 14443 A		
Communication			
Network Interface	RS485		
Protocol (EVSE&EV)	Control pilot		
Environmental			
Operating Temperature	-30℃ to 50℃		
Storage Temperature	-40℃ ~ +55℃		
Humidity	5% to 95% no condensation		
Altitude	≤3000m above sea level		

Model	ECA-S07K-BS0	ECA-S11K-BS0	ECA-S22K-BS0
Mechanical			
IP Rating	IP65		
IK Rating	IK10		
Cooling	Natural cooling		
Charging Cable Length	5m or 7m(optional)		
Dimensions (WxHxD)	280*280*148 mm(without Pole), 280*1210*201mm(with Pole)		
Weight	Approx. 4kg		Approx. 6.1kg
Installation	Wall Mounting, Pole Mounting		
Certification and Standards			
Standards and Compliance	IEC 61851-1, IEC 61851-21-2, LVD 2014/35/EU, RED 2014/53/EU, IEC 62955 (RCD), RoSH 2.0, REACH		
Certification	CE-RED, CB		

7.2 Contact Information

Should you have any question about this product, please contact us.

We need the following information to provide you the best assistance:

- Model of the device
- Serial number of the device
- Date of the device
- Fault code/name
- Brief description of the problem

China (HQ)

Solinteg Power Co., Ltd.

Address: Building H1-1001, No. 6 Jingxian Road, Xinwu District, 214135 Wuxi, Jiangsu Province, China

Website: www.solinteg.com

Service Mail: service@solinteg.com

INTEGRATE SOLAR INTELLIGENTLY

SOLINTEG

www.solinteg.com

M11-00056-00