KSTAR

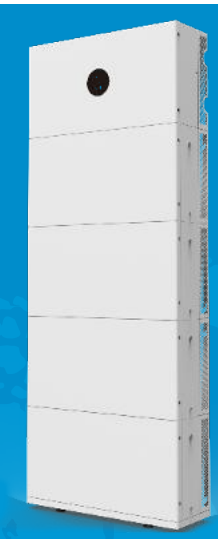

INSTALLATION, OPERATION & MAINTENANCE MANUAL

E3.68KS-D22 / E5KS-D22/ E6KS-D22 Series

ENERGY STORAGE SYSTEM

202506|Ver:1.0

Table of Contents

1 ABOUT THIS MANUAL 3

1.1 Purpose 3

1.2 Intended Audience 3

1.3 Conventions 4

1.4 Change History 4

2 SAFETY INSTRUCTIONS 5

2.1 Limitation of Liability 5

2.2 Warning Signs 6

2.3 Battery Safety 8

2.4 Before Installation 11

2.5 Installation Safety 13

2.6 Operation Safety 15

2.7 Maintenance Safety 18

2.8 Disposal Safety 19

3 PRODUCT INTRODUCTION 20

3.1 Features 20

3.2 Delivery Scope 20

3.3 Model 21

3.4 Inverter Appearance 22

3.5 External ports on the inverter 22

3.6 Battery Pack Appearance 24

3.7 Battery port information 24

3.8 Energy Management System (EMS) 26

3.9 Parallel System 26

3.10 Scenarios 27

3.11 Wiring Diagram 31

3.12 System States 33

3.13 Working Modes 34

4 INSTALLATION 36

4.1 Checking the Package 36

4.2 Preparing Tools and Instruments 39

4.3 Installation Position Requirements 40

4.4 Installing the System 43

4.5 Installing a Parallel System 63

5 COMMISSIONING 67

5.1 Checking Before Power-on 67

5.2 Powering On 67

5.3 Setting Common Parameters for the System 68

5.4 Checking the Settings 69

5.5 Powering off 70

6 SYSTEM OPERATION 70
6.1 Download APP and registration 70
6.2 Local Mode 71
6.3 Operating Battery Packs 96
7 MAINTENANCE 98
7.1 Inspection Checklist for Users 98
7.2 Inspection Checklist for Professional Personnel 99
7.3 Troubleshooting 99
8 STORING AND RECHARGING BATTERIES 110
8.1 Storage Environment Requirements 110
8.2 Interval for Recharging Batteries 110
8.3 Recharging a Battery 111
9 LIMITED WARRANTY 112
9.1 What This Warranty Covers 112
9.2 How to Obtain Warranty Service 112
9.3 Customer Responsibility for Warranty Service 112
9.4 Limitation of Liability 113
10 EMERGENCY PROCEDURE 114
10.1 General Handling 114
10.2 Potential Emergencies 114
10.3 Emergency Handling Plan 116
11 DISPOSAL 117
12 SPECIFICATIONS 118
12.1 Hybrid Inverter 118
12.2 Battery Terminal Input /Output 119
12.3 PV Input 119
12.4 Grid Terminal Input / Output 120
12.5 EPS Load Terminal Output 120
12.6 Battery Pack 121
13 ABBREVIATIONS 123
14 APPENDIX: DEFINITION OF DVC 125

Legal Statement

© Shenzhen KSTAR New Energy Company Limited. 2024. All rights reserved.

All material appearing on this manual (“content”) is the property of Shenzhen KSTAR New Energy Company Limited (“KSTAR New Energy”). Distributing, copying, or forwarding any content to a third party or uploading any content to third-party platforms (such as publicly accessible websites) without prior permission of KSTAR New Energy is expressly prohibited.

Trademarks and Permissions

KSTAR and other KSTAR trademarks used in this manual are owned by Shenzhen KSTAR New Energy Company Limited.

All other trademarks or registered trademarks are the property of their respective owners.

Software License

KSTAR New Energy reserves all rights to the firmware and software. You may not use any of the data in the firmware or software for commercial purposes in any way.

Reverse engineering, decompiling, disassembling, adapting, implanting, or other derivative operations on the equipment are prohibited, as are researching the design and implementation of the equipment, obtaining the source code, infringing on intellectual property rights in any way, and disclosing the results of any performance tests.

Disclaimer

Before transporting, storing, installing, using, and/or maintaining the equipment, read this manual, adhere strictly to its prescriptions, and pay attention to the labels on the equipment.

In this manual,

- “Equipment” refers to the hardware products, firmware, software, components, spare parts,
- And /or services to which this manual relates.
- “You” or “your” refers to an individual or a legal entity transporting, storing, installing, using, and/or maintaining the equipment.

In addition to paying proper attention to content in this manual labelled DANGER, WARNING, CAUTION, and NOTICE, you shall comply with relevant international, national, or regional standards, and industry practices. KSTAR New Energy shall not be liable for any damages resulting from violations of safety requirements or safety standards for the design, manufacturing, and use of the equipment.

KSTAR New Energy is not responsible for damage, personal injuries, death, and/or loss of or damage to property caused by use outside the scope of the conditions, technical specifications, or instructions provided in this manual.

Transport, storage, installation, use, maintenance, and all other operations shall comply with applicable laws and regulations, standards, and specifications.

KSTAR New Energy shall bear no liability in any of the following circumstances:

- The equipment is damaged due to earthquakes, floods, volcanic eruptions, mudslides, lightning strikes, fires, wars or armed conflicts, typhoons, hurricanes, tornadoes, extreme weather, or other force majeure events.
- The equipment is used outside the scope of the conditions, technical specifications, or instructions provided in this manual.
- Installation and/or use do not comply with relevant international, national, or regional standards or regulations.
- The equipment is installed or operated by unqualified personnel.
- The equipment is operated in a manner not in accordance with the prescriptions of the instruction manual and safety labels.
- The equipment and/or software code is disassembled and/or modified without the permission of KSTAR New Energy.
- The equipment is damaged while being transported by you or a third party commissioned by you.
- The equipment is stored in conditions that do not meet the standards specified in this manual.
- In the course of operating or maintaining the equipment, you use your own materials and tools that do not meet the requirements of local laws, regulations, and standards.
- Damage is caused by you or a third party through negligence, willful misconduct, gross negligence, or mishandling, or for other reasons not attributable to KSTAR New Energy.

1 About This Manual

This manual contains important information on the transport, storage, installation, use, and maintenance of the equipment. Read this manual carefully before operation. You must use the equipment strictly in accordance with the instructions in this manual to prevent damage or loss to the equipment, persons, and/or property. Keep this manual for future reference.

1.1 Purpose

This manual is intended as:

- An introduction to a three-phase hybrid inverter (the E3.68KS-D22/E5KS-D22/E6KS-D22),and the BP48100P (F)1-G2 lithium-ion battery pack.
- An installation and maintenance guide for qualified personnel and technicians working with the hybrid inverters.
- An operating guide for qualified personnel, technicians, and users of the energy management system (EMS) integrated in the hybrid inverter.

This manual does not include information on all the components in a photovoltaic system. For more information, visit www.KSTAR.com or the websites of the component manufacturers.

1.2 Intended Audience

The intended audience of this manual is:

- The qualified professional personnel and technicians who install, operate, and maintain residential photovoltaic energy storage systems that include an E3.68KS-D22/E5KS-D22/E6KS-D22 hybrid inverter, and/or the BP48100P (F)1-G2 battery pack.
- Users who need to view inverter parameters.
- System integration solution providers.

1.3 Conventions

The following symbols are used in this manual to highlight important information.

DANGER	Indicates a hazardous situation that, if not avoided, will result in death or severe injury.
WARNING	Indicates a hazardous situation that, if not avoided, could result in death or severe injury.
CAUTION	Indicates a hazardous situation that, if not avoided, could result in minor or moderate injury.
NOTICE	Indicates information that is considered important but is not hazard related, typically used for activities that result in property damage, but no personal injury.
NOTE	Indicates an important tip that leads to the best results, but not safety or damage related.

1.4 Change History

Here is the change history of this manual.

Version	Date	Changes
1.0	2025-06	• Initial release.

2 Safety Instructions

All the safety instructions in this section help you transport, store, install, use, and maintain the equipment safely, so be sure to read and follow them. In addition to these safety instructions, you must comply with the requirements of international, national, or regional standards and regulations, and you are encouraged to follow industry best practices.

The equipment must be transported, installed, and maintained by trained professionals who fully understand how the equipment works, have sufficient training and experience in operating the equipment, and know the possible dangers and their levels. Trained personnel are those who have received relevant technical and safety training and have relevant experience. They know the possible dangers they may face when operating the equipment and how to take steps to minimize the dangers to themselves and others.

2.1 Limitation of Liability

KSTAR New Energy is not responsible, directly or indirectly, for any damage to the equipment or loss of property caused by the following:

- Disassembling and/or modifying the equipment, replacing parts, or modifying the software code without the permission of the manufacturer.
- Altering, repairing, and erasing serial numbers or seals by technicians not certified by the manufacturer.
- Installation and/or operation of the equipment by unqualified personnel.
- Installing the inverter in any way that does not comply with standards or regulations.
- Failure to comply with local safety regulations. For example, in Germany, equipment must comply with VDE certification and in Australia it must comply with SAA certification.
- Operation of the equipment in an environment with insufficient ventilation.
- Use not in accordance with the instruction manual, technical specifications, and/or any other instruction provided.
- Use of your own materials and tools that do not meet the requirements of local laws, regulations, and standards.
- Failure to follow standard maintenance procedures.
- Earthquakes, floods, volcanic eruptions, mudslides, lightning strikes, fires, wars, armed conflicts, typhoons, hurricanes, tornadoes, extreme weather, or other force majeure events.

Additionally, KSTAR New Energy is not responsible, directly or indirectly, for:

- Damage sustained during transportation, including paint scratches caused by friction inside the package during transportation, and damage sustained while being transported by you or a third party commissioned by you. You must file claims with the shipping or insurance company when the container and/or the package is unloaded and the damage is confirmed.

- Any other damage caused by you or a third party through negligence, willful misconduct, or mishandling, or for other reasons not attributable to KSTAR New Energy.

2.2 Warning Signs

The warning signs and nameplates attached to the equipment contain important information to guide you in safe use of the equipment. DO NOT remove, obscure, or damage these signs. Make sure that these signs are always intact and fixed in their correct positions. If a warning sign is damaged, contact the manufacturer and have it replaced immediately by certified technicians.

You can see these warning signs attached to the equipment.

	Indicates a hazardous situation that, if not avoided, can result in death or severe injury!
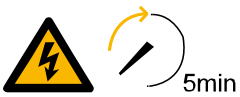	Indicates that the inverter should NOT be touched or used for at least five minutes after it is turned off or disconnected, in order to prevent electric shock or personal injury.
	Indicates a hot surface. Contact can cause burns.
	Indicates that you should read the user manual for instructions.

⚠ WARNING

After the equipment is unpacked,

- Check all the warning signs and nameplates on the equipment.
- If you find any damages to the warning signs and/or nameplates on the equipment, contact the manufacturer immediately and DO NOT install the equipment.

⚠ WARNING

Before disposal, make sure that all warning signs and nameplates are clearly visible and are not removed or obscured.

⚠ WARNING

When you instruct others in use of the equipment, and maintain and/or repair the equipment, follow these instructions to prevent inappropriate use or accidents caused by uninvolved persons:

- Place clear signs at the front and rear-level switches to prevent accidents caused by inappropriate switching.
- Place a warning sign or safety caution tape around the operating area.

2.3 Battery Safety

A rechargeable lithium-ion phosphate battery is used in the equipment. The battery complies with the provisions of “United Nations Recommendations on the Transport of Dangerous Goods, Manual of Tests and Criteria, Part III, Section 38.3”.

KSTAR New Energy shall not be responsible for:

- Damages to the battery caused by earthquakes, floods, volcanic eruptions, mudslides, lightning strikes, fires, wars, armed conflicts, typhoons, hurricanes, tornadoes, extreme weather, or other force majeure events.
- Direct damage caused by operation of the equipment in environments other than the intended operating environment. Indicators of inappropriate environments include, but are not limited to, excessively high or low operating temperatures, instability of the power grid, and frequent power outages.
- Damage, leakage, and/or rupture caused by inappropriate operation or failure to connect the battery pack in accordance with requirements.
- Damage caused by over-discharge of the battery due to the failure of operating personnel to promptly power up the battery after it has been connected to the system.
- Damage caused by your failure to accept the battery in time after installation.
- Damage caused by inappropriate parameters that you set.
- Accelerated battery capacity degradation caused by mixing of batteries, including, but not limited to, the mixing of batteries of different brands and mixing of batteries with different rated capacities.
- Battery damage caused by storing the battery in an unintended environment, such as in a humid, rain-prone environment.
- Loss of capacity or irreversible damage to the battery caused over-storage without recharging the battery in a timely manner.
- Damage caused by your or a third party’s failure to follow the requirements specified by the manufacturer, including, but not limited to, unauthorized relocation and installation of the battery packs.

KSTAR New Energy shall not be responsible for damage caused by:

- Frequent over-discharge of batteries caused by your inappropriate maintenance, on-site expansion, or long-term failure to fully charge.
- Lack of appropriate maintenance in accordance with the operating manual. Such battery maintenance should include, but is not limited to, regular checks of the battery terminal screws to verify tightness.
- Changing the battery usage scenario without the approval of the manufacturer.
- Unapproved connection of additional loads to the battery.
- Batteries exceeding the maximum storage life.
- Batteries exceeding the warranty period. Such batteries can pose hazards and it is not recommended that you continue to use them.

2.3.1 General Instructions

The chemical substances inside the battery are well sealed, so there is no physical danger of fire or explosion or chemical danger of hazardous material leakage at normal temperatures and pressure levels during handling. If the battery pack is exposed to fire, mechanical shock, decomposition, or increased electrical stress due to misuse, then leakage, release of harmful substances, and/or explosion can occur. The released substances can irritate the eyes, skin, and throat.

⚠ DANGER

- Only trained professionals are permitted to handle leaking batteries.
- When handling leaking batteries, personnel must wear goggles, rubber gloves, gas masks, and protective clothing.
- When handling leaking batteries, personnel must first disconnect the equipment and then remove the leaking batteries.
- Batteries should be protected from the following:
  - Short circuit caused by live line maintenance or by shorting the positive and negative terminals of the battery.
  - Exposure to high temperature or heating equipment, such as direct sunlight, ignition sources, transformer or heaters.
  - Squeezing by an external force or immersion in water or other liquids.
  - Over-charging or forced over-discharging.
  - Exposing battery terminals to other metal objects.
  - The use of incorrect battery types.

⚠ WARNING

Batteries should be protected from the following:

- Malfunctions or short circuits caused by liquid entering the battery. Therefore, DO NOT install the battery pack under air conditioning outlets, ventilation vents, machine room outlet windows, water pipes, and other locations prone to water leakage.
- Inverted, sideways, tilted, or stacked placement.
- False connection of fastening screws of the copper row and/or the cable, which can cause excessive voltage drop or the generation of a large amount of heat at higher current, which could burn the battery.

2.3.2 Maintenance of Battery Packs

DANGER

- DO NOT perform live line maintenance on the batteries to prevent short circuit.
- Use the specified type of battery during replacement.

WARNING

- Do a regular check on the fastening screws of copper rows and/or cables. Make sure that they are tightened and free of rust, corrosion, or other foreign objects. If they are not, clean them.

2.3.3 Disposal of Battery Packs

WARNING

- Before disposal, completely discharge the battery and consume the lithium metal inside the battery.
- DO NOT treat unwanted batteries as ordinary waste.
- DO NOT throw the battery pack into fire or place them in high temperature.
- DO NOT dissect, pierce, or crush the batteries.
- If a battery pack is deformed, broken, or leaking, discard it immediately regardless of how long it has been in storage.

2.4 Before Installation

⚠ DANGER

- Follow the safety instructions in this manual to prevent personal injury and/or property damage.
- During transportation, a certified ABC fire extinguisher with a capacity of at least 2 kg must be with the equipment.
- Smoking is not permitted on or near the vehicle while loading or unloading.
- Before installation, make sure that the equipment is free of any electrical connections.
- Make sure that no water pipes are inside the wall on which the system is to be mounted.
- To prevent possible electric shock, make sure that the inverter is not damaged and that the inverter and all switches connected to it are set to the “OFF” position.
- Before installation, use a properly calibrated voltage meter to test the inverter to prevent personal injury or damage caused by a life-threatening voltage.
- The PV string exposed to sunlight can generate high voltage. Do these to prevent personal injury:
  - The operator must wear personal protective equipment before electrical connection.
  - Before touching DC cables, use a measuring device to make sure that the cables are not energized.
  - Read the safety instructions attached to the PV string and its manuals.
  - DO NOT connect the inverter to a PV string that requires positive or negative grounding.

⚠ WARNING

- DO NOT transport equipment in severe weather such as lightning, rain, snow, or winds of force 6 or higher.
- If there is a fire, evacuate the building or equipment area and ring the fire alarm. DO NOT enter a burning building or equipment area.
- Choose an appropriate and safe place to install the equipment. This place must meet these requirements:
  - Temperature: For the inverter and battery pack. See Specifications.
  - Relative humidity: 0–95% (No condensation).
  - NO flammable or explosive materials.
  - NOT accessible to children.
  - NO salt hazards.
  - Sheltered from direct sunlight or severe weather.
  - NOT subject to strong vibration or electromagnetic fields.
  - Well ventilated
  - NOT a living area.
- A distance of at least 30 mm must be maintained between the cable and a heat generating device or the periphery of a heat source area to prevent deterioration and/or breakage of the cable insulation caused by high temperature.
- DO NOT install the equipment that is infiltrated by moisture.
- DO NOT install the equipment with damaged enclosure and exposed to moisture.

⚠ CAUTION

- Only qualified personnel are permitted to transport the equipment.
- Loading, unloading, installation, removal, and transportation of inverters and battery packs must be accomplished by two or more persons to prevent personal injury caused by accidental falling equipment.
- If lifting tools are used to lift the equipment, make sure that no one passes or stays under the equipment.

NOTICE

- Before installation, do a regular check and maintenance on the tools.

2.5 Installation Safety

⚠ DANGER

- To avoid personal injury caused by the high voltage inside the equipment:
  - Use special insulated tools for wiring.
  - Read the warning signs on the equipment and follow their instructions.
  - Follow the safety instructions in this manual and other documents provided.
- Only trained professionals are permitted to install the equipment.
- Only qualified personnel are permitted to disassemble the safety features and to service the equipment.
- Only the personnel who have the special operation qualification required by national or local authorities are permitted to work in special scenarios such as electrical operation, work at heights, and operation of special equipment.
- Only KSTAR-approved professional personnel are permitted to replace the equipment or spare parts (including software).
- DO NOT power up the equipment before the installation is completed and confirmed by trained professionals.
- Avoid direct contact with the power supply equipment, as well as indirect contact through wet objects. Prevent other conductors from coming into contact with the power supply equipment. Measure the voltage at the point of contact before you touch any conductor surface or terminal, so as to avoid electric shock.
- Use appropriate measuring tools to make sure that the electrical parameters of the equipment meet the requirements. To prevent electric arcs or shocks, make sure that the connection and use of the equipment comply with the specifications.

⚠ WARNING

- DO NOT install equipment in severe weather such as lightning, rain, snow, or winds of force 6 or higher.
- If there is a fire, evacuate the building or equipment area and ring the fire alarm, or call the emergency services. DO NOT enter a burning building or equipment area.
- It is recommended that you install the inverter vertically, not inverted, horizontal, tilted forward or backward, excessively tilted, or tilted sideways.
- When tightening screws or bolts on products or terminals with tools, tighten to the specified torque to prevent damage to the equipment. The manufacturer shall not be responsible for such damage.
- DO NOT touch the equipment surface when the equipment is in operation. The housing gets hot, and touching it can result in burns.
- The cables used in the PV system must be of the right size, firmly connected, and well insulated.
- Before connecting the DC connector to the inverter, check the positive and negative terminals of the PV string and make sure that no error occurs before inserting the DC connector into the DC terminal.
- During the installation of the inverter, make sure that neither the positive nor the negative terminal of the PV string is shorted to ground, to prevent damage caused by AC/DC short circuit of the inverter.

⚠ CAUTION

- To prevent uninvolved persons from approaching the equipment, place highly visible warning signs or set up safety caution tape around the equipment.
- DO NOT remove the equipment protection.
- DO NOT ignore the danger, warning, caution, and notice text in the manuals and on the equipment.

NOTICE

- The wiring process must follow the regulations of the local grid and the safety instructions for the PV string.

2.6 Operation Safety

DANGER

- Follow the safety instructions in this manual to prevent personal injury and/or property damage.
- The person who operates the equipment must have necessary knowledge of the equipment, including the equipment components and how they work.
- The person who operates the equipment must have necessary knowledge of this manual.
- Only qualified personnel are permitted to disassemble the safety features and to service the equipment.
- Keep persons other than those operating the equipment away from the equipment.
- DO NOT operate the equipment in an environment where explosions can occur, or where the relative humidity is high.
- When the equipment is in operation,
  - DO NOT open the inverter and the battery packs.
  - DO NOT wipe the equipment with a wet cloth.
  - DO NOT touch the housing of the equipment.
  - DO NOT plug or unplug connectors on the inverter.
  - To avoid electric shock, DO NOT touch any terminals of the inverter.
  - To avoid electric shock, DO NOT disassemble any parts of the inverter.
  - To avoid burns, DO NOT touch any hot parts of the inverter, such as radiator.
  - To avoid electric shock, DO NOT connect or disconr a PV string or a component of a PV string.
- To avoid fatal electric shock, DO NOT touch the DC conductors or energized electrical parts of the inverter. When PV arrays are exposed to sunlight, they can generate life-threatening DC voltage. This voltage can be present in DC conductors and in the energized electrical parts of the inverter.
- To avoid electric shocks and burns caused by possible arcs, DO NOT disconnect the DC connector from the inverter under load.
- Before operating the inverter or the battery packs, disconnect the inverter from all voltage sources as described in this manual.
- DO NOT touch uninsulated cable ends.

	• To prevent chemical burns caused by leakage of electrolyte or toxic gases from a damaged battery, operate the battery packs in accordance with the standard procedure. When the battery packs are operated in a standard manner, no leakage of electrolyte or generation of toxic gases can occur. However, if the battery packs are damaged or malfunction, it can leak electrolyte or generate toxic gases.
⚠ WARNING	• DO NOT operate equipment in severe weather such as lightning, rain, snow, or winds of force 6 or higher. • DO NOT touch the equipment with wet hands. • DO NOT put any heavy objects on the top of the equipment. • DO NOT damage the equipment with sharp objects.
⚠ WARNING	External protective earthing terminal shall meet at least one of the following requirements: • When the cross-sectional area of the earthing cable is ⩾10mm²(copper) or ⩾16mm² (aluminum), it is recommended that both the external protective earthing terminal and the AC side earthing terminal are grounded. • When the cross-sectional area of the earthing cable is <10mm² (copper) or <16mm² (aluminum), **ensure that** both the external protective earthing terminal and the AC side earthing terminal are grounded. If alternative earthing methods comply with local standards and relevant safety regulations, the connection may be performed according to such standards and regulations. Our company shall not be held liable for any consequences that may arise therefrom.

⚠ CAUTION

- To prevent uninvolved persons from approaching the equipment, place highly visible warning signs or set up safety caution tape around the equipment.
- DO NOT move the inverter when it is connected to the battery packs.
- Secure the inverter to prevent tilting.
- During the operation of the equipment, if any risks are found that may lead to personal injury or equipment damage, stop the operation immediately, report to the person in charge, and take effective steps.
- During the operation of the inverter, make sure that neither the positive nor the negative terminal of the PV string is shorted to ground, to prevent damage caused by AC/DC short circuit of the inverter.

NOTICE

- In the event of exposure to the electrolyte, immediately flush the affected area with water and seek immediate medical attention.

2.7 Maintenance Safety

DANGER

- Follow the safety instructions in this manual to prevent personal injury and/or property damage.
- Only trained professionals are permitted to maintain the equipment.
- Only qualified personnel are permitted to disassemble the safety features and to service the equipment.
- Keep persons other than those operating the equipment away from the equipment.
- Wear personal protective equipment (PPE), including protective gloves and protective shoes.
- DO NOT begin maintenance work on the equipment until it is turned off and fully discharged.
- Before maintenance, disconnect the AC circuit breaker from the grid and check the inverter status. If all the inverter indicator lights are off, do nothing and disconnect the DC switch at night. If the inverter indicator is on, disconnect the DC switch directly.
- After the inverter is powered down for five minutes, use testing equipment to check the voltage of the bus capacitor and of the capacitors in the battery terminal input and make sure that there is no voltage.
- To avoid burns, DO NOT operate the equipment immediately after shutdown. After the equipment cools down, wear protective gloves to operate the equipment.

WARNING

- DO NOT maintain equipment in severe weather such as lightning, rain, snow, or winds of force 6 or higher.
- To avoid electric shock, DO NOT touch the power grid or the contacts and terminals inside the equipment that are connected to the grid.
- Use a standard voltmeter to check the grid. DO NOT touch the grid before you make sure that there is not voltage.
- To prevent or to minimize potential damage caused by moisture, DO NOT repair or maintain the equipment in a wet environment.

CAUTION

- To prevent uninvolved persons from approaching the equipment, place highly visible warning signs or set up safety caution tape around the equipment.

NOTICE	• If the paint on the inverter housing falls off or rust appears, repair it in a timely manner. Otherwise, the use of the inverter may be affected. • To avoid damaging the inverter, DO NOT use cleaning agents to clean the inverter. The manufacturer shall not be responsible for such damages. • DO NOT open the inverter (excluding the cable box) and replace the components inside without the permission of the manufacturer.

2.8 Disposal Safety

⚠ DANGER	• Only trained professionals are permitted to discard the equipment.
⚠ **WARNING**	• Before disposal, make sure that all warning signs and nameplates are clearly visible and have not been removed or obscured. • To prevent property damage and personal injury, dispose of equipment in accordance with local regulations and standards.

3 Product Introduction

3.1 Features

The E3.68KS-D22/E5KS-D22/E6KS-D22 is a residential photovoltaic storage system that is composed of a power control module and an extendable battery pack. It stores and releases electrical energy according to the inverter management system requirements. KSTAR New Energy provides a photovoltaic storage-monitoring platform to monitor and control electricity generation and storage of the E3.68KS-D22/E5KS-D22/E6KS-D22. Power generation, consumption, and storage can be grasped at any time and any place, and the information can be monitored and controlled remotely. The E3.68KS-D22/E5KS-D22/E6KS-D22 comes with an integrated energy management system (EMS). This system enables the inverter to run off-grid or on-grid and manages energy flow intelligently so that the system can operate economically.

3.2 Delivery Scope

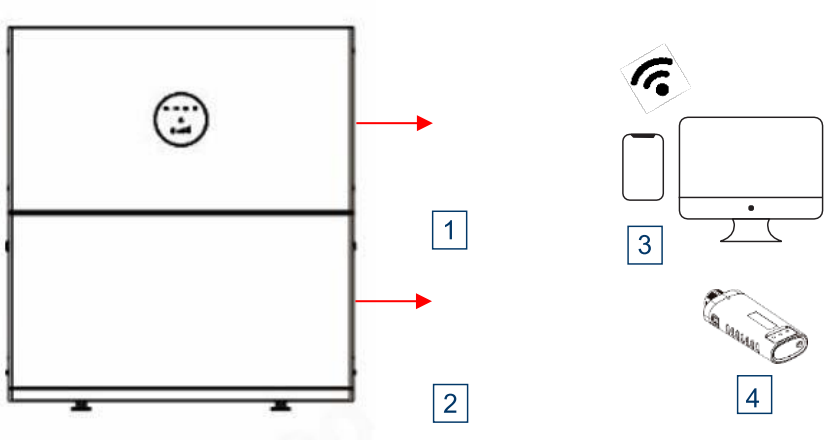

Figure 3-1 E3.68KS-D22/E5KS-D22/E6KS-D22 Delivery Scope

1. Hybrid inverter (with integrated Energy Management System).
2. Battery packs, extendable.
3. SOLARMAN, for remote monitoring, available in a web-based portal and an APP. For more information, see Stick Logger Quick Guide.
4. Stick logger, to be connected to the inverter. For more information, see Stick Logger Quick Guide.

3.3 Model

3.3.1 Inverter Model

The hybrid inverter model is E3.68KS-D22/E5KS-D22/E6KS-D22.

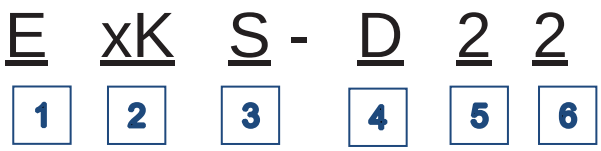

1 “E” means “energy storage system”.

2 “xK” indicates the rated output of the system. “3.68K” means 3.68 kW, “5K” means 5 kW, and “6K” means 6 kW.

3 “S” means “single-phase inverter”.

4 “D“ means “Per MPPT current ≥20A”

5 “2“ means “2 MPPT”

6 “2” means “Generation 2”

3.3.2 Battery Pack Model



1 “BP” means the label “BATTERY PACK”.

2 “48” means the voltage of the battery pack 48V.

3 “100” means the battery capacity is 100Ah.

4 “P” means the battery packs are connected in parallel for multiple battery packs.

5 “F” means with a heating film.

6 “1” means with EVE 3U cells, “2” means with CATL 3U cells. , “3” means with CATL 4.3U cells.

7 “G2” means the 2nd generation residential battery pack of KSTAR.

3.4 Inverter Appearance

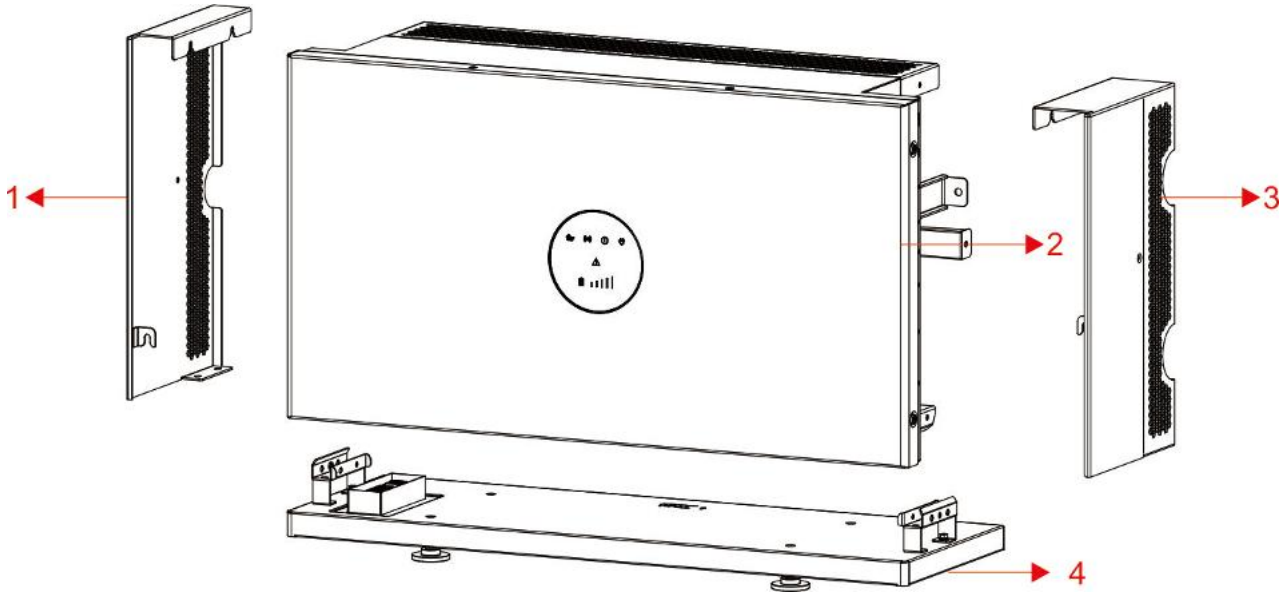

Item	Describe	Item	Describe
1	Left decorative panel	2	LED display panel
3	Right decorative panel	4	Floor stand support

Figure 3-2 the main components exploded diagram in the inverter packaging box

3.5 External ports on the inverter

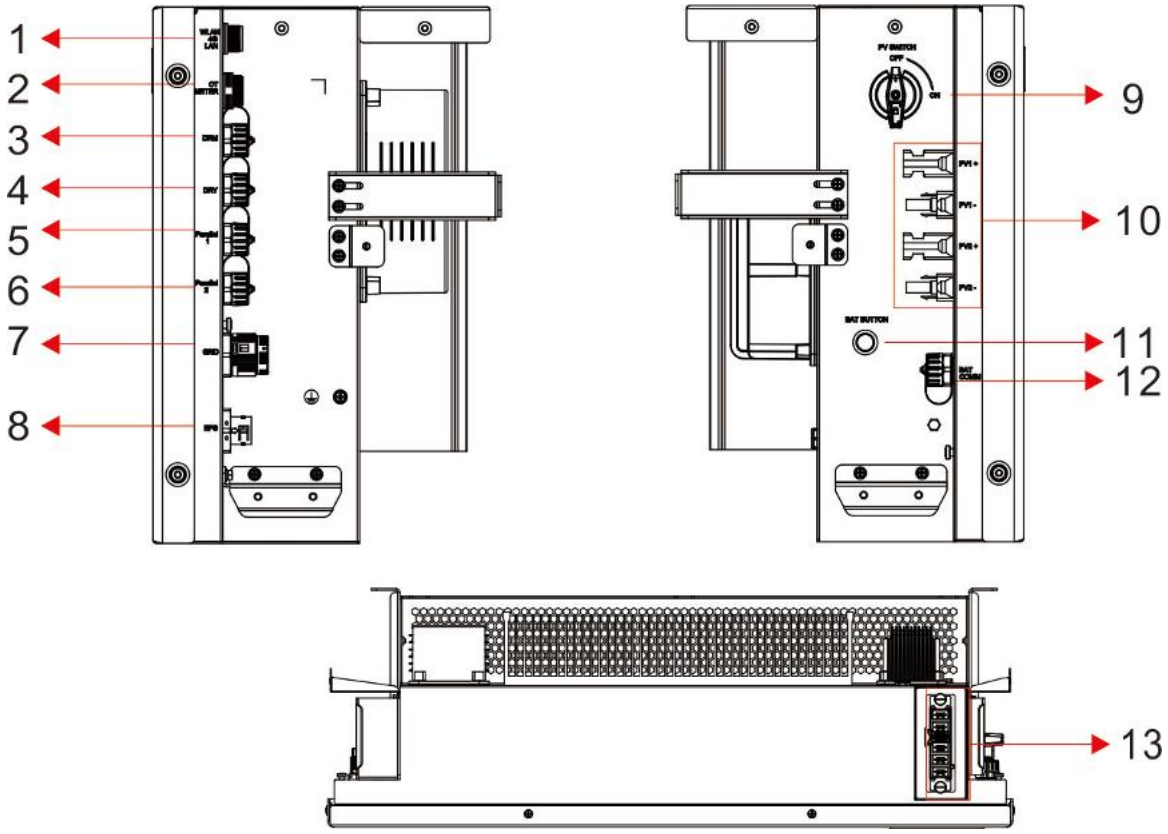

Figure 3-3 External Interface

Item	Describe	Item	Describe
1	WLAN/4G/LAN （DVC A）	2	DRY contact （DVC A）
3	DRM（DVC A）	4	CT/METER（DVC A）
5	Parallel1（DVC A）	6	Parallel2（DVC A）
7	GRID（DVC C）	8	EPS（DVC C）
9	PV SWITCH（DVC C）	10	PV1/PV2（DVC C）
11	BAT CAN（DVC A）	12	BAT BUTTON（DVC A）
13	BAT connect （DVC C）		

NOTE

Decisive voltage classification (DVC) identifies the minimum necessary level of protection for the circuit. For more information on the DVC of each port, see Appendix: Definition of DVC.

3.6 Battery Pack Appearance

BP48100P1-G2

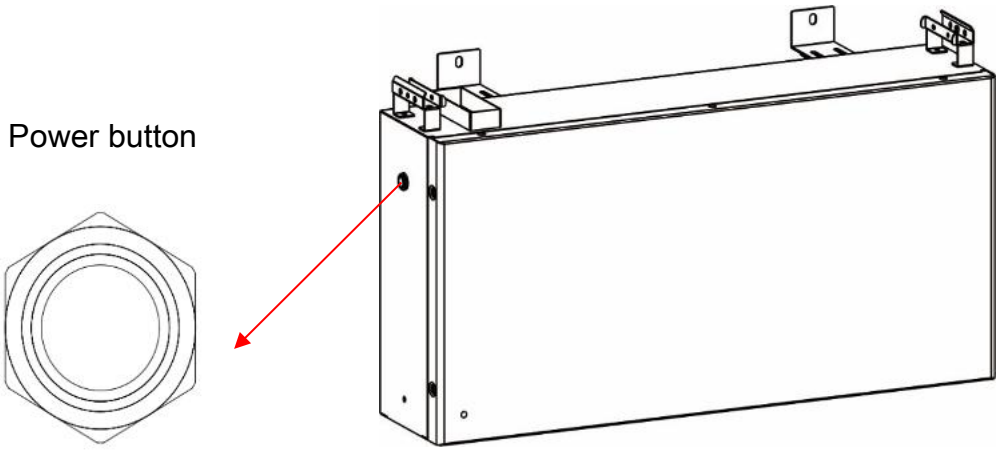

3.7 Battery port information

3.7.1 Battery interface female

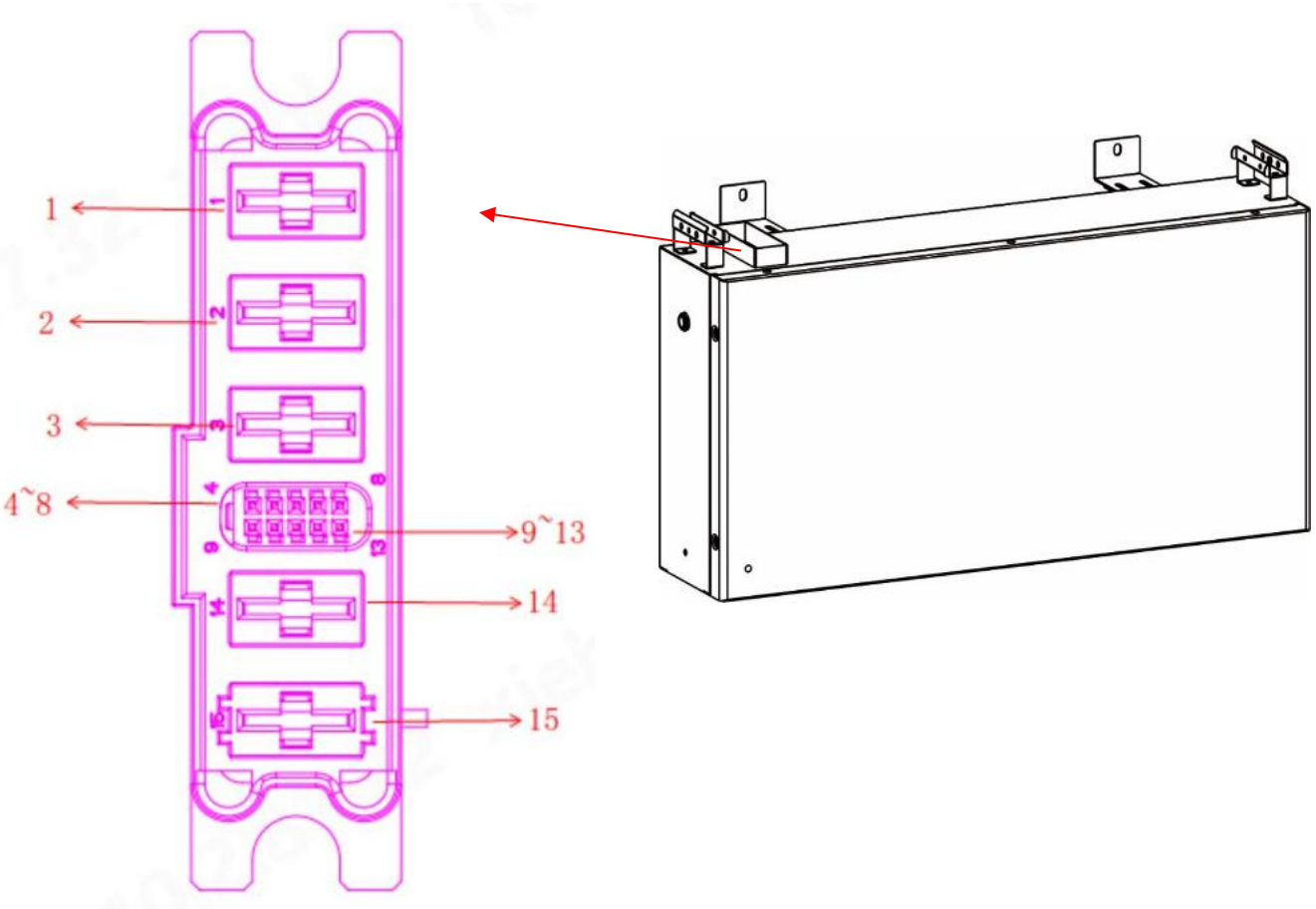

Code	Describe
1	Battery-
2	Battery-
3	Chassis ground
4	CANH
5	Activate_5V+
6	Inverter_key+
7	Inveter_Contact+
8	UP_IN+
9	CANL
10	Activate_5V-
11	Inverter_key-
12	Inveter_Contact-
13	UP_IN-
14	Battery+
15	Battery+

3.7.2 Battery interface male

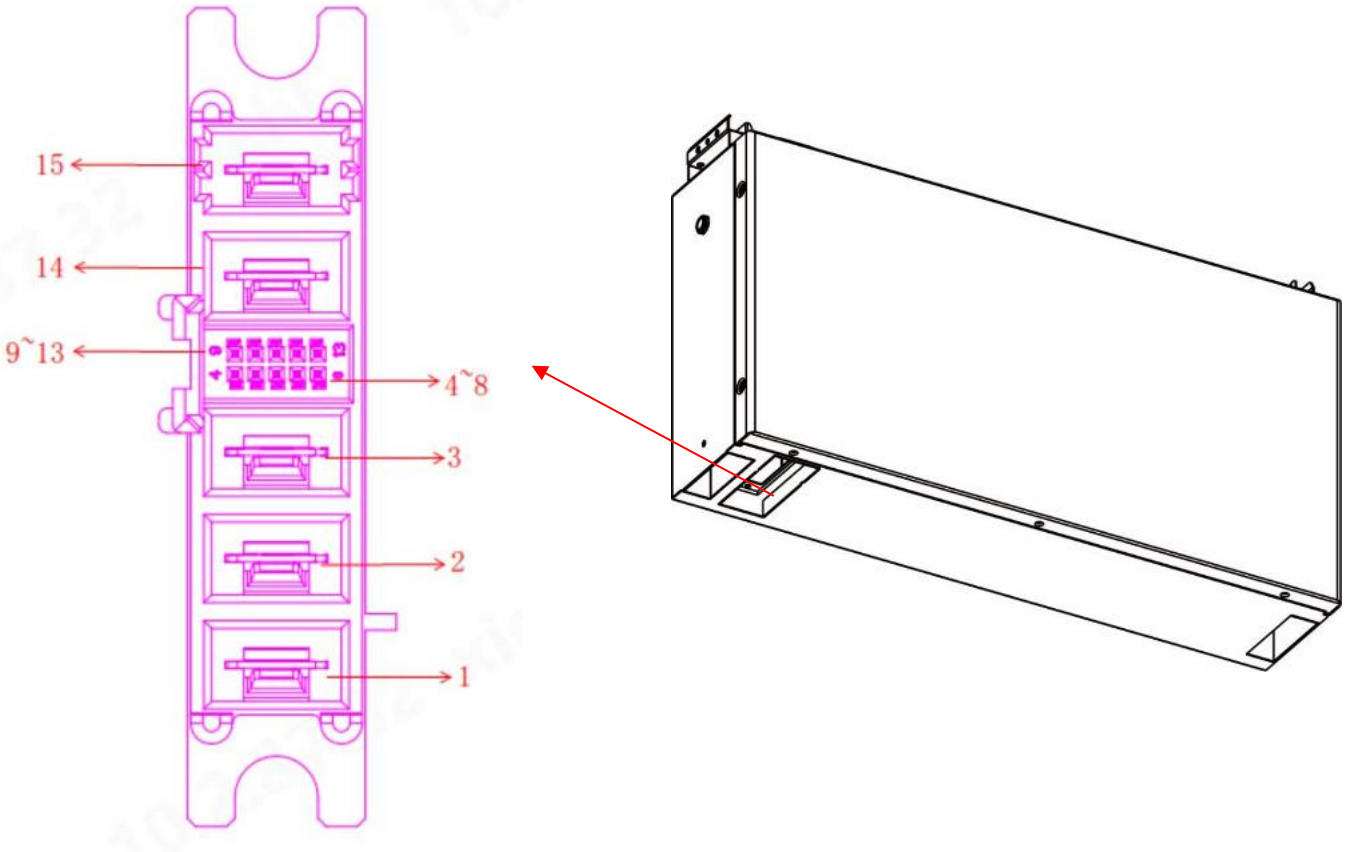

Figure 3-4 Appearance of BP48100P-G2

Code	Describe
1	Battery-
2	Battery-
3	Chassic ground
4	CANH
5	Activate_5V+
6	NC
7	NC
8	DO_OP+
9	CANL
10	Activate_5V-
11	NC
12	NC
13	DO_OP-
14	Battery+
15	Battery+

3.8 Energy Management System (EMS)

The inverter incorporates an electric energy management system (EMS) for low-voltage power distribution systems. It is an extended development of the energy management system that complies with the standard specifications of the power distribution system. It is highly automated, easy-to-use, high-performance, and highly reliable. You can turn on Bluetooth or WIFI switch on your mobile phone and then open the SOLARMAN Smart APP to deploy loads, optimize operation, and effectively save power.

3.9 Parallel System

With the E3.68KS-D22/E5KS-D22/E6KS-D22, you can connect up to four inverters of the same model in parallel to build a parallel system. In a parallel system, loads must be connected in parallel on both the on-grid and EPS sides. Compared with a system installed with one inverter, a parallel system expands the system capacity. For example, the rated power of the on-grid side of a system installed with one E6KS-D22 is 6 kW, but the rated power of the on-grid side of a parallel system with three E6KS-D22s is 18 kW (= 3 × 6 kW). The rated power of the EPS side is calculated in the same way.

To build a parallel system, you must set one inverter as the primary inverter, and others as subordinate inverters. For more information, see Installing a Parallel System.

NOTE

- In a parallel system, the total grid power and total load power of each inverter can be viewed through the SOLARMAN Smart APP on a mobile device.
- In a parallel system, for some settings, such as working mode, zero export, and time setting of the PEAK SHIFT mode, you only need to set them in the primary inverter. These settings in the subordinate inverters are to be forced to synchronize with the primary inverter, but the setting values shown on the SOLARMAN Smart APP of the subordinate inverters do not automatically change in synchronization.
- In a parallel system, all settings must be the same for all inverters except for the addresses of the inverters.

3.10 Scenarios

The E3.68KS-D22/E5KS-D22/E6KS-D22 can be used in both a DC-coupling system and an AC- coupling system.

3.10.1 DC-coupling System

In a DC-coupling system, the DC electricity generated by the PV panels is directly sent to and stored in the batteries through the inverter. A DC-coupling system is ideal for a new on- and off-grid solar+storage system installation.

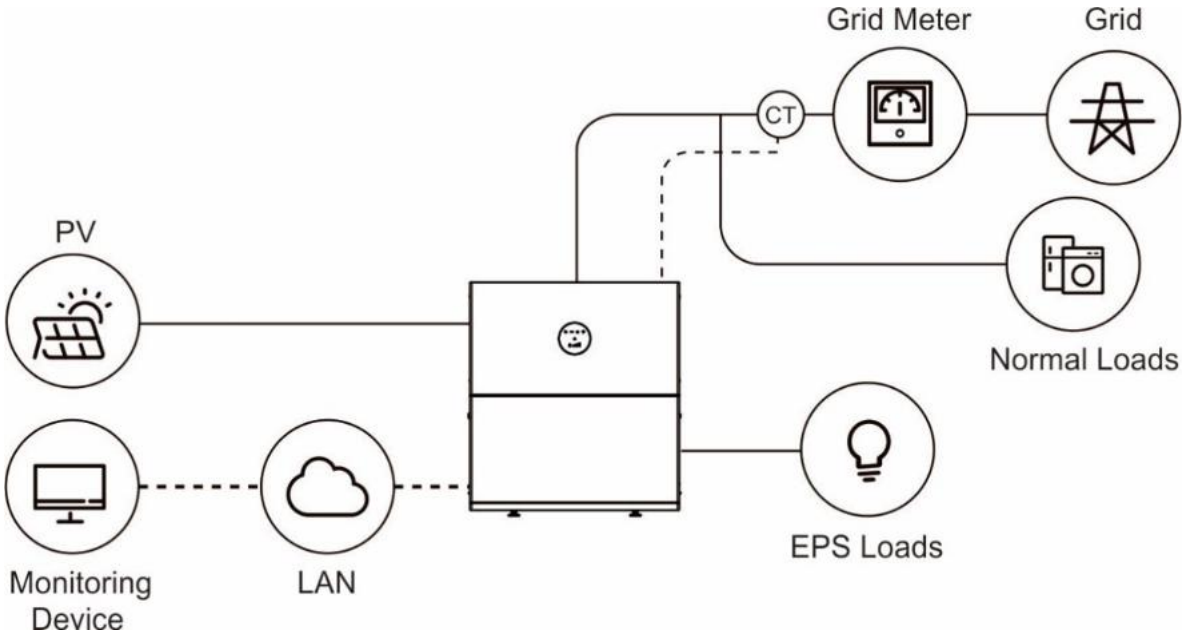

Figure 3-5 DC-coupling System

Here is the single line diagram of a DC-coupling system.

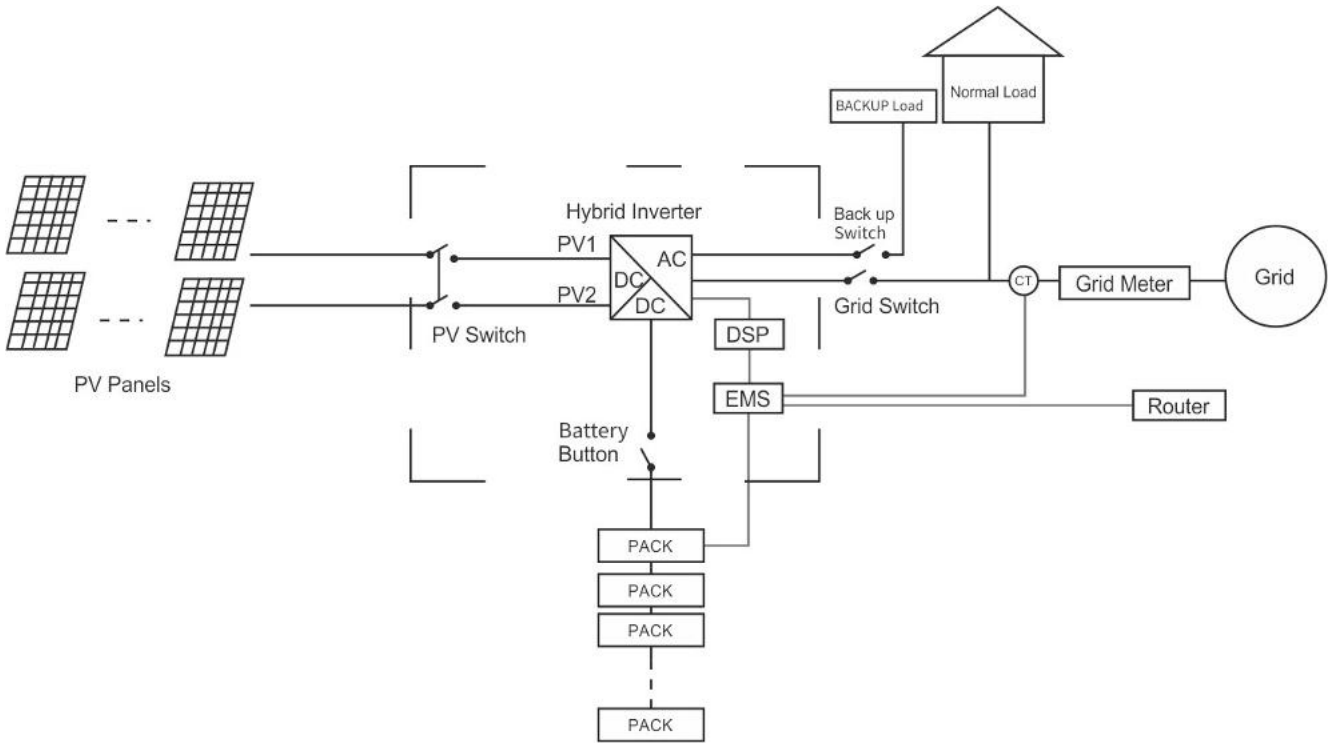

Figure 3-6 Single Line Diagram, DC-coupling System

3.10.2 AC-coupling System

In an AC-coupling system, DC electricity flows from PV panels to the inverter, the AC electricity from the inverter flows to the household loads or other inverters to transform the AC electricity back to DC electricity, and then store it in the batteries. An AC-coupling system is ideal for retrofit.

The E3.68KS-D22/E5KS-D22/E6KS-D22 supports two AC-coupling system schemas.

If you already have a PV inverter and now want to add an energy storage system to the inverter, but no PV panel is available for connection, you can use AC- coupling system Schema 1.

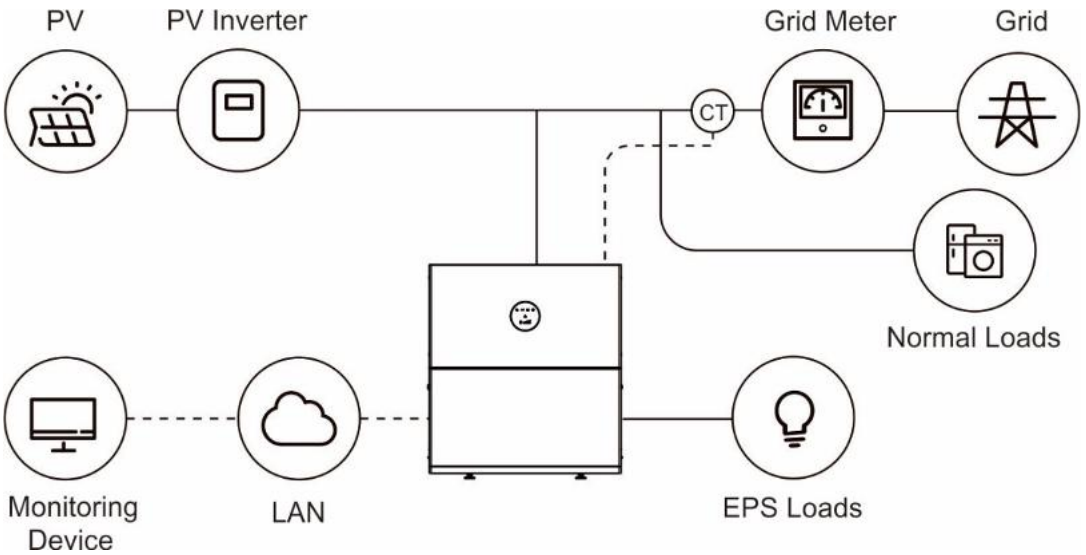

Figure 3-7 Ac-coupling System, Schema 1

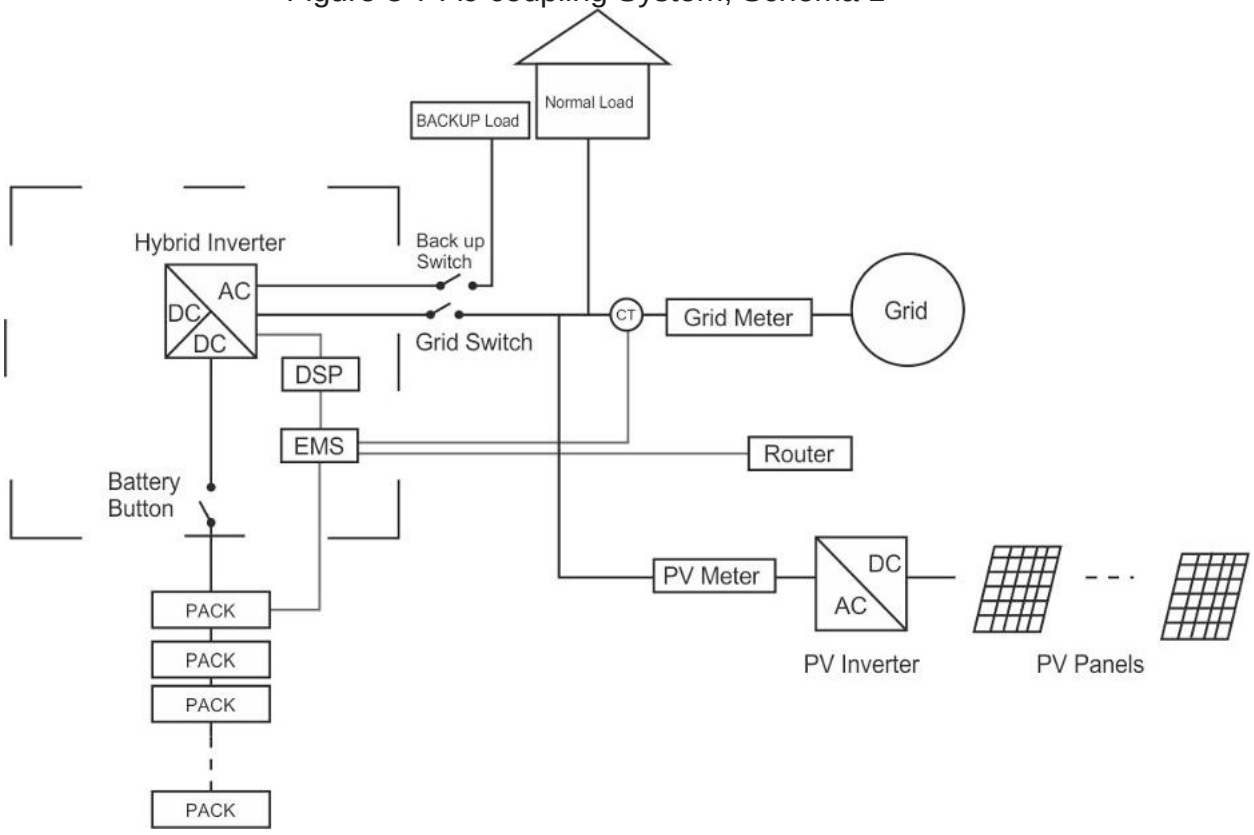

Figure 3-8 Single Line Diagram, AC-coupling System Schema 1

If you already have a PV inverter, now want to add an energy storage system to the inverter, and a PV panel is available for connection, you can use Schema 2 of AC-coupling system.

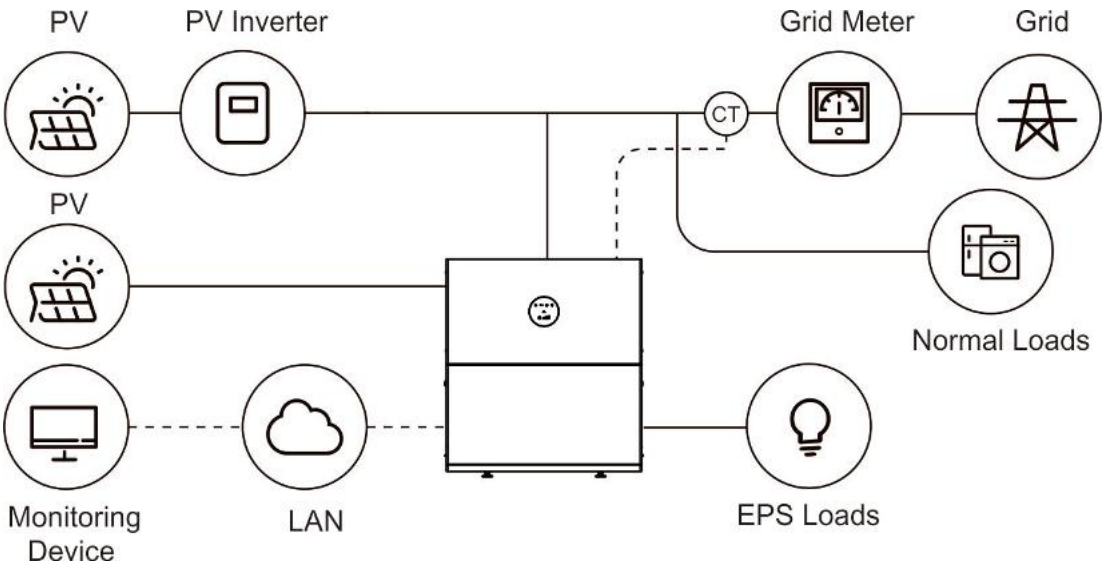

Figure 3-9 AC-coupling System, Schema 2

Here is the single line diagram of an AC-coupling system Schema 2.

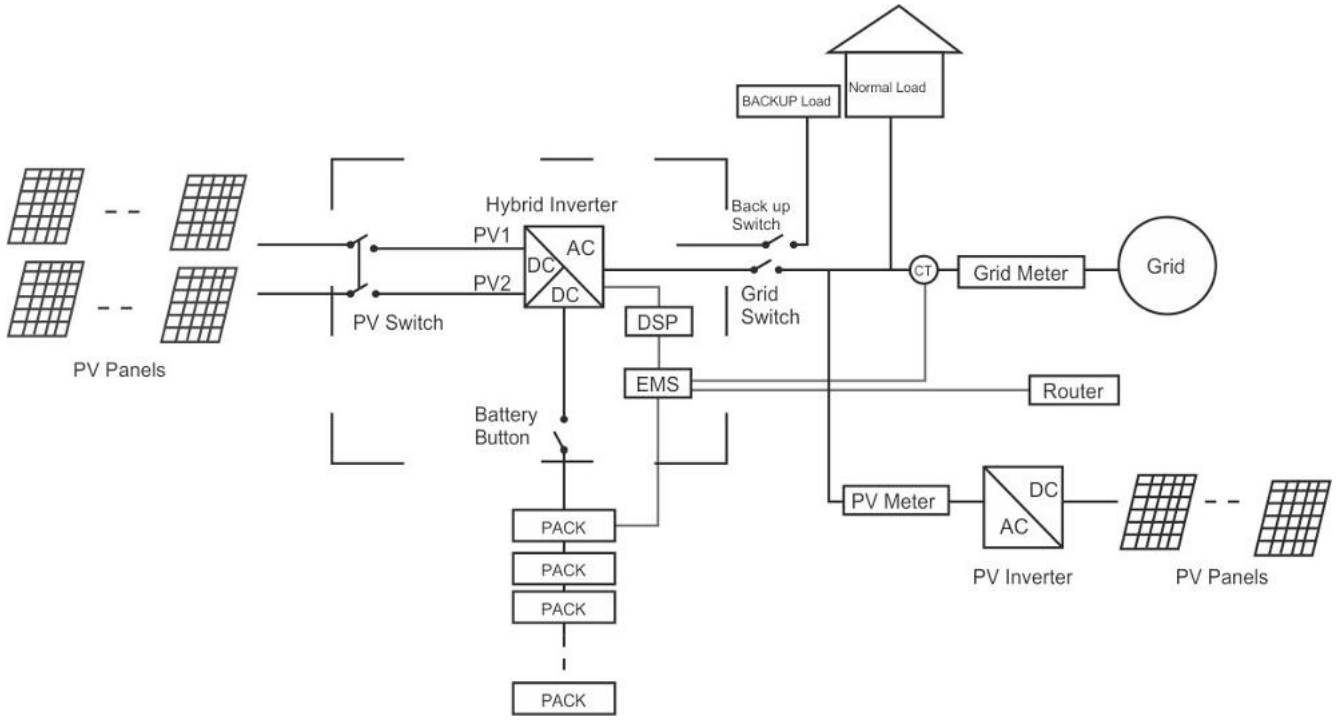

Figure 3-10 Single Line Diagram, AC-coupling System Schema 2

3.11 Wiring Diagram

N O T I C E

Make sure that the grounding resistance is less than 10 Ω.

In Australia, New Zealand, and South Africa, direct connection of the N cable and the PE cable in the distribution box is necessary, as shown in Figure 3-11

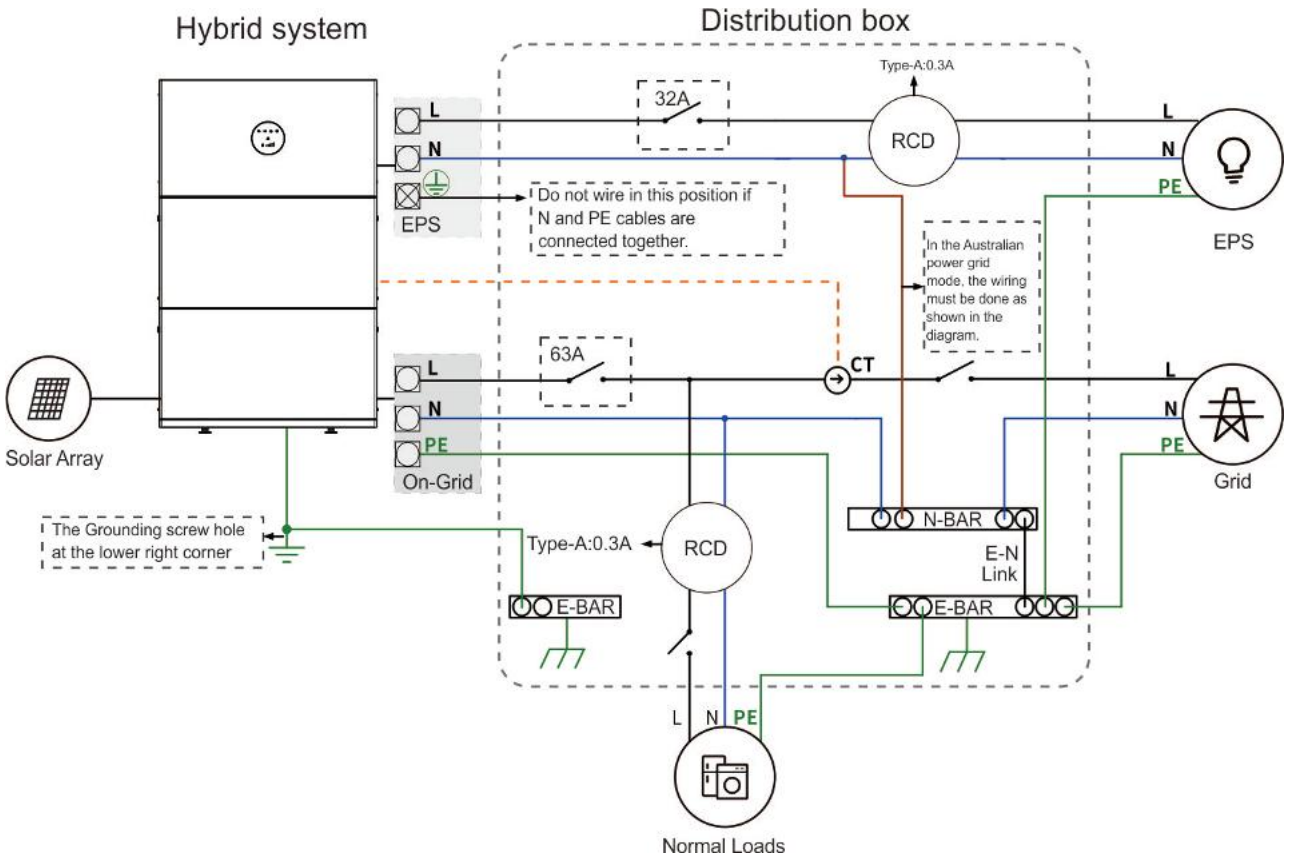

Figure 3-11 Wiring for Australia, New Zealand, and South Africa

Outside Australia, New Zealand, and South Africa, the N cable and the PE cable in the distribution box must be wired separately, as shown in Figure 3-12.

NOTE

Make sure that the grounding of the EPS load is correct and tightened. Otherwise, during a grid failure, the EPS may not function normally.

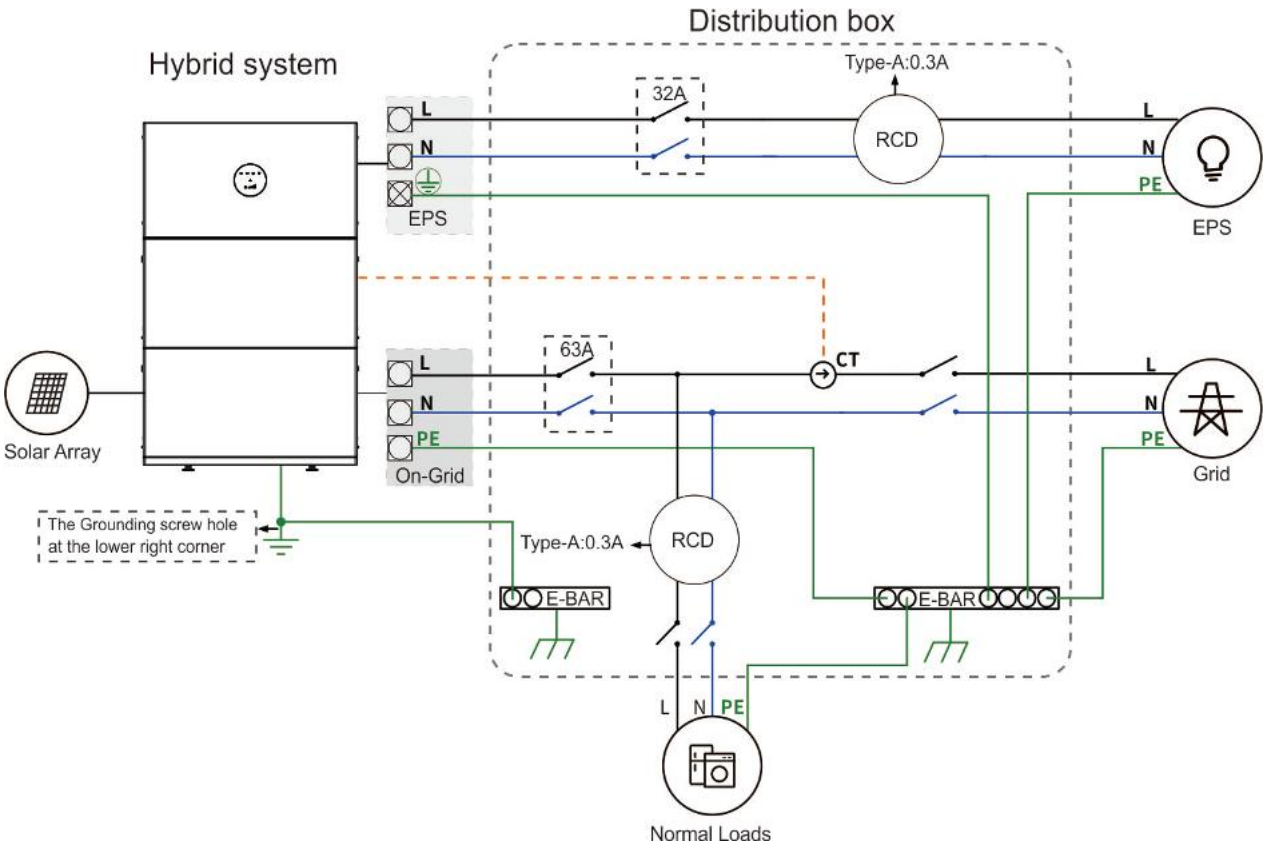

Figure 3-12 Wiring Outside Australia, New Zealand, and South Africa

The battery power and signal connectors are in blind-inserted mode, so the communication was automatically connected after the battery packs and the inverter were assemble.

3.12 System States

3.12.1 Inverter States

The inverter can be in six states shown in Table 3-2.

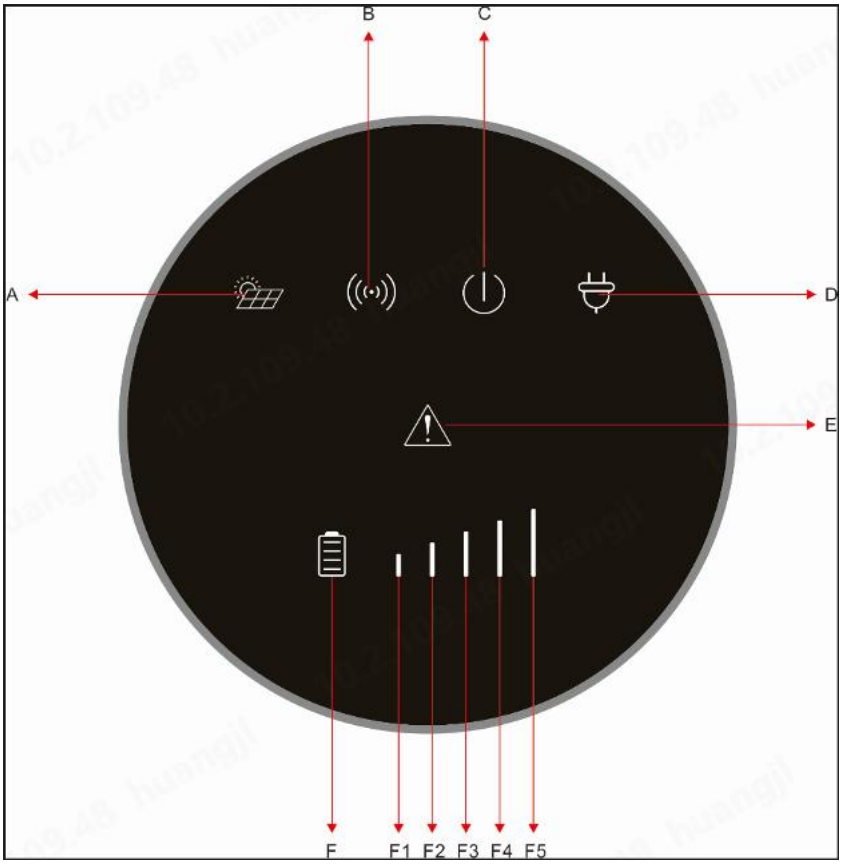

Table 3-2 Inverter States

Icons	Implication	Color	Status	Describe
A	PV Indicator	Green	On	PV operating normally
			Flashing	PV connected but not operating
			Off	PV not connected
B	Communication Indicator	Green	On	Monitoring backend connected and communication normal
			Off	Monitoring module not connected or communication abnormal
C	Grid Indicator	Green	On	System in On-grid operation mode
			Flashing	System in bypass mode
			Off	System in initialization, standby, off-grid, fault, commissioning, or upgrade mode
D	Off-Grid Indicator	Green	On	System in off-grid PV charging mode

			Off	PV off-grid charging not in progress
E	Fault Indicator	Red	On	System fault
			Off	
F	Battery Indicator	Green	On	Battery operating normally
			Flashing	Battery abnormal (alarm or BMS communication abnormal)
			Off	Battery shutdown or battery disconnected
F	Battery SOC Indicator (Flashing during charging)	Green	F5：5/5	≥80%
			F4：4/5	≥60%
			F3：3/5	≥40%
			F2：2/5	≥20%
			F1：1/5	≥5%
			0	<5%

NOTE

For more information about the error codes, see Error Codes of the System and Alarm Codes of the System.

3.12.2 Battery Pack States

A battery pack can be in five states: OFF, NORMAL, ALARM, FAULT, and PROTECTION. For more information, see Indicator Lights and States.

3.13 Working Modes

The E3.68KS-D22/E5KS-D22/E6KS-D22 supports three working modes: SELF CONSUME, BAT PRIORITY, and PEAK SHIFT. You can choose a working mode through the integrated EMS. For more information, see the WORK MODE subsection under Scene setting.

3.13.1 SELF CONSUME

In SELF CONSUME mode, the electricity generated by the PV panels is consumed in this order:

Step 1. Supplies electricity for household use.

Step 2. Stores the excess electricity in batteries.

Step 3. Pushes the excess electricity onto the local power grid.

When the sun goes down, the household power supply is automatically switched to the batteries. If the power supply from the batteries is not sufficient, power is

sourced from the local power grid.

3.13.2 PRIORITY

In **BAT PRIORITY** mode, the batteries are only used as EPS. When the grid fails, the household load is powered by the batteries. When the grid is working, the household load is powered by the grid, not by the batteries. The PV panels or the local power grid send electricity to the batteries, where it is stored until needed.

3.13.3 PEAK SHIFT

In PEAK SHIFT mode, you can determine the charging and discharging time of the battery yourself， and if you enabling the peak shift power control, you can set the peak power and valley power of the load power.

4 Installation

With the E3.68KS-D22/E5KS-D22/E6KS-D22, you can install a PV energy storage system using either of two schemas:

- Install one hybrid inverter and one, two, three, or four battery packs.
- Install a parallel system with multiple hybrid inverters of the same model, each with its own battery packs, connected in parallel. For more information, see Installing a Parallel System.

Follow the steps in Figure 4-1 to install a PV energy storage system with an E3.68KS-D22/E5KS-D22/E6KS-D22.

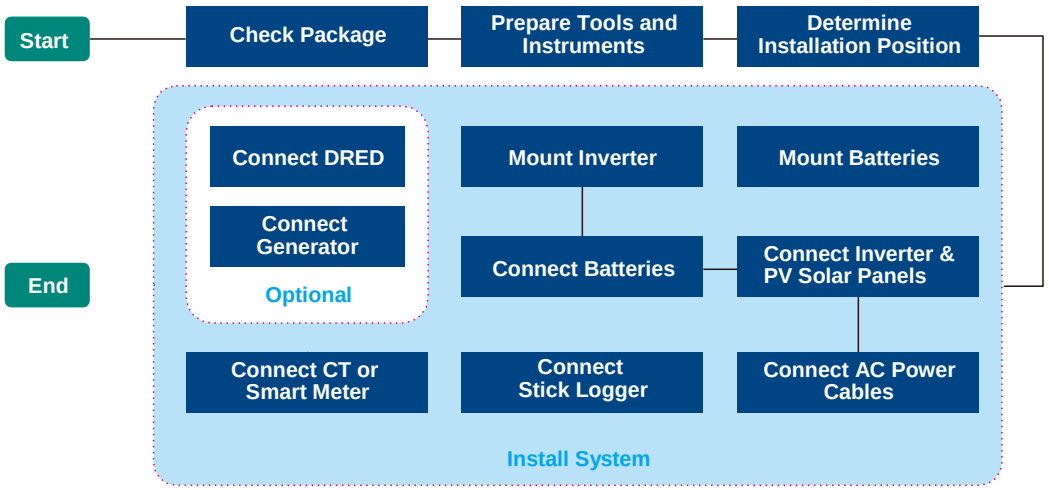

Figure 4-1 Installation Procedure

⚠ DANGER

Only trained professionals are permitted to install the system.
Two trained professionals are necessary to carry out installation.

4.1 Checking the Package

Open the package, make an inventory of its contents, and make sure that all hybrid inverter and battery pack components are present.

⚠ WARNING

Before opening the package, make sure that the box is not damaged.

4.1.1 Hybrid Inverter Components

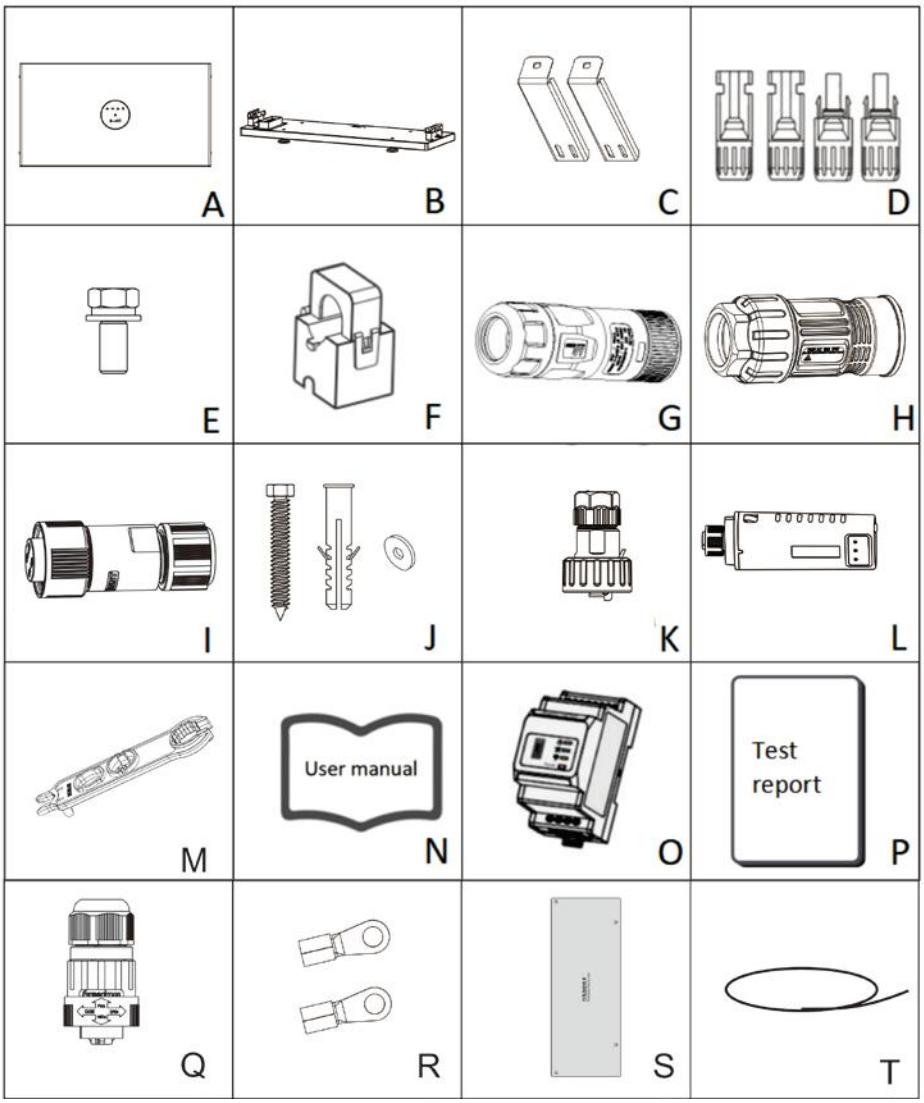

Item	Quantity	Description	Item	Quantity	Description
A	1	Inverter (packed and assembled with base)	B	1	Base (must be removed from inverter bottom immediately after unpacking)
C	2	Mounting bracket	D	2	PV terminals: 2x positive, 2x negative
E	4 sets	M4x12 Bolt	F	1	CT (optional)
G	1	AC EPS connector	H	1	AC grid connector
I	1	WIFI Connector	J	1 set	2 screws, 2 rubber sleeves, 2 gasket (base and wall bracket)
K	1	RJ45 Connector	L	1	WIFI+BLE Stick
M	1	PV connector tool	N	1	User manual, Warranty card, Certificate of quality card
O	1	YDS70-C16 Smart Power Meter (optional)	P	1	Test report
Q	1	CT Connector	R	2	OT terminals
S	1	Positional Punch card	T	1	RS485 Communication Cable (10 m)

4.1.2 Battery pack Components

A battery pack delivery includes the following.

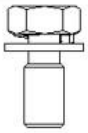	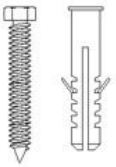	
M5*12:8pcs	ST6.3*50:2pcs D10*50:2pcs	M6 Gasket:2pcs
		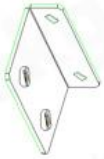
M4*10:2pcs	Mounting Kit-Wall:2pcs	Mounting Kit-Battery:2pcs

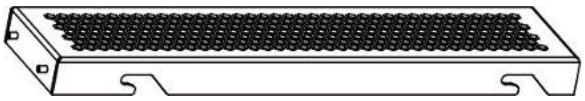

Mechanical cover*2

4.2 Preparing Tools and Instruments

 Protective Goggles	 Protective Gloves	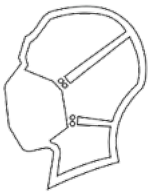 Protective Mask
 Protective Shoes	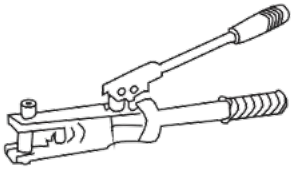 Wire Clamp	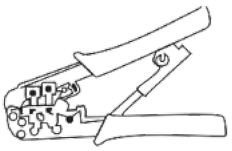 Cable Crimper
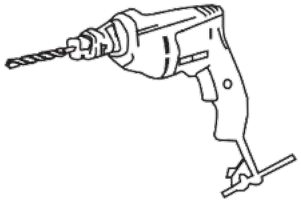 ϕ10mm Power Drill	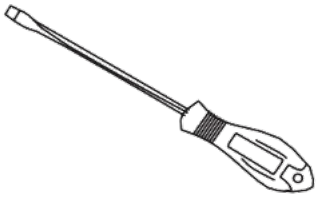 Flat-head Screwdriver	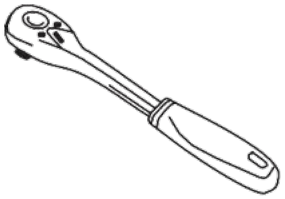 Torque Wrench
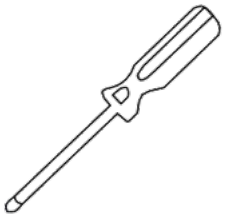 Cross Screwdriver	 Multi-meter	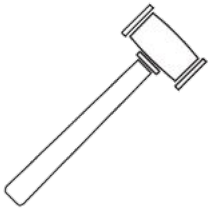 Rubber Mallet
 Leveling Instrument	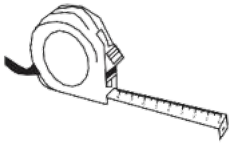 Tape Measure	 Marker Pen
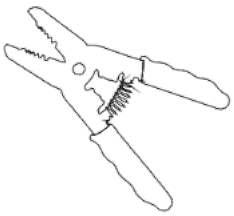 Wire Stripper	 ON GRID Wire (8 AWG or 8 mm^2)	 EPS Wire (10 AWG or 6 mm^2,)
 PV Wire (12 AWG or 4 mm^2, max. Voltage 1,000 V)		

4.3 Installation Position Requirements

The E3.68KS-D22/E5KS-D22/E6KS-D22 energy storage system can be installed indoors or outdoors, but the position for installation must meet these requirements:

- Sufficient space for personnel to install and maintain the equipment and to Observe the LED indicator light status on the hybrid inverter.
- Ambient temperature: For the inverter and battery pack. See Specifications.
- Relative humidity: 0–95% (No condensation).
- Level floor, but not sloped.
- Sheltered from direct sunlight or severe weather.
- Well ventilated
- NOT near flammable or explosive materials.
- NOT exposed to salt hazards.
- NOT subject to strong vibration or electromagnetic fields.
- NOT a habitable room, as defined in AS/NZS 3000
- NOT accessible to children.



The energy storage system needs to keep a certain safe distance(>1r the surrounding doors, windows, escape routes and other systems.

4.3.1 Restrictions

DO NOT install the system in these locations:

- Habitable rooms, as defined in AS/NZS 3000.
- A ceiling or wall with a cavity.
- On a roof.
- Entrance or exit.
- Underneath staircases or passageways.
- Areas where relative humidity and condensation exceed 95%.
- Places exposed to salty air.
- Earthquake zones, unless additional safety measures have been taken.
- Places at more than 4,000 meters above sea level.
- Places in direct sunlight or places where the ambient temperature varies a lot.
- Places with flammable materials and gases.
- Places where explosions may occur.
- Locations where the installation of panels is restricted by AS/NZS 3000.
- Within 600 mm of any heat source, for example, hot water unit, gas heater, air conditioning unit, or any other equipment.
- Within 600 mm of any outlet.
- Within 600 mm of any window or vent.
- Within 600 mm of the side of any other installation.
- Hazardous areas with insufficient distance from gas cylinders or gas relief valves as defined in AS/NZS 3000.

.

When the E3.68KS-D22/E5KS-D22/E6KS-D22 is installed indoors, make sure that the building structure, room furniture, and appliances do not interfere with the operation and maintenance of the system.

If the E3.68KS-D22/E5KS-D22/E6KS-D22 is installed in a corridor, aisle, lobby, or similar area that leads to an emergency exit, at least one meter of space must be allowed for safe egress.

To prevent fire, the wall or structural surface on which the E3.68KS-D22/E5KS-D22/E6KS-D22 is mounted must be made of non-combustible material. If the wall or structural surface is not made of non-combustible material, a layer of non-combustible material can be placed between the equipment and the surface.

4.3.2 Clearance Requirements

If the E3.68KS-D22/E5KS-D22/E6KS-D22 is mounted on a wall or on a surface that is 300 mm from a wall or structure that separates the equipment from habitable rooms, the distance between the equipment and other structures or objects must be increased. The minimum required clearance is as follows:

- 500 mm to the sides of the equipment.
- 500 mm above the equipment.
- 500 mm in front of the equipment.

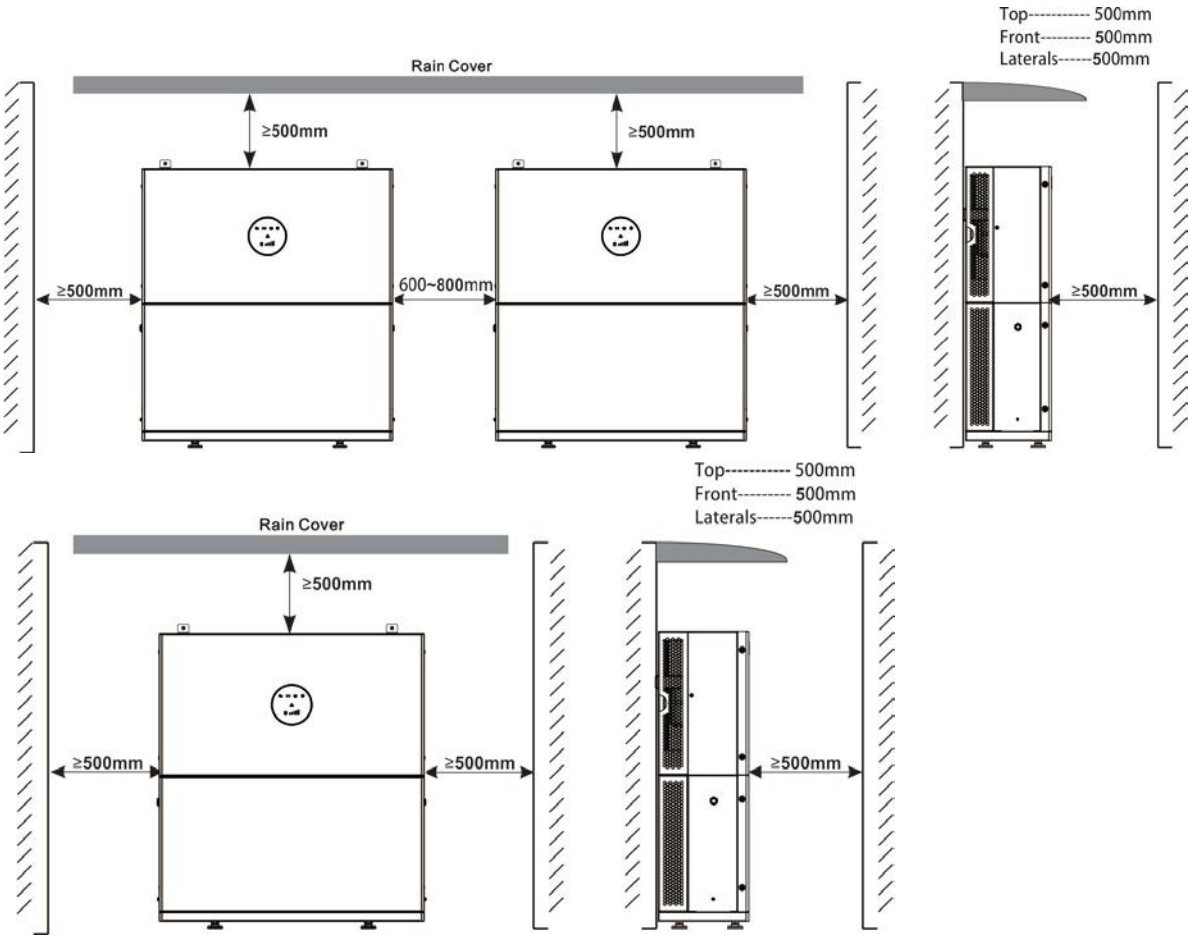

Figure 4-2 Peripheral Clearance Requirements for Installation

N O T I C E

- For outdoor installations, a shelter above the equipment is necessary.
- When installing the E3.68KS-D22/E5KS-D22/E6KS-D22, make sure that the distance between the highest point of the equipment and the ground or the mounting platform does not exceed 2.2 meters.

If the distance between the E3.68KS-D22/E5KS-D22/E6KS-D22 and the object above it, for example, a ceiling, is less than 500 mm, the surface of the object must be paved with non-combustible material in the form of a circle with a radius of 600 mm around the center of the equipment.

NOTE

The minimum distance between the E3.68KS-D22/E5KS-D22/E6KS-D22 and the object above it must be more than 200 mm.

4.4 Installing the System

Follow the steps in this section to install an E3.68KS-D22/E5KS-D22/E6KS-D22 energy storage system with one hybrid inverter.

4.4.1 Mounting the All in one system

NOTES

The inverter should be moved by two persons. One inverter weighs approximately 25 kg.

Wear protective goggles and a mask to prevent the dust created during drilling from entering the respiratory tractor

PROCEDURE

Step 1. Remove the inverter from the carton.

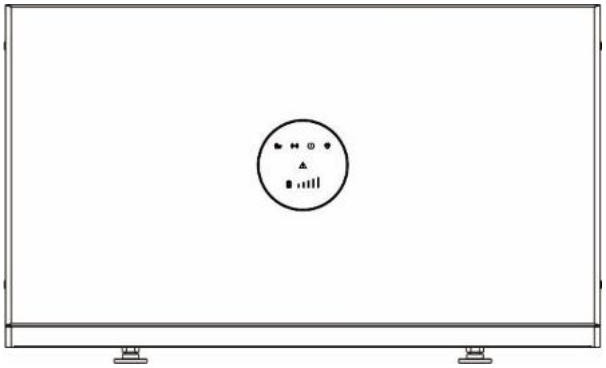

Step 2. Remove the screws in the middle of the decorative side panel.

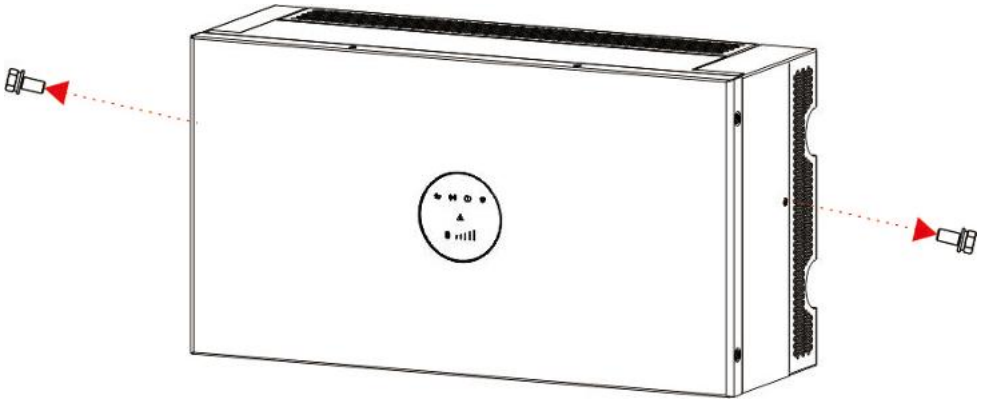

Step 3. First lift out the decorative side panels upwards, then remove the bottom fixing screws.

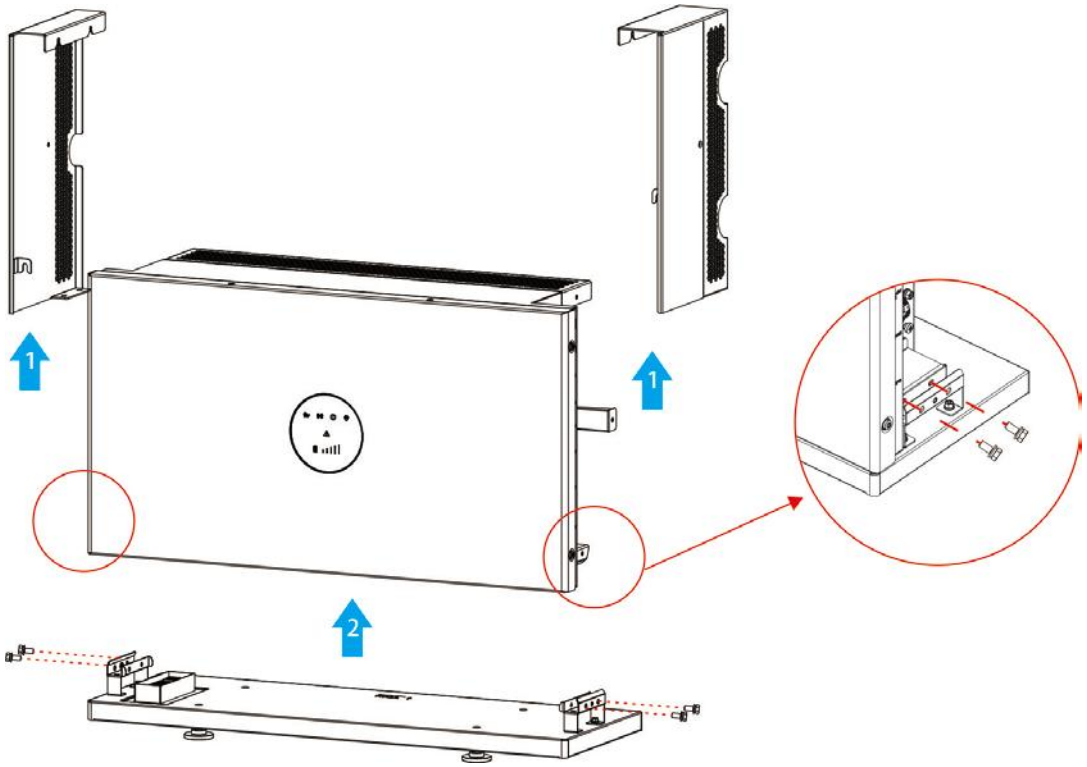

Step 4. Place the floor stand support horizontally on the ground.

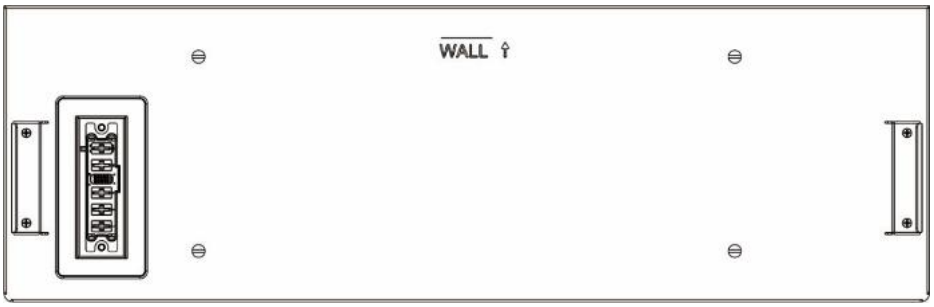

Step 5. Battery Pack Installation

5-1 Take the battery pack out of the carton and stand it horizontally on the ground， tear off the protective film at the battery interface on both sides of the battery pack, then place the battery pack vertically on the base.

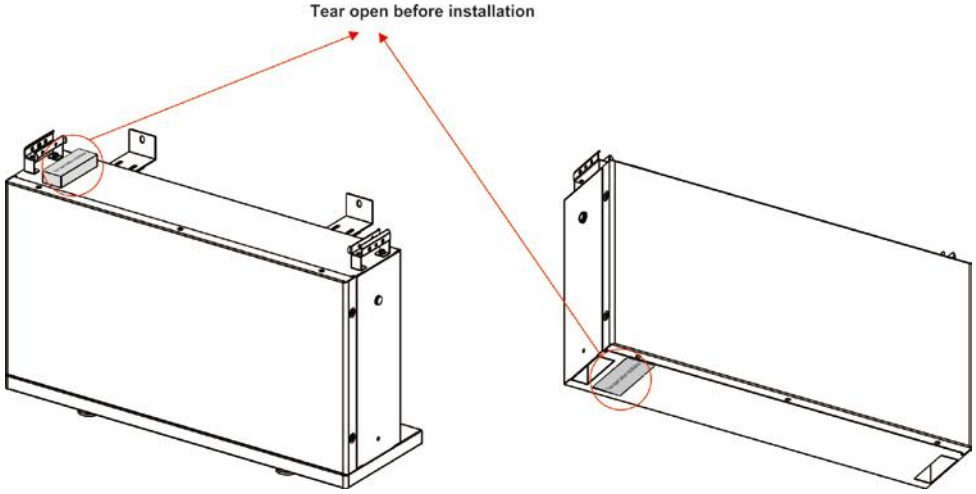

5-2 First, screw the mounting kit-battery onto the battery pack, Then fix the mounting kit wall to the mounting kit battery with screws. Finally, place the battery pack close to the wall for marking, drilling, installing expansion tubes and screws.

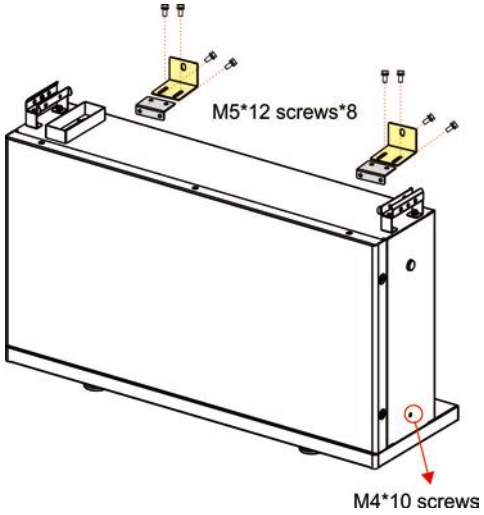

4.3U battery pack:

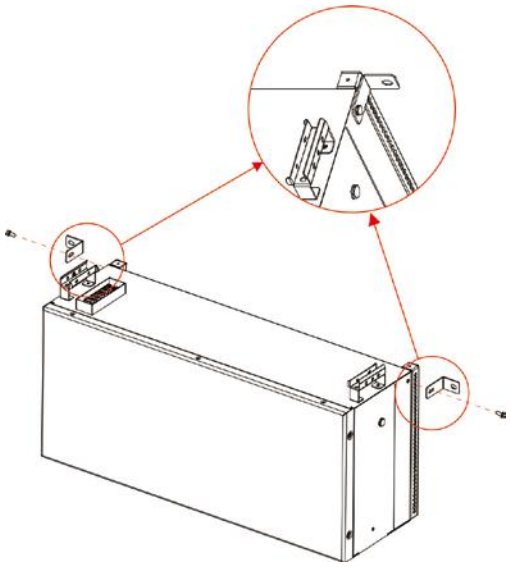

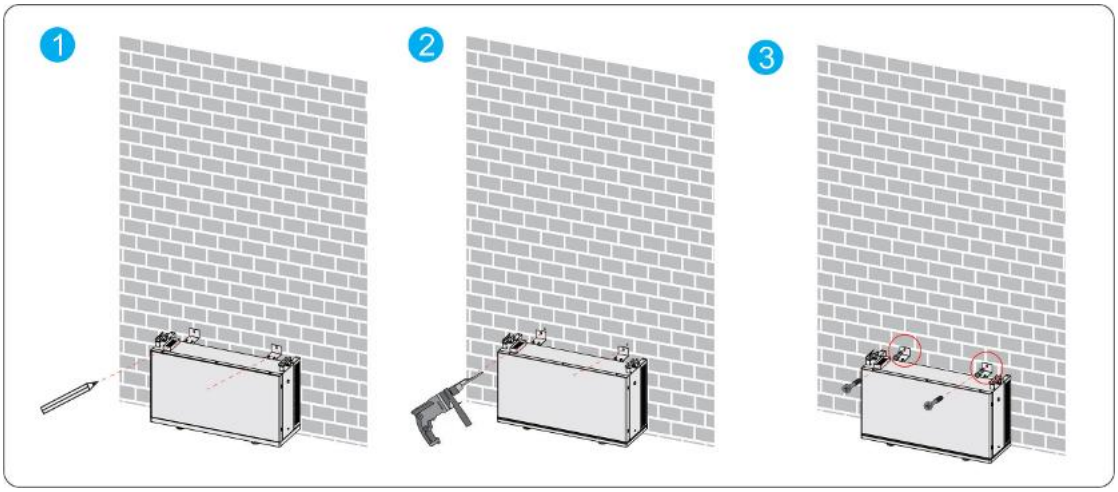

5-3 Install a set of batteries and tighten the screws on both sides at the same time, then continue to stack the next battery module.

Use M4*10 screws to tighten, the screw torque is 2.0N·M When needing to assemble the second battery (and all others), repeat step 5-1 to carry out the installation.

After stacking the battery packs, install mechanical cover on both sides.

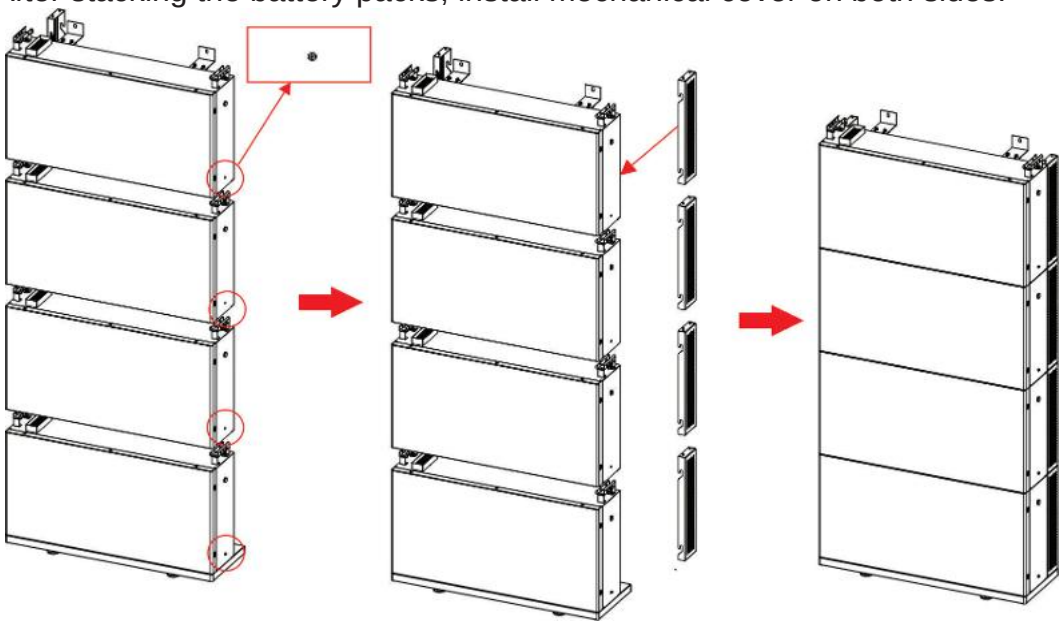

Step 6.Install the hybrid inverter

6-1 The disassembled inverter is shown in Figure 2.1.

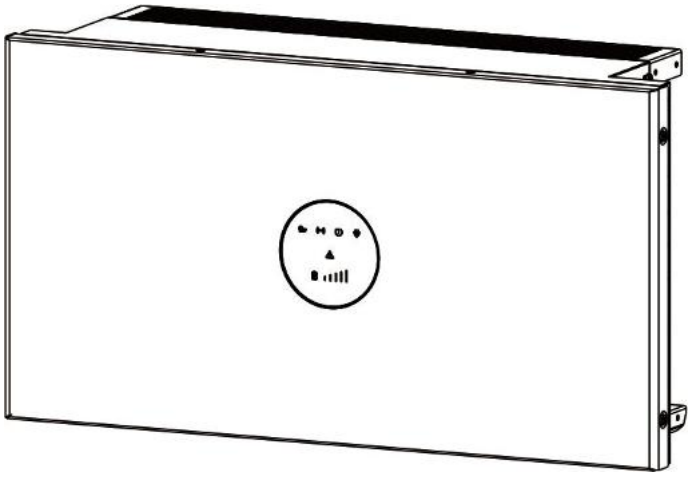

Figure 2.1

6-2 Use the-Positional Punch card to align the holes on the battery pack, mark the inverter mounting hole positions, and drill using a 10mm drill bit. The drilling depth should exceed 50mm. Place the expansion plug into the hole, then secure the base using ST6.3*50mm screws with a torque of 3.0 N·m.



Step 7. Install the lock wall bracket.

Fix the mounting brackets on both sides of the inverter with screws.

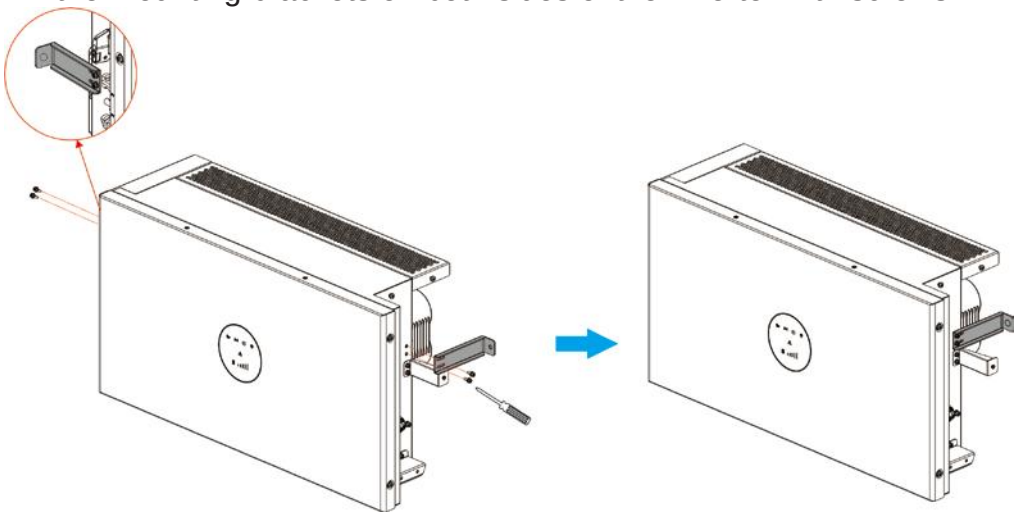

7-1 Stack the inverter on top of the battery pack and secure it using M4*10 screws (fasten into the upper screw holes) with screw a torque of 2.0 N·m.

7-2 Install and secure the wall bracket. After adjusting the wall bracket, fix it using M4*10 screws with a screw torque of 2.0 N·m.

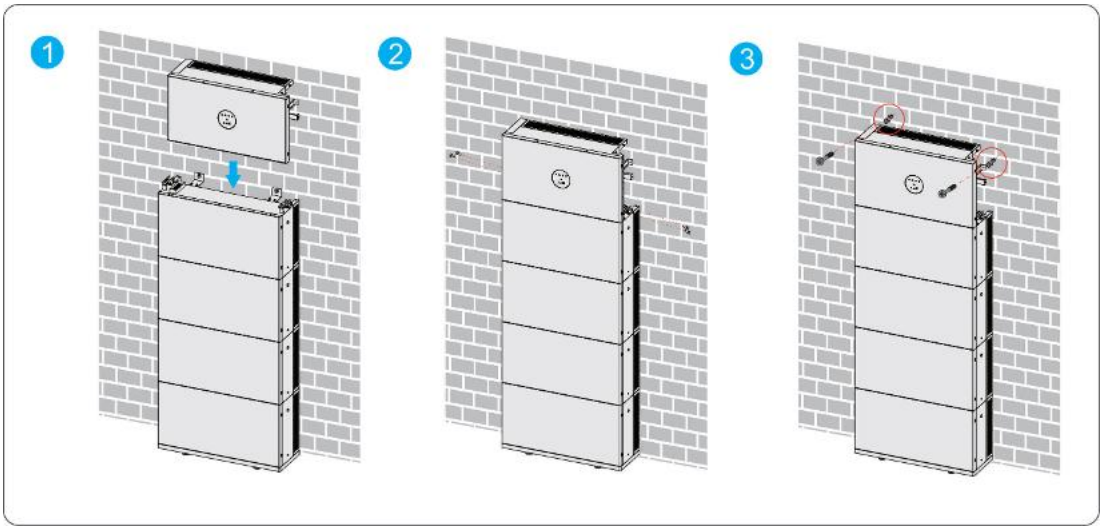

Step 8. Wiring harness installation reference, section 4.4.4

Step 9. Install the side cover. Install the side covers on both sides of the inverter and tighten the screws.

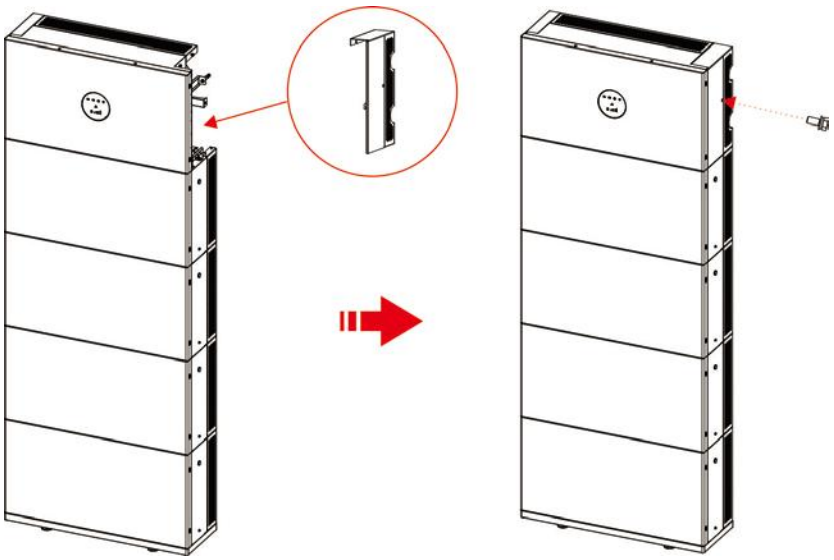

4.4.2 Connecting Battery Packs

The battery power and signal connectors are in blind-inserted mode, so the communication was automatically connected after the battery packs and the inverter were assembled.

4.4.3 Connecting the Inverter and PV Solar Panels

NOTES

- 12 AWG or 4 mm² PV wires are recommended for connection.
- Distinguish the PV polarities and DO NOT reverse the connection.
- Make sure that the input voltage of the PV is within the acceptable input voltage range of the inverter, not higher than 500 V.

⚠ DANGER

Make sure that both the PV Switch inside the cable box and the switch on the PV solar panel are in the OFF position.

NOTE

The scenario where two photovoltaic strings are connected to a single power module requires the model and quantity configuration of the two photovoltaic strings to be consistent. The PV strings should not be grounded to ensure the minimum insulation resistance of the equipment. Before connecting the PV strings to the inverter, the minimum insulation resistance of the PV strings to ground must meet the requirement (R = maximum input voltage / 30mA). If the insulation resistance value is lower than the above requirement, it will trigger an insulation resistance inverter alarm (high insulation impedance).

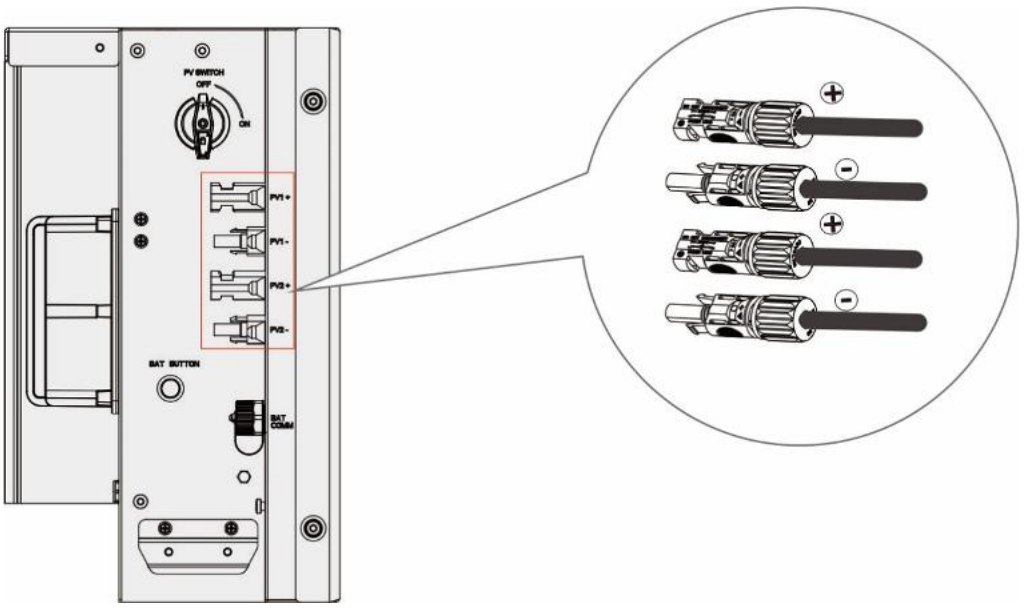

PROCEDURE

Step 1. Use a wire stripper to remove an approximately 8 mm length of insulation layer of the PV wire.

Step 2. Then place the metal connector on top, and finally, use the crimping tool to crimp the meatal connector to the wire.

Step 3. After the metal conductor is crimped to the wire, you have to place the metal connector into the terminal cover, strain reliever and compression sleeve.

Step 4. Finally, you plug the metal connector into the connector housing and screw all the components together using the assembly tool. Properly tightening MC4 solar connector ensures they are water-tight and safe to use. Use a multi-meter to measure the voltage of the PV wire. Make sure that the voltage is lower than 500 V.

Step 5. Plug the PV wires into the PV1+, PV1-, PV2+, and PV2- ports in the inverter and snap them.

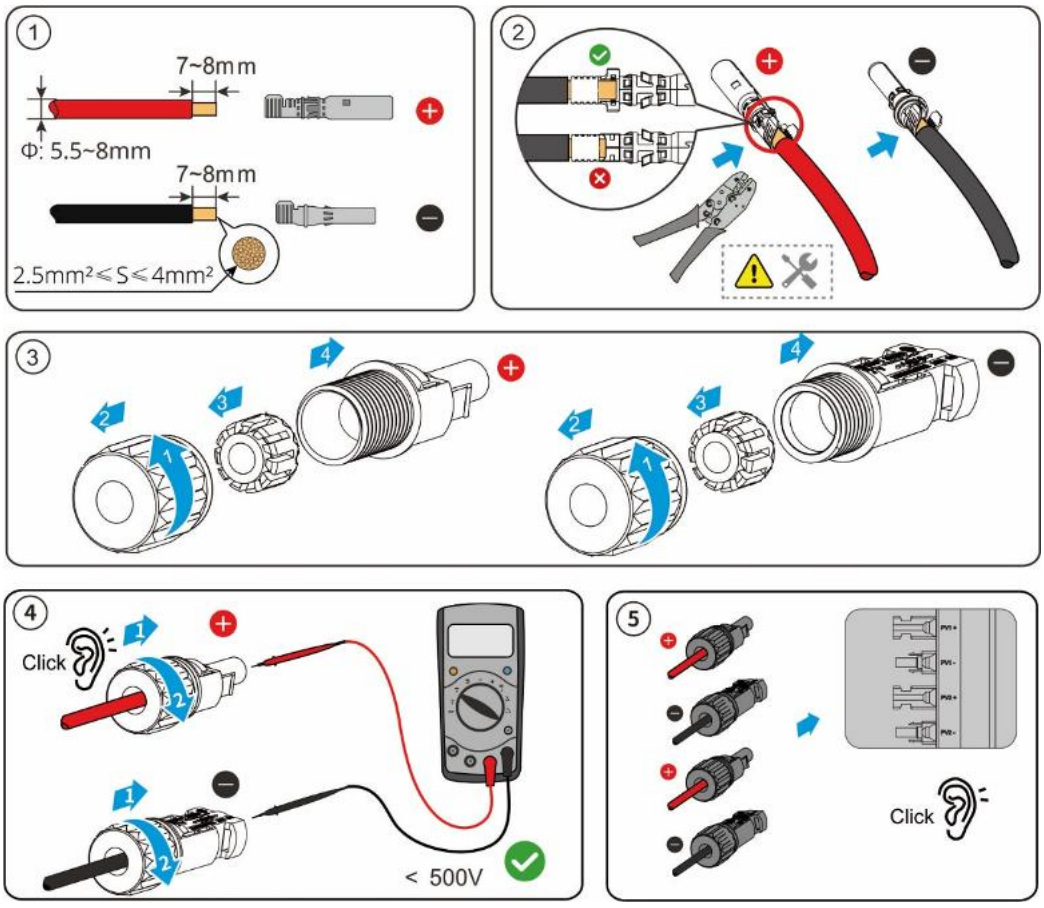

4.4.4 Connecting to Grid and Loads

NOTE

There are three connection ports marked "L", "N", and "⏚ " inside the AC connector. The live wire should be connected to the "L" terminal, the neutral wire to the "N" terminal, and the ground wire to the " " terminal. The L and N wires of the AC cable must not be reversed or short-circuited.

The PE wire of the AC cable must be grounded.

The connector cable only supports multi-strand copper wires, and requires riveted tube/pin type terminals. The terminal specifications are selected according to the wire gauge.

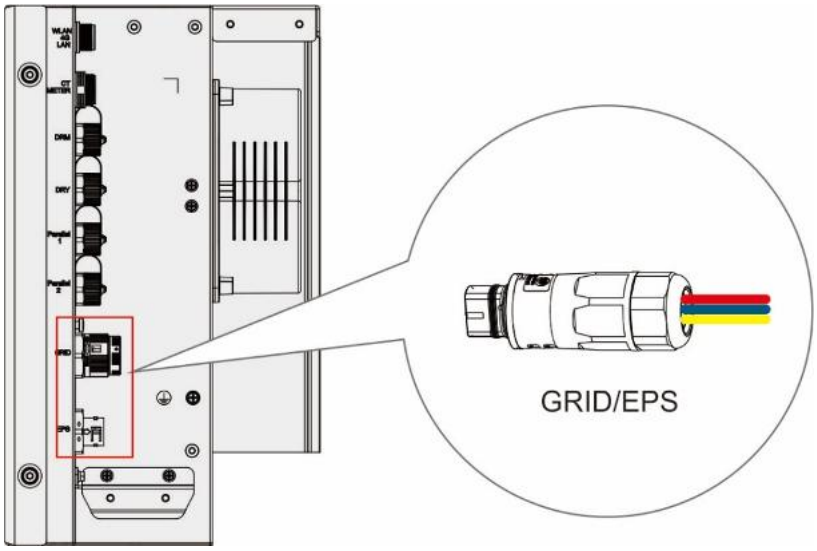

N O T I C E

- Recommended cables: a 10 AWG or 6-mm² cable for EPS connection and a 8 AWG or 8-mm² cable for ON GRID connection.
- Make sure that the resistance of the wires is lower than 1 Ω.
- Make sure that the grounding resistance, measured between the inverter case and the earth terminal of the distribution box, is less than 10 Ω.

⚠ DANGER

Before connection, make sure that the AC current breakers and the LOAD Switch in the distribution box are in the OFF state.

⚠CAUTION

When connecting the wires to the connector, make sure that the phase wires and the earth wire are connected correctly.

⚠CAUTION

Appliances such as air conditioners require sufficient time to equalize refrigerant gases within the circuit, so it takes at least two or three minutes to restart. If power supply is short-circuited and restored within a short period, it can cause damage to these appliances connected to the power supply. Before installing such appliances, make sure that the air conditioner has a time delay function to prevent such damage. In the absence of a time delay function, the inverter triggers an overload fault and cuts off the output to protect your appliances, but internal damage to appliances can sometimes still occur.

NOTE

The type A or B RCD (≥ 300 mA) must be installed on the EPS port of the system according to local regulations.

An AC circuit breaker of these specifications is recommended:

- For ON-GRID connection: 63 A/230 VAC 6 KA
- For EPS connection: 32 A/230 VAC 6 KA

PROCEDURE

Step 1. Use a wire stripper to remove an appropriate length of the jacket and insulation layer from one wire of the AC cable.

Step 2. Disassemble the grid/load connectors in the order shown in the diagram.

Step 3. Unscrew the swivel nut from the threaded sleeve of the AC connector and Insert the wire into the corresponding pins of the AC connector and use a cross screwdriver No.1 (torque 0.8 N.M) to tighten the screws. Then assemble the AC connector components in the order shown in the diagram.

Step4. Disassembly and assembly of waterproof cover.

EPS: Rotate the locker according to the direction instructed by the marks on the locker.

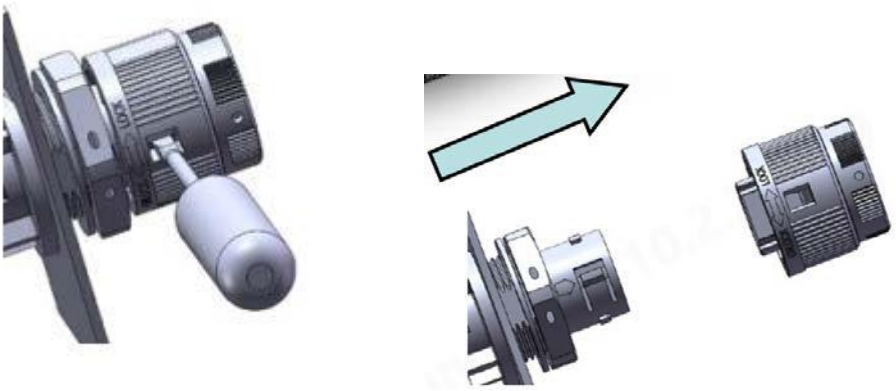

GRID: Use the unlocking tool to press the connector unlock, then pull the dust cover.



Step 5. Plug the AC connector into the ON GRID or EPS port inside the inverter and tighten the connector.

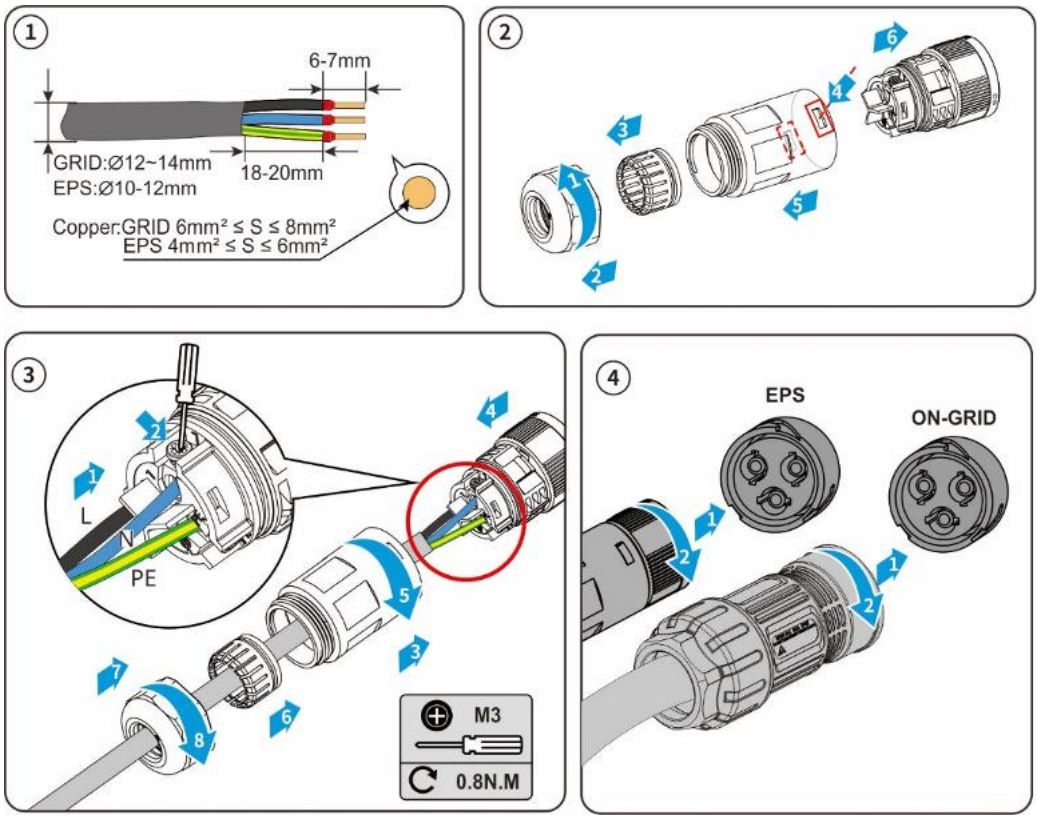

4.4.5 Connecting a Stick Logger

NOTES

For more information, see Stick Logger Quick Guide.

⚠ WARNING

DO NOT hold the logger body to rotate while installing or removing the logger.	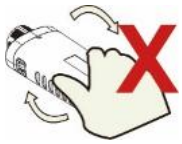

N O T I C E

DO NOT remove waterproof plug.	

PROCEDURE

Step 1. Plug the stick logger into the COM port inside the cable box.

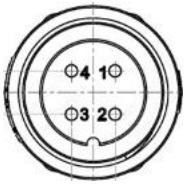

Figure 4-23 Pins of the COM Port

Pin 1: +5V
Pin 2: GND
Pin 3: RS485-A
Pin 4: RS485-B

4.4.6 Connecting External CT(optional)

You must connect external CT or a smart grid meter between the inverter and the power grid.

If you want to connect a smart meter, see Connecting a Smart Meter.

If you want to connect external CT, one CT and a CT& Meter connector are necessary. The connector has six pins, as shown in Figure 4-24. For more information, see Step 2 in the procedure.

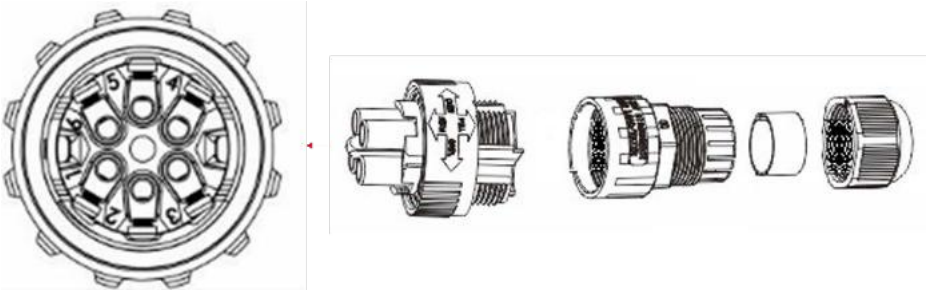

Figure 4-24 Pins of CT& Meter Connector

NOTES

The external CT must be mounted near the power grid side. If the CT test passes but the inverter output power is not acceptable, for example, power cannot be controlled or output power is always 0 W, check the position where the CT are mounted.

Table 4-3 Pin Description of CT& METER Port

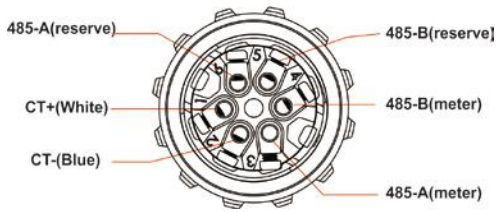

PIN	Description
1	CT+(White)
2	CT-(Blue)
3	RS485-A(meter)
4	RS485-B(meter)
5	RS485-B (reserve)
6	RS485-A(reserve)

PROCEDURE

Step 1. Unscrew the nut, sealing, body, and housing of the CT connector.



1 Housing **2** Body **3** Sealing **4** Nut

Step 2. Thread the wires of the CTs through the nut, sealing, and the body, insert them into the pins of the CT& Meter connector, and then tighten the screws.

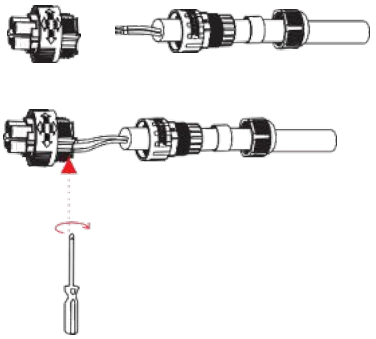

Step 3. Tighten the nut, sealing, body, and housing of the CT& Meter connector.

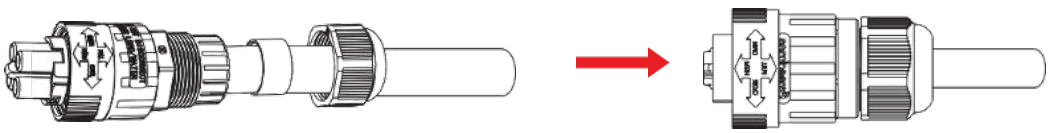

Step 4. Plug the CT& Meter connector into the CT port inside the inverter and tighten it.

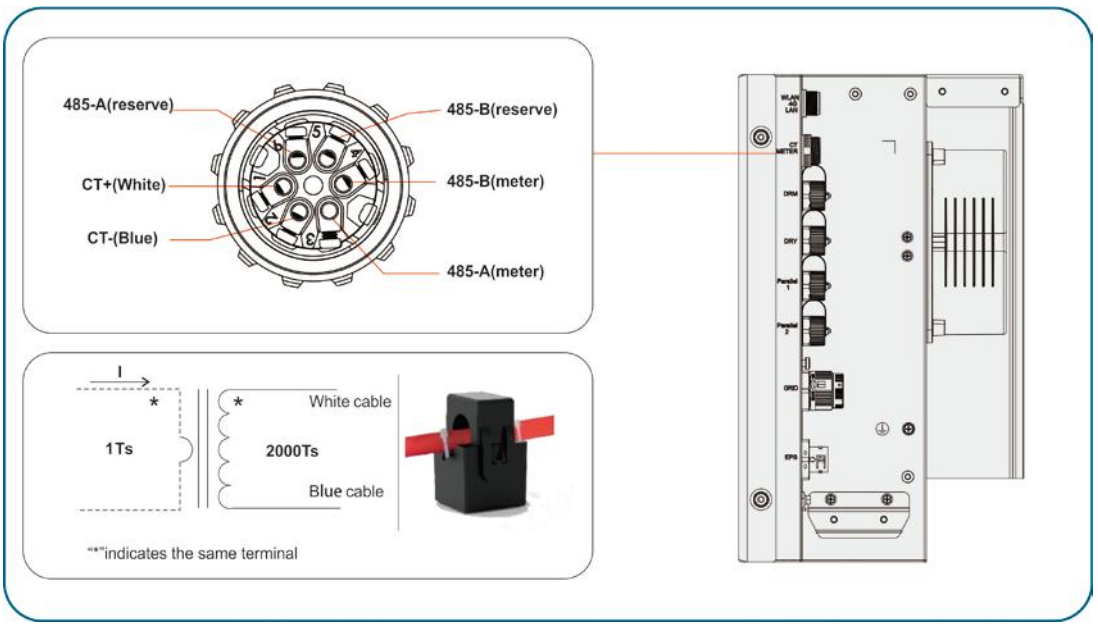

NOTE

The arrow on the CT must point toward the power grid.

4.4.7 Connecting a Smart Meter

You must connect external CT or a smart grid meter between the inverter and the power grid.

If you want to connect external CT, see Connecting External CT.

If you want to connect a smart meter, note that only one meter is necessary for each inverter. The meter must be mounted and connected at the grid transition point (feed-in point) so that it can measure the grid reference and feed-in power.

To connect a smart meter, a CT& Meter connector is necessary and it must be connected to the CT& Meter port inside the inverter.

NOTES

N O T I C E

Currently, only these brands of smart meters are supported: Eastron, Rayleigh, YaDa, and CHNT. You can set the smart meter brand in the integrated EMS. For more information, see the CT OR METER subsection under Advanced Function.

The YaDa YDS70-C16 is recommended. The smart meter with CT is already configured. DO NOT change any settings on the smart meter.

PROCEDURE

Step 1. Prepare the communication wires, power cable, and tools for the meter connection.

Step 2. Follow the meter installation manual to install the meter.

NOTE

The arrow on the CT must point toward the power grid.

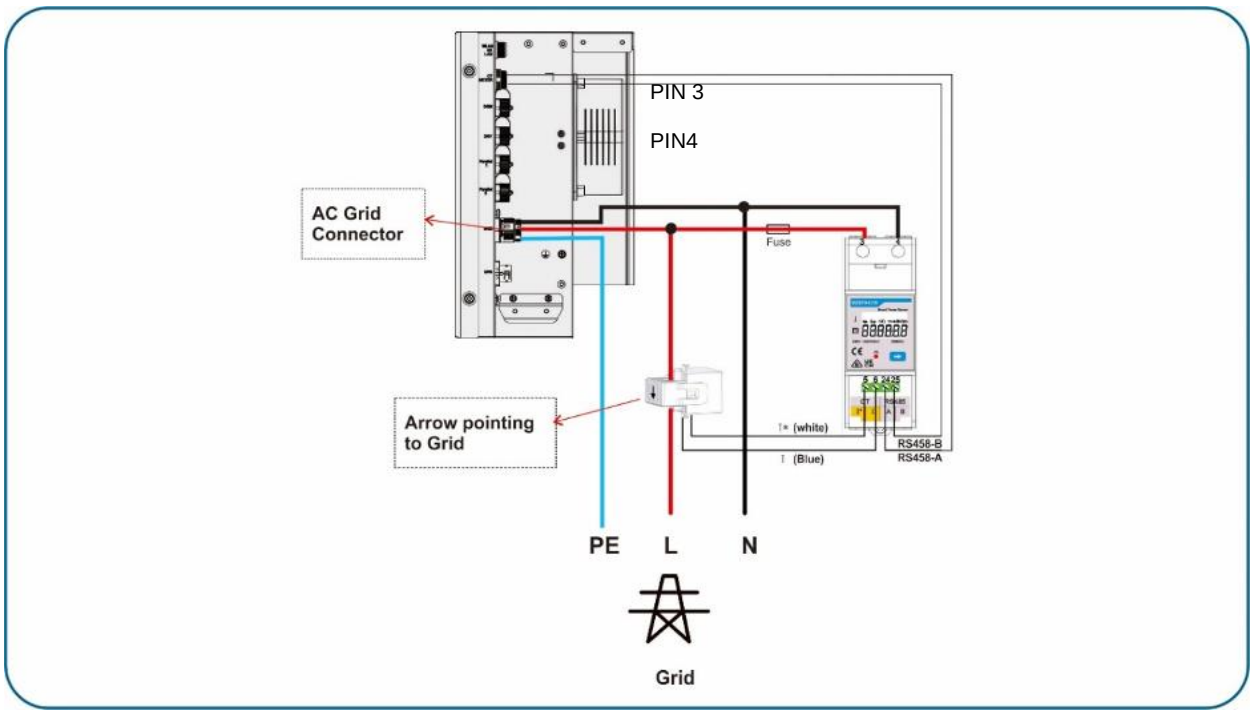

Figure 4-25 Wiring of Smart Meter Connection (Example, YaDa YDS70-C16)

Step 3. Connect the communication line A/B of the meter to pin 3/4 of the CT& Meter connector，and then tighten it.

4.4.8 ESS Connection with Third-party EMS Device

Functional Description

There are 2 RS485 (Modbus RTU) used for monitoring and control. When a third-party EMS is connected for remote power control, the COM port is connected to the data logger, and the CT/METER port is connected to the third-party controller.

Supported inverter models and firmware versions are as follows：

Single phase：E3.68KS-D22/E5KS-D22/E6KS-D22（ARM version 1.2.00 and above）

Notes: If the inverter firmware version is not supported, please contact Kstar local technical team for support or mail to support@kstar.com.

Connection and setup instructions

Wiring Connection

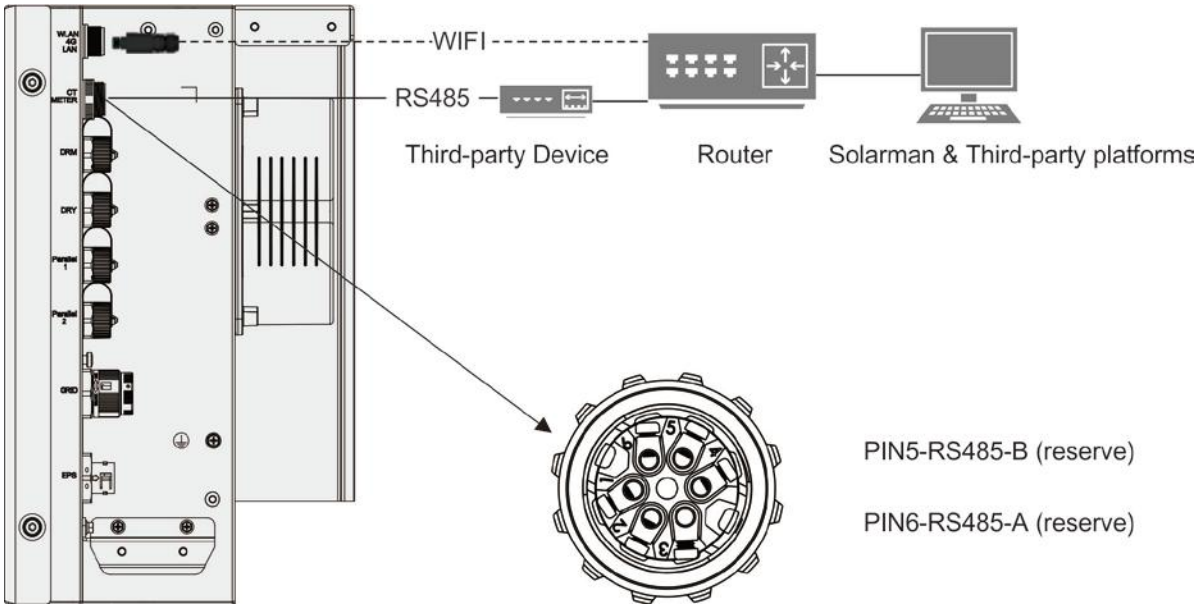

Inverter Setting

When using the Meter port to connect a third-party control device, you need to set the following registers first.

Communication port connection：

Connect the RS485 communication line to PIN5 and PIN6 in CT/METER

Note: The baud rate of the meter port is 9600

Power Control Register Settings: If you need to implement remote control function, you need to set the following registers when the communication connection is completed.

Register	Item	Units	Base type	Data range	Permission type
3270	RS485 Power Control Enable (VPP)		U16	0: Disable 1:Enable Default: 0 (needs to set to 1)	Read/Write
3267	Real-time Inverter power setting (not saved)	1w	U16	0~±Rated Power Default: 0	Read/Write

Please connect and set the third-party EMS according to the above guidelines. If there is more setting required on the third-party EMS, please contact with the third-party EMS provider.

4.4.9 (Optional) Connecting a DRED or an RRCR

NOTES

The E3.68KS-D22/E5KS-D22/E6KS-D22 complies with AS/NZS 4777.2:2015 standard. Its DRM port can be connected to a Demand Response Enabling Device (DRED) in Australia or New Zealand or a Radio Ripple Control Receiver (RRCR) in other areas or countries.

NOTE

When the Australia or the New Zealand grid standard is selected, the DRM port can be enabled to connect a DRED. When other grid standards are selected, this port can be enabled to connect an RRCR. For more information about grid standards, see GRID CODE.

A DRM connector is necessary for the connection. Table 4-4 shows the pin descriptions of the DRM connector.

Table 4-DRM Connector Pin Descriptions

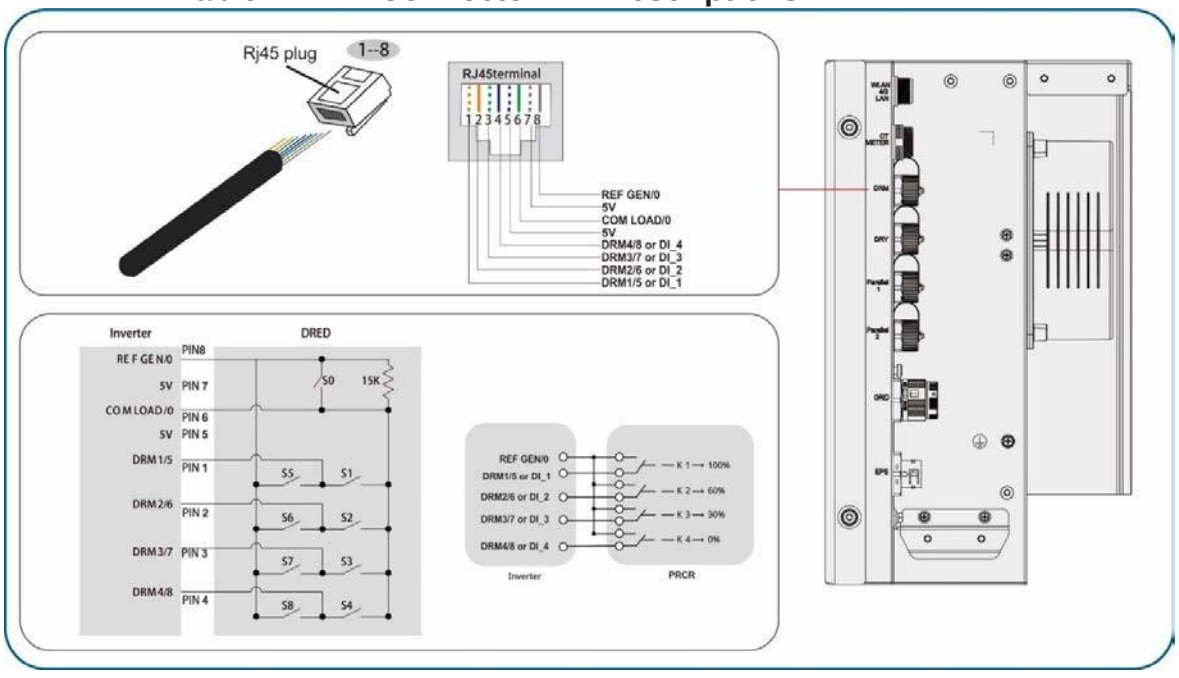

The E3.68KS-D22/E5KS-D22/E6KS-D22 is pre-configured to the following Radio Ripple
Control Receiver (RRCR) power levels as shown in Table 4-5.

NOTE

In the “PIN x” columns, “0” means the corresponding relay is closed and “1” means the corresponding relay is opened.

Table 4-5 RRCR Power Level

PIN8	PIN7	PIN6	PIN5	PIN3	Active Power	Cos(Q)
1	0	1	1	1	0%	1
1	1	0	1	1	30%	1
1	1	1	0	1	60%	1
1	1	1	1	0	100%	1
1	1	1	1	1	100%	1
0	X	X	X	X	Standby	1

PROCEDURE

Step 1. Make sure that DRM is enabled in the integrated EMS. For more information, see the DRM ENABLE subsection under Advanced Function.

Step 2. Use the DRM connector to connect the DRM port inside the cable box to the external device.

4.4.10 (Optional) Connecting a Generator

If you are using a generator, you can connect the generator to the E3.68KS-D22/E5KS-D22/E6KS-D22 energy storage system.

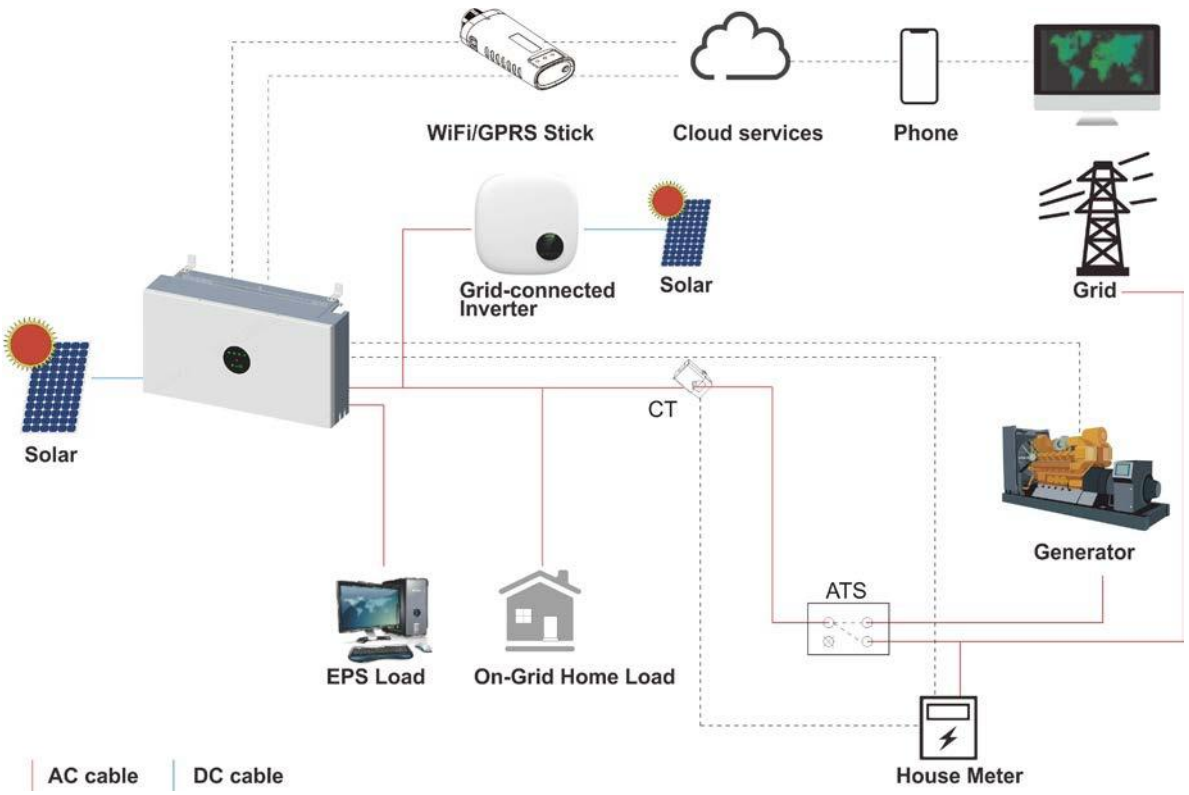

Figure 4-26 Connect a Generator

4.5 Installing a Parallel System

The E3.68KS-D22/E5KS-D22/E6KS-D22 supports installation of a parallel system with more than one inverter. A maximum of four inverters can be connected in parallel. For more information, see Parallel System.

4.5.1 Wiring of a Parallel System

Follow these figures for wiring of a parallel system with two, three, or four inverters.

NOTE

The lengths of the three branch cables from the AC output circuit breaker to the power module must be kept consistent.

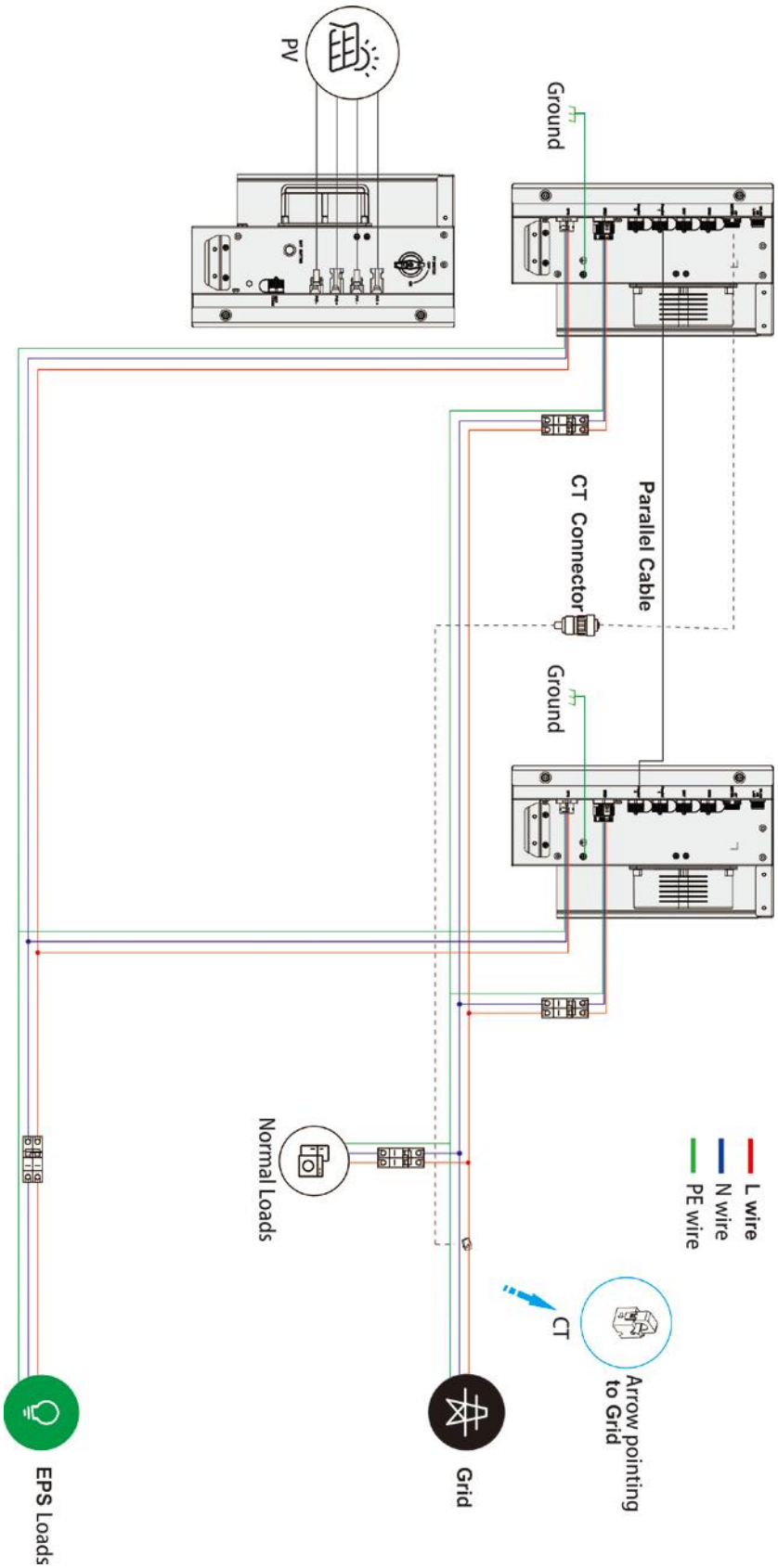

Figure 4-28 Wiring of a Parallel System with Two Inverters

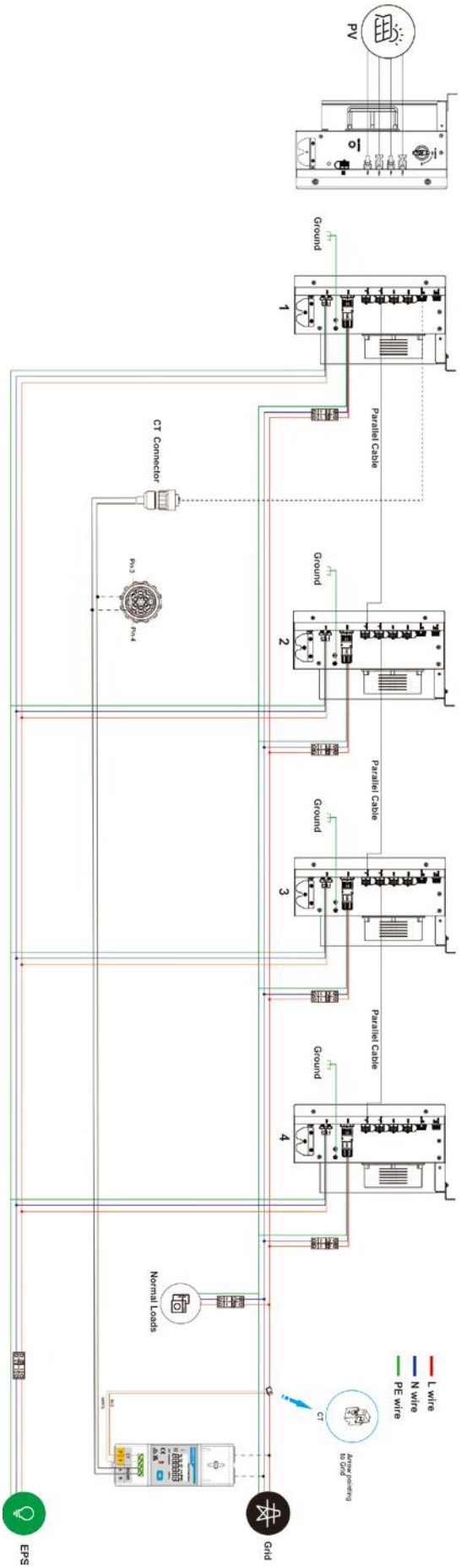

Figure 4-29 Wiring of a Parallel System with Four Inverters

- Connecting the Inverter and PV Solar Panels.
- Make sure that all the battery packs are mounted and connected. For more information, see Mounting the All in One system and Connecting Battery Packs (BP48100P (F) 1-G2).
- Make sure that the grid and load connections to each inverter are correct. For more information, see Connecting to Grid and Loads.
- Decide which inverter serve as the primary inverter.

NOTE

Make sure that only the primary inverter connects a set of CT or an electricity meter. DO NOT connect CT or an electricity meter to the subordinate inverters. When the number of parallel machines exceeds 2, an electric meter must be connected. For more information , see Connecting External CT or Connecting a Smart Meter.

- Make sure that the AC circuit breakers in the distribution box are in the OFF state.
- Prepare the parallel connectors and parallel connector box for parallel connection.

Table 4-7 Pin Description of the Parallel Ports of Parallel Connector Box

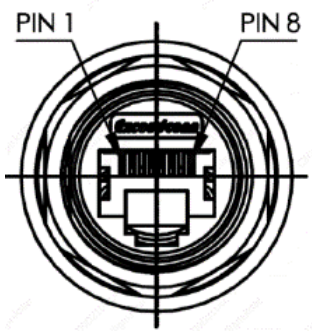

Pin	Description
1	CAN_H
2	CAN_L
3	INV_STATUS_BC
4	BPSIDE_HOLD_BC
5	MASTER_SYN_BC
6, 7, 8	GND

5 Commissioning

Follow the steps in Figure 5-1 to commission the system.

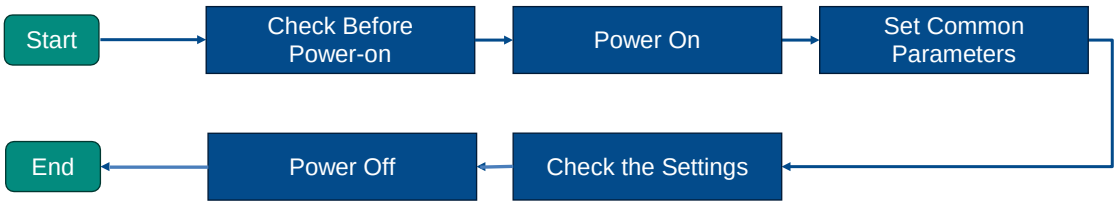

Figure 5-1 Commissioning Procedure

5.1 Checking Before Power-on

Before powering on the system, thoroughly check the installation.

Step 1. Make sure that the E3.68KS-D22/E5KS-D22/E6KS-D22 is firmly fastened to the mounting panel on the wall.

Step 2. Check the electrical connection inside the inverter. Make sure that:

- PV+ and PV- cables are firmly connected and the polarity and voltage are correct.
- The ON GRID and EPS cables are connected firmly and correctly.

Step 3. Check the electrical connection in the inverter. Make sure that:

- The AC circuit breakers for the normal loads are correctly connected.
- The AC circuit breakers for the EPS loads are correctly connected.
- Both breakers are in the OFF state.

5.2 Powering On

N O T I C E

If PV output voltage is 0 V in sunlight, check the PV connection. Check for reverse connection of the PV and make sure that the circuit connection is correct.

Step 1. Turn on the external PV switch.

Step 2. Remove the decorative panels on both sides of the inverter.

Step 3. Beside the inverter, turn on the Battery Button (1~3S) until the indicator light of the power button lights up.

Step 4. Beside the inverter, turn on the PV Switch.

Step 5. In the distribution box, turn on the AC current breaker between the ON GRID port and the grid.

Step 6. In the distribution box, turn on the AC breaker between the EPS port and the EPS loads.

NOTE

The LOAD Switch is necessary only when a EPS load is connected.

Step 7. Reinstall the decorative panels on both sides of the inverter.

5.3 Setting Common Parameters for the System

NOTE

In a parallel system, all settings must be the same for all inverters except for the addresses of the inverters.

When the energy storage system is powered on,
On the mobile phone, enter the settings page through SOLARMAN Smart to configure the general parameters.

Step 1. Set the working mode of the system. For more information, see the WORK MODE subsection under Scene setting.

Step 2. Select the grid standard. For more information, see GRID CODE.

Step 3. Set the language, date and time of the system. For more information, see Equipment Basic Information.



Figure 5-2 Set Common Parameters

If you want to set more parameters for the system, see Setting up the System.

5.4 Checking the Settings

When the energy storage system is powered on, check the settings of the battery pack, PV, and grid to make sure that the system can work correctly.

NOTE

To calibrate the SOC of the battery, after the system is installed, the batteries must be charged to 100% SOC once.

Step 1. Follow these steps to check the battery information:

1.1 Open the decorative covers on both sides of the inverter

NOTE

Make sure no red indicator light is ON.

1.2 Press the power button(1~3s) until the indicator light of the power button are on.

1.3 View battery settings and BMS parameters on the SOLARMAN Smart app.

- Temperature: Depends on the ambient temperature around the system.
- Voltage: Must be within the 50 V ± 3 V range.
- Capacity: The capacity of a battery is 100 AH. When more than one battery pack is connected in parallel, the capacity of the system is 100 AH multiplied by the number of battery packs.

Step 2. After PV input is connected and the PV Switch inside the cable box is turned on, check the information on the **PV1 INPUT** and the **PV2 INPUT** page. For more information, see Viewing the Current System Information.

Step 3. After ON GRID connection is done, check the information on the **GRID VOLT** page. For more information, see Viewing the Current System Information.

5.5 Powering off

⚠ WARNING

To prevent damage or personal injury, after the equipment is turned off, DO NOT begin maintenance work until 5 minutes have passed.

Step 1. If EPS loads are applied, turn off the LOAD Switch In the distribution box and the AC current breaker between the LOAD port and critical load.

Step 2. In the distribution box, turn off the AC current breaker between ON GRID port and the grid.

Step 3. Press the power buttons (1~3s) until the indicator light of the power button goes out.

Step 4. Beside the inverter, turn off the PV Switch.

⚠	**Precaution:** Please make sure that the battery is not being charged or discharged before performing a shutdown.

6 System Operation

6.1 Download APP and registration

If you are an household user, please scan QR code below to download SOLARMAN Smart APP. Or you can log in to https://home.solarmanpv.com

SOLARMAN Smart

Then go to SOLARMAN Smart and register.
Click "Register" and create your account here.

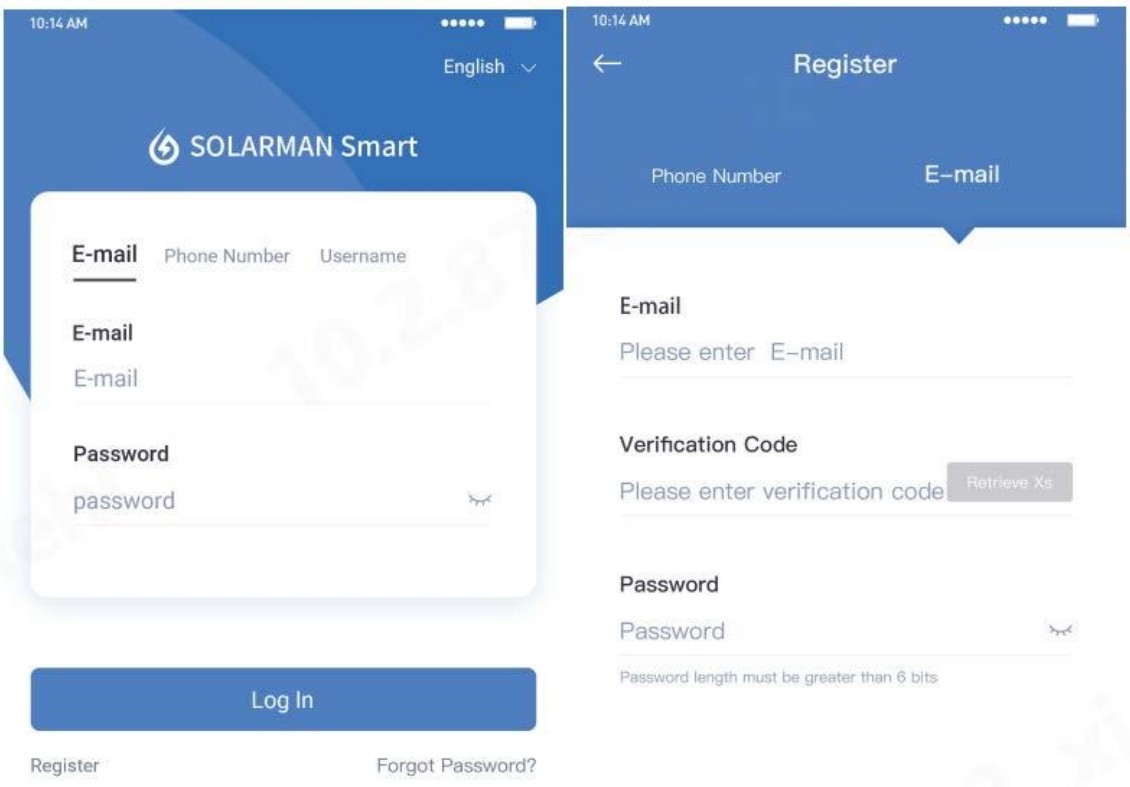

6.2 Local Mode

After registration, enter the SOLARMAN Smart APP, tap "Applications" at the bottom of the screen, select "Local Mode," then scan the QR code on the data logger with your phone or manually enter the SN number. Once the communication between the inverter and the app is established, you can access the inverter settings interface.




14:24
Dashboard
Search
My Watchlist
Device Library
Logger
All Quantity: 85459
Online
6881
Offline
78578
Alerts
0
Click to see more
Total Plants 61
Incomplete Plants
11
Offline
36
Partially Offline
4
Alert
12
Total Production Power
14.3 MW
Dashboard
Monitor
Alerts
Applications
Me


14:24
Applications
WiFi Configuration
Local Mode
Top Up
Device Self-Test
Photovoltaic protection
APN configuration
Dashboard
Monitor
Alerts
Applications
Me


15:51
Local Mode
Enter SN
Turn on Flashlight

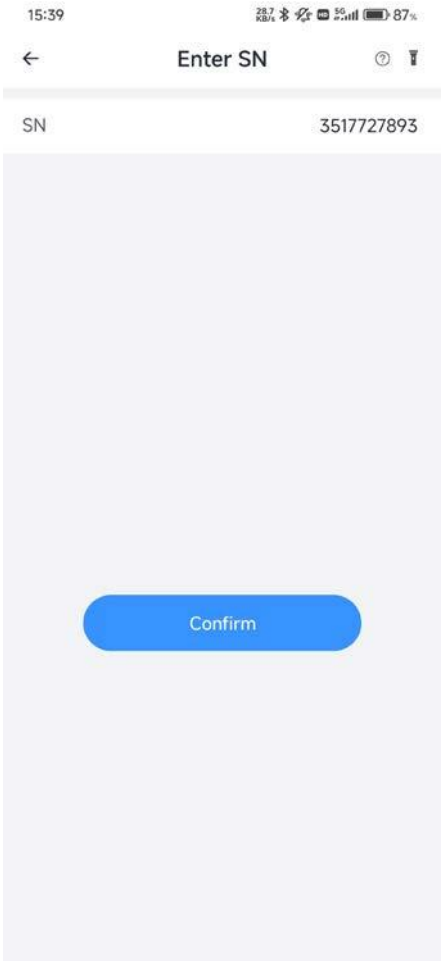
15:39
Enter SN
SN
3517727893
Confirm

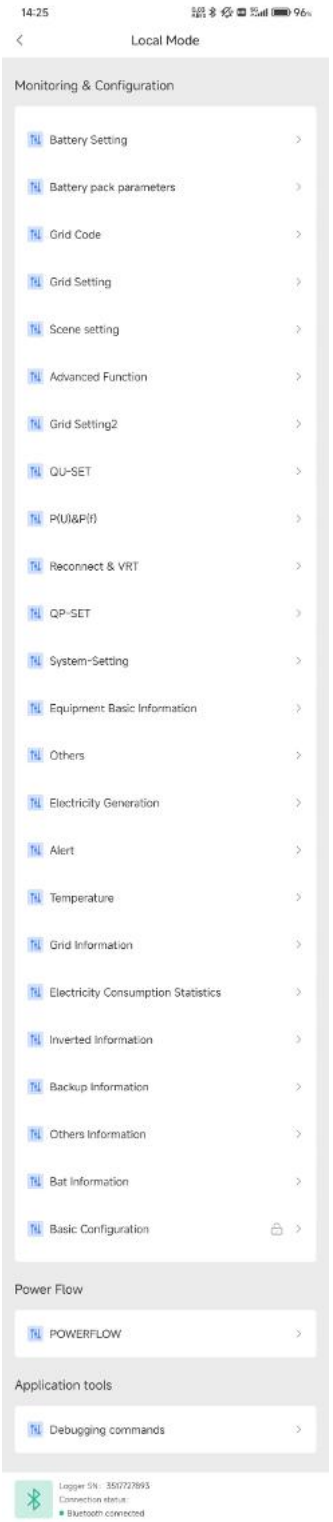

6.2.1 Battery setting

In this setting, battery parameters can be configured.

①. ON grid/Off grid discharge depth: Set the maximum depth of discharge (DoD) for both grid-connected and off-grid modes. The default is 90%, with an adjustable range of 5% to 90%. Additionally, ensure that the depth of discharge enable setting is activated.

②. Bat discharge/charge power setting: Set the battery discharge and charge

power percentage. The adjustable range is 0–100%, with a default value of 100%.

③. Bat set charge current: Set the battery charging current, adjustable range: 1~125A.

④. Wake-up BMS Time: When the battery is in hibernation, the inverter wakes the battery at regular intervals, with a configurable range of 5-300 minutes. At the same time, the depth of discharge enable setting needs to be activated.

⑤. Force charge/discharge Enable: There are three modes: Invalid, Charge, and Discharge.

⑥. Charge from grid Max SOC: After setting the Charge source, the SOC for charging the battery from the Charge source can be configured.

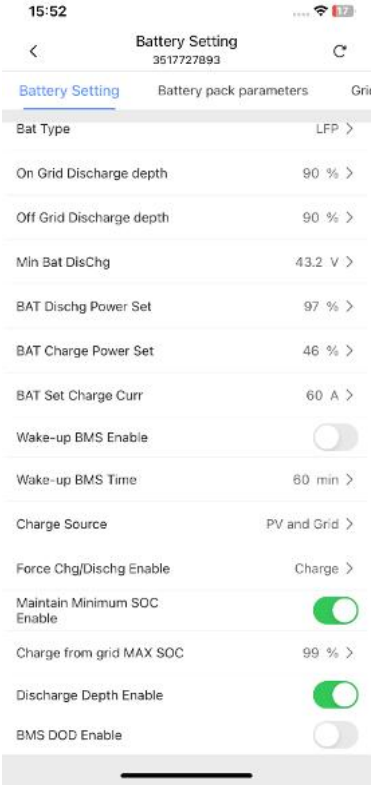

6.2.2 Battery pack parameters

Under this project, you can view the SOC, SOH, cycle count, and cumulative discharge of all connected battery packs.



6.2.3 Grid CODE

Under this setting, you can choose the grid standard that applies to your energy storage system, with the default set to the local standard.

NOTE

Local is a customized grid standard that specifies the widest output voltage range and output frequency range. It is applicable to most energy storage systems.

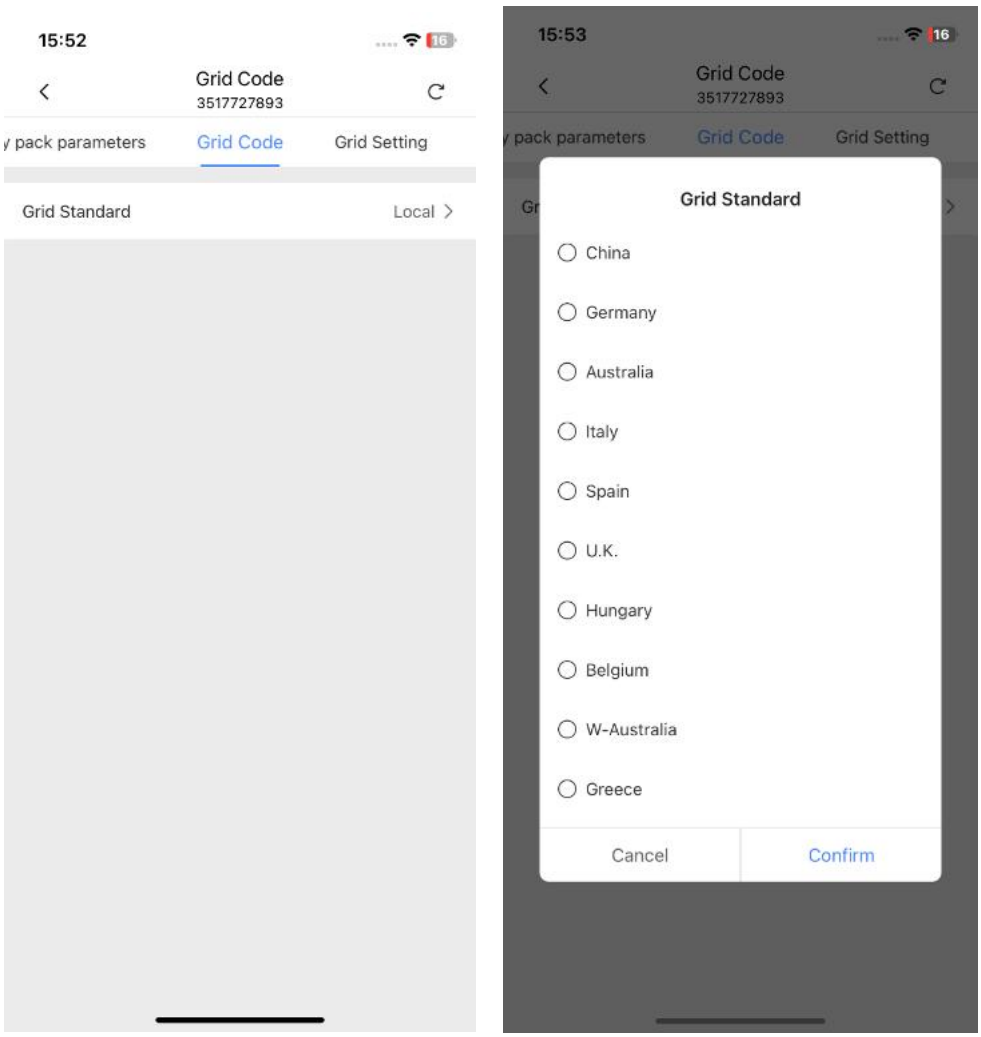

Table 6-1 lists the specifications of different grid standards.

Table 6-1 Grid Specifications

Grid		Output Voltage Range (VAC)	Output Frequency Range (Hz)	Start Delay (s)
1	China	187–252	49.5–50.2	30
2	Germany	184–264	47.5–51.5	60
3 Australia	AUS-A	180–265	47–52	60
	AUS-B	180–265	47–52	60
	AUS-C	180–265	45–55	60
4 Italy	CEI0-21	195–264	49.8–50.2	60
	CEI0-21 ACEA	195–264	49.8–50.2	60
5	Spain	196–253	48–50.5	180
6	U.K.	184–264	47–52	180
7	Hungary	196–253	49–51	300
8	Belgium	184–264	47.5–51.5	60
9	New Zealand	180–260	45–52	60

10	Greece	184–264	49.5–50.5	180
11	France	184–264	47.5–50.4	60
12	Bangkok	198–242	49–51	150
13	Thailand	198–242	47–52	60
14	South Africa	180–260	47.0–52	60
15	50549	184–264	47.5–51.5	60
16	Brazil	184–264	59.5–60.5	60
17	0126	184–264	47.5–51.5	60
18	Ireland	184–264	47–52	180
19	Israel	195.5–253	47.0–51.5	60
20	Poland	195.5–253	49.00–50.05	60
21 Chile	Chile-BT	176.0–242	47.5–51.5	60
	Chile-HD	198.0–242	49–51	300
	Chile-LD	198.0–242	49–51	300
22	Local	150–280	45.0–55	30
23	60Hz	184–264	59.5–60.5	60
24	Denmark	195.5–253.0	47.5–51.5	60
25	Sweden	195.5–253.0	47.5–51.5	60
26	Austria	184–264.5	47.5–51.5	300

6.2.4 Grid setting

When you select the grid standard in GRID CODE, these parameters are set automatically. During operation, when the inverter detects that these settings have been reached or exceeded, the inverter stops generating power.

NOTE

Changing the setting of these parameters is not recommended.

After adjusting one or more parameters, please restart the system. Reboot the inverter to view System-setting

Here are the settings:

- **POWER FACTOR**: The acceptable range is L0.8–L1.00 and C0.8–C1.00. The default setting is PF1.0.
- **REACT POWER**: The acceptable range is L00%–L60% and C00%–C60%.

• **Reactive power control**: By default, both are disabled.

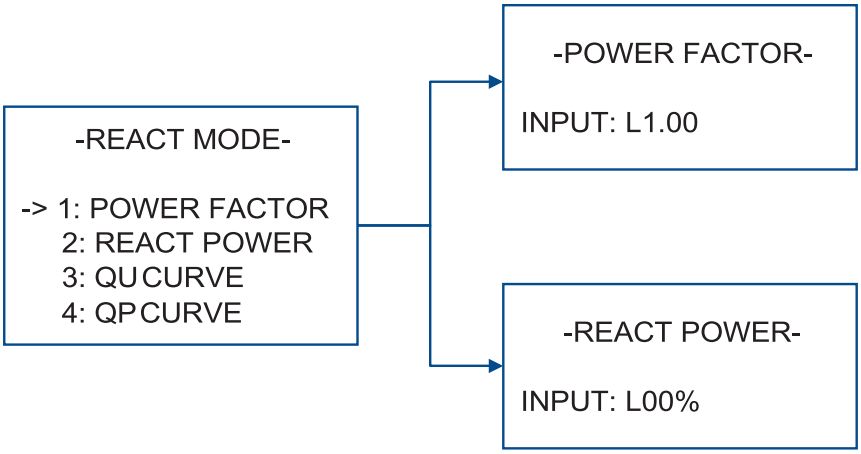

GRID POWER

Active setting: The setting value is a percentage of the rated power of the system. It can be set from 0% to 100%, and the default value is **100%**.

GRID U and GRID F:

Table 6-3 BYPASS Parameters for Run Setting

Parameter	Description	Default
GRID U MAX	Maximum voltage of the grid	270 VAC
GRID U MIN	Minimum voltage of the grid	180 VAC
GRID F MAX	Maximum frequency of the grid	52.5 Hz
GRID F MIN	Minimum frequency of the grid	47 Hz
BYPASS U MAX	Maximum voltage of the grid	270 VAC
BYPASS U MIN	Minimum voltage of the grid	180 VAC
BYPASS F MAX	Maximum frequency of the grid	52.5 Hz
BYPASS F MIN	Minimum frequency of the grid	47 Hz

OVER VOLT and UNDER VOLT：

By default, **OVER VOLT** and **UNDER VOLT** are disabled. You can enable them and set the voltages.
OVER VOLT: When it is enabled, you can set **VOLT**. If the AC output voltage is higher than the set value, the output power decreases. The default value of VOLT is 270 V.

UNDER VOLT: When it is enabled, you can set **VOLT**. If the AC output voltage is lower than the set value, the output power decreases. The default value of VOLT is 200 V.

OVER FREQ and UNDER FREQ
By default, **OVER FREQ** and **UNDER FREQ** are disabled. You can enable them and set the frequencies:
OVER FREQ: When it is enabled, you can set **FREQ**. If the AC output frequency is higher than the set value, the output power decreases. The default value of FREQ is 52 Hz.
UNDER FREQ: When it is enabled, you can set FREQ. If the AC output frequency is lower than the set value, the output power decreases. The default value of FREQ is 48 Hz.



By default, the above four types of derating are disabled. If you need to use this function, you need to enable it manually.

QU-Response Time

QU-Response Time allows you to set the necessary time for the output reactive power to reach the grid standard level. The selected grid standard determines the time, so DO NOT change it if the grid is not changed. The default value is 15 seconds

Soft Start Ramp Rate

Soft Start Ramp Rate means the change of output power per minute.

The selected grid standard determines the rate, so **DO NOT** change it if the grid is not changed. The value of **100%** means that the output power can reach the rated power within one minute. The range for this parameter is **0%** to **300%**, and the default value is **100%**.

GFCI CHK ENB

The E3.68KS-D22/E5KS-D22/E6KS-D22 supports a connection of ground failure circuit interrupter to monitor the AC grid connection. By default, this feature is enabled.

VRT ENABLE

VRT ENABLE is to enable or disable voltage-ride-through.

When you select the grid standard in **Grid Setting**, **VRT ENABLE** is set automatically.

NOTE

Changing the setting of **VRT ENABLE** is not recommended.

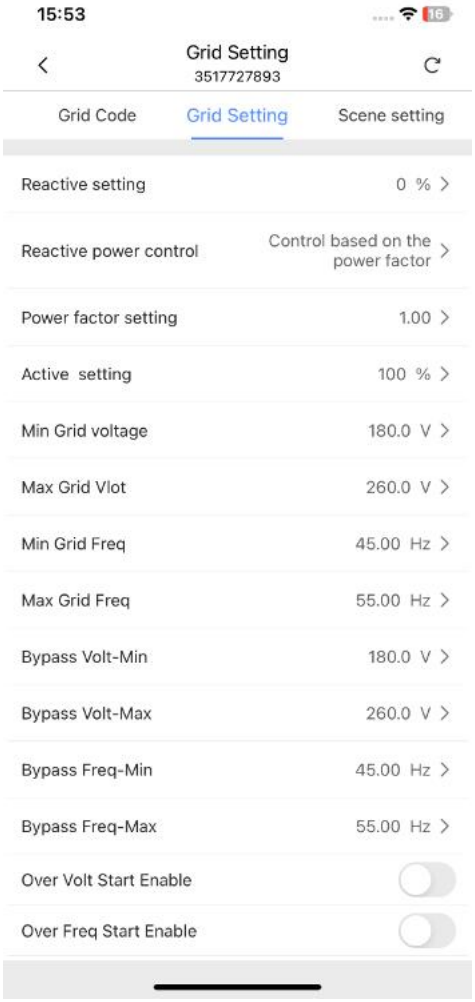

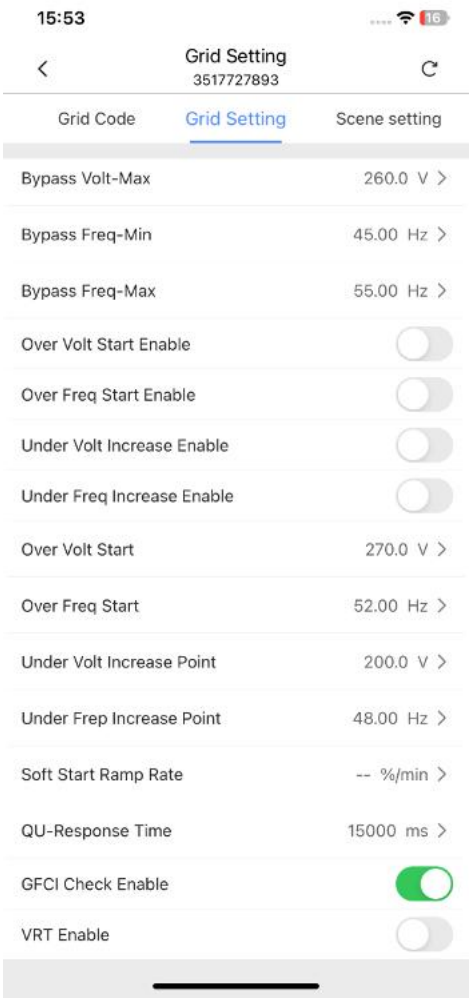

6.2.5 Scene setting

WORK MODE

The E3.68KS-D22/E5KS-D22/E6KS-D22 supports three working modes: **SELF CONSUME, PEAK SHIFT,** and **BAT PRIORITY.** For more information, see Working Modes.

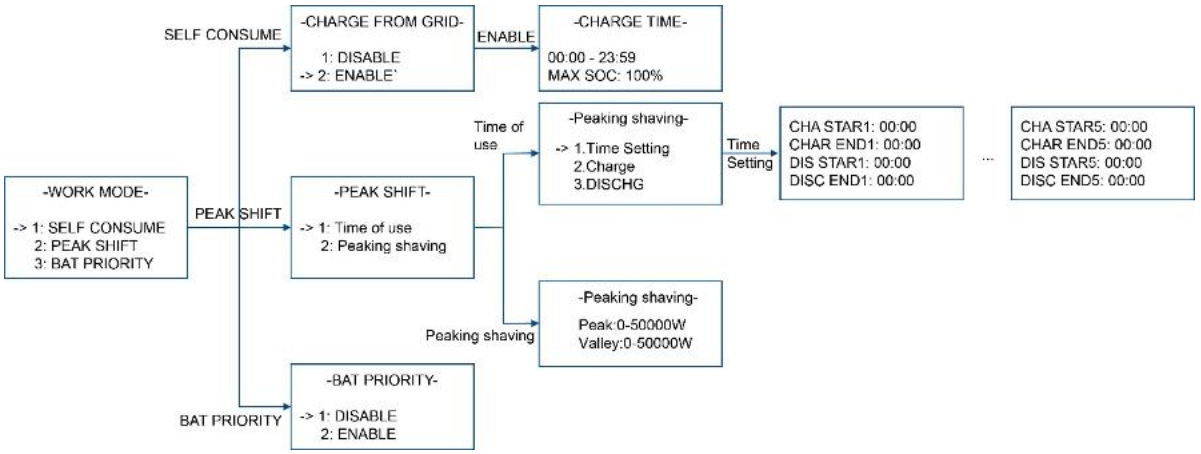

SELF CONSUME: This is the default working mode. In this mode, the batteries are charged by the PV panel by default.

On the **CHARGE FROM GRID** page, you can enable the batteries to be charged by the grid. When SELF consumption charge Enable is enabled, you can set the time(up to two each) and the maximum SOC for charging. Charging will automatically stop when the set time or MAX SOC is reached.

PEAK SHIFT: During the charging time, the batteries are forced to be charged by the grid and/or the PV panels. During the discharging time, the batteries are forced to be discharged to the connected load. you can set times for charging and discharging (up to five each), select **CHARGE** or **DISCHR** through the **SOLARMAN** Smart App to charge or discharge the battery. During the charging time, the batteries are forced to be charged by the grid and/or the PV panels. During the discharging time, the batteries are forced to be discharged to the connected load.

BAT PRIORITY: This mode is also known as the UPS mode, which is used in situations where a battery serves as a EPS power source. The battery only discharges when the grid power is down, helping to extend the battery's lifespan. If the battery is not fully charged, it will continue charging, and the charging power can come from either solar power or the utility grid. The goal is to keep the battery fully charged. During a power outage, the system operates off-grid to provide power to the EPS, which can be understood as the EPS function of a UPS.

ZERO EXPORT

By default, this feature is disabled. When the feature is enabled, the system outputs power to the grid and you can set the power limit in the range from 10 W to the rated power of the system.

NOTE

Max. DC input Voc should be less than 430V in zero-export application.

Peak Shaving Power Enable

After enabling the peak shift power control, you can set the peak power and valley power of the load power.

NOTE

The peak power setting value must be greater than the valley power, otherwise the setting will be invalid.

The operation logic is shown in the figure:

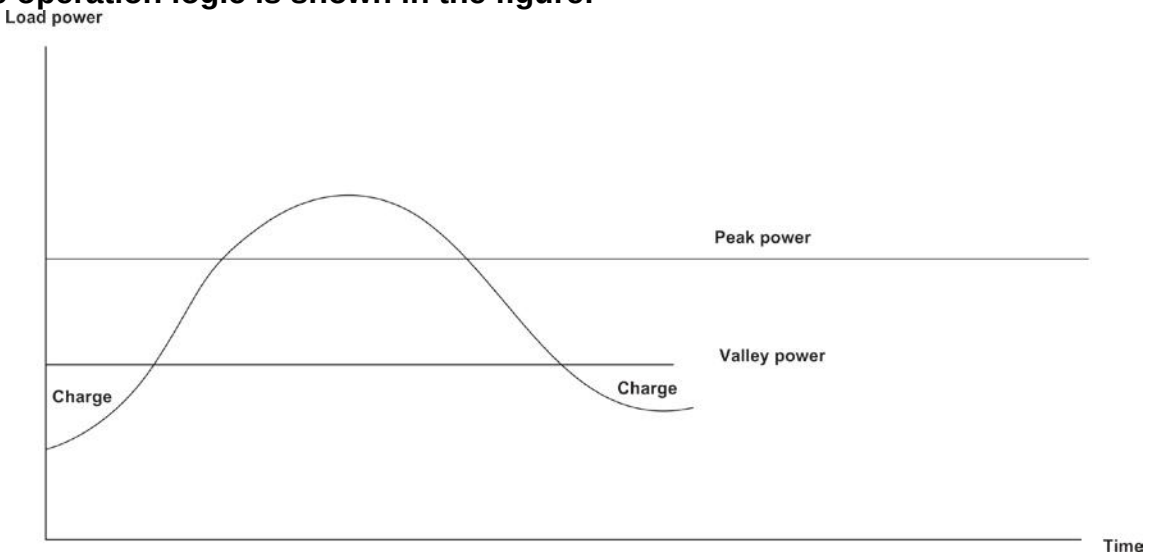

Demand control Enable

①. This function is applicable to any operating mode of the inverter when drawing power from the grid.

②. /his function is designed to limit the amount of power drawn by the inverter from the grid. By enabling the "demand control" setting and setting the "demand power" to a range of 0–20,000W, when this function is enabled, the load power + charging power = demand power.

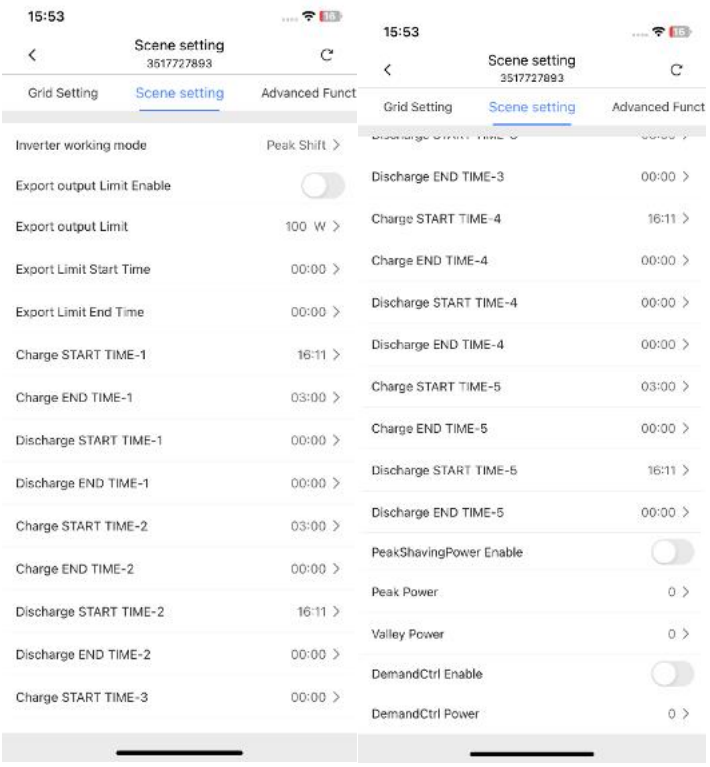

6.2.6 Advanced Function

REMOTE CTRL

By default, this feature is enabled/

Remote control to turn the inverter on and off. By default, this feature is enabled.

START DELAY

By default, when power is supplied to the inverter, there is a 30-second delay before the inverter starts.

You can increase or decrease the delay time in the range of 20–300 seconds. See GRID CODE for the start delay time for the selected grid standard.

GENERATOR

You can use a generator, for example, a wind generator or a diesel generator, as a EPS supply to the E3.68KS-D22/E5KS-D22/E6KS-D22 energy storage system.

By default, this feature is disabled. When the grid power is not available, you can manually enable the generator mode and connect the load to the generator.

ISLAND

- To enable anti-islanding protection. This is for use by maintenance personnel only.

BAT WAKE-UP

The battery will go to sleep in these states:

- Over-discharge protection.
- No communication between the battery and the external and no charging or

discharging current for a period.

By default, the system monitors the SOC and DOD of the batteries. You can set the system to wake up the batteries from sleep and to check the SOC and DOD at a set interval.

HEATING FILM

NOTE

Only applicable to the batteries with heating films.

By default, the setting is AUTOMATIC. It means the film is automatically turned on or off based on the ambient temperature.

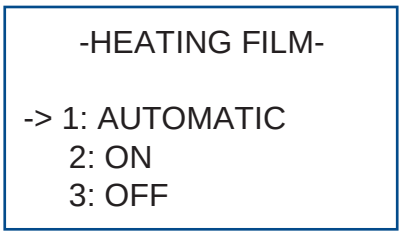

CT OR METER

The E3.68KS-D22/E5KS-D22/E6KS-D22 support connecting external CT or a smart meter for measuring the energy consumption.

By default, CT is selected. If you want to connect a smart meter, five brands are supported currently. The YADA YDS70-C16 is recommended.

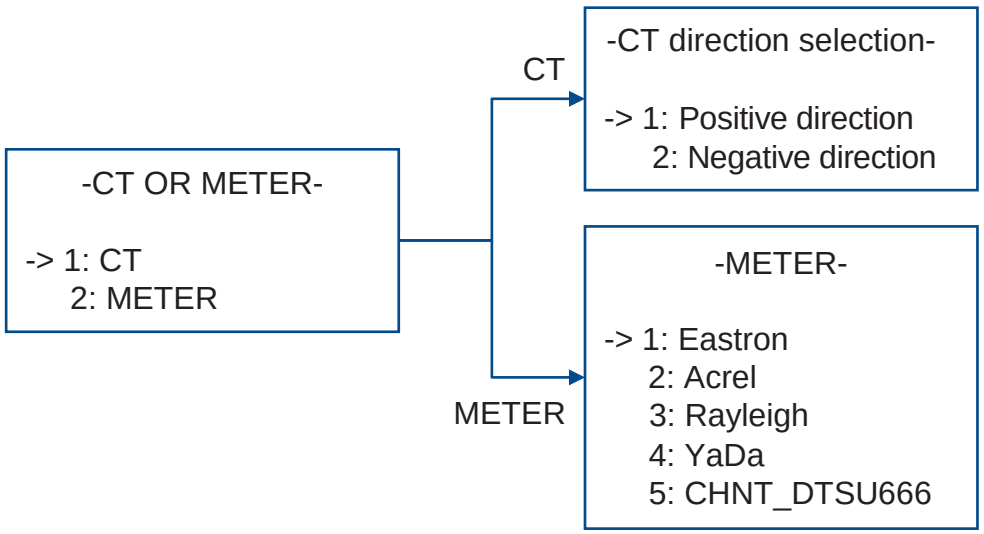

PV INPUT

There are two modes for PV inputs: independent and parallel. Set the appropriate PV input mode based on the actual connection of the PV strings.

The default setting is INDEPENDENT. If independent mode is selected when the PV strings are actually connected in parallel, it results in an imbalanced distribution of power in the PV strings.

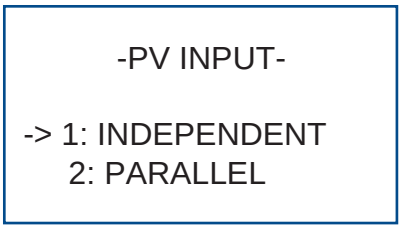

DRM ENABLE

The E3.68KS-D22/E5KS-D22/E6KS-D22 supports DRM.

By default, this feature is disabled. In the countries where DRM is mandatory, enable the DRM feature. When the DRM connection is done, you must set **DRM ENABLE** to **ENABLE**. For more information about DRED connection, see (Optional) Connecting a DRED or an RRCR.

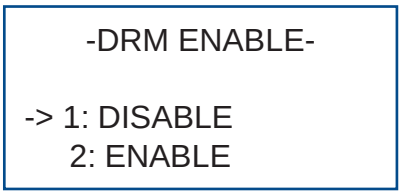

AC COUPLE

If you want to connect an inverter to your PV panels to build an AC-coupling system, you must enable **AC COUPLE**.

By default, this feature is disabled. For more information, see AC-coupling System.

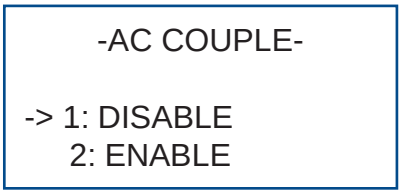

EPS ENABLE

By default, the E3.68KS-D22/E5KS-D22/E6KS-D22 can automatically switch to EPS power when a grid power failure occurs.

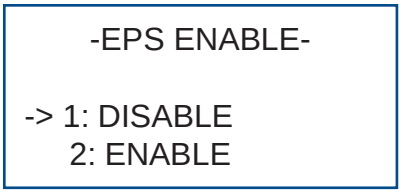

PARALLEL

When more than one inverter is installed in parallel, you must enable **PARALLEL** and set the addresses for the inverters.

When a parallel system is installed and **PARALLEL** is enabled, assign an address (a value from 1 to 4) to each inverter. The address of the primary inverter must be set to 1. A maximum of four inverters are supported. For more information, see Installing a Parallel System.

By default, this feature is disabled.

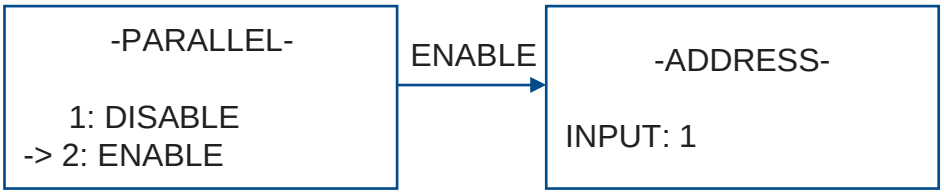

PV Start Voltage

This setting allows you to configure the inverter's PV startup voltage. When the PV voltage is lower than the startup value, the inverter will not operate.

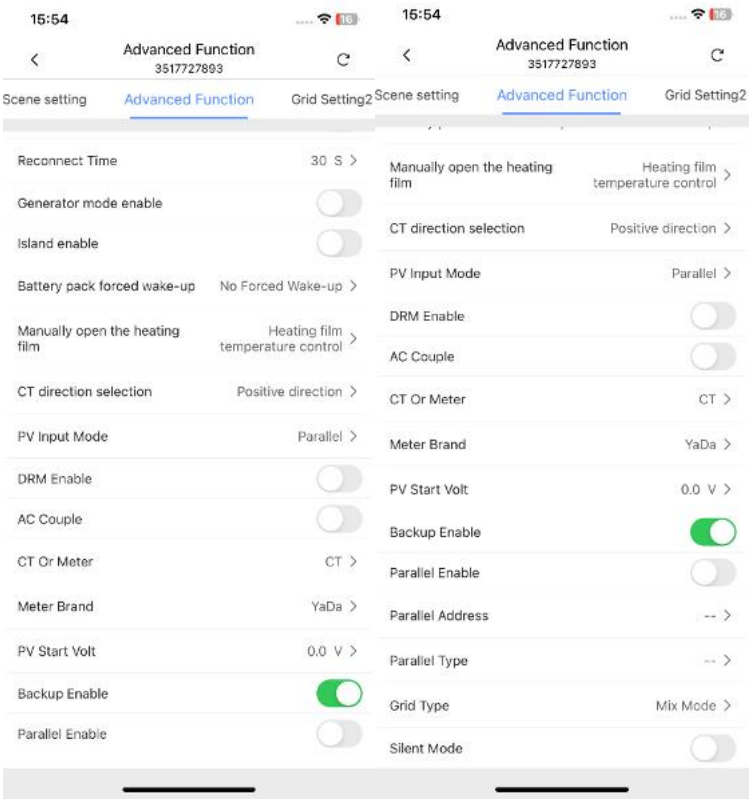

NOTE

The settings GRID setting 2, QU-Set, P(U)&P(f), Reconnect &VRT, and QP-SET are all set to default. It is not recommended for non-staff to modify these settings.

6.2.7 System-setting

Reboot Inverter

The command can be issued to restart the inverter.

Factory Data Reset

You can reset the inverter to the default factory settings.

Clear statistics

The command issued will clear all statistical information.

Remote Shutdown

After enabling REMOTE CTRL, sending this command will put the inverter into standby mode. After disabling this function, the inverter will return to normal operation.

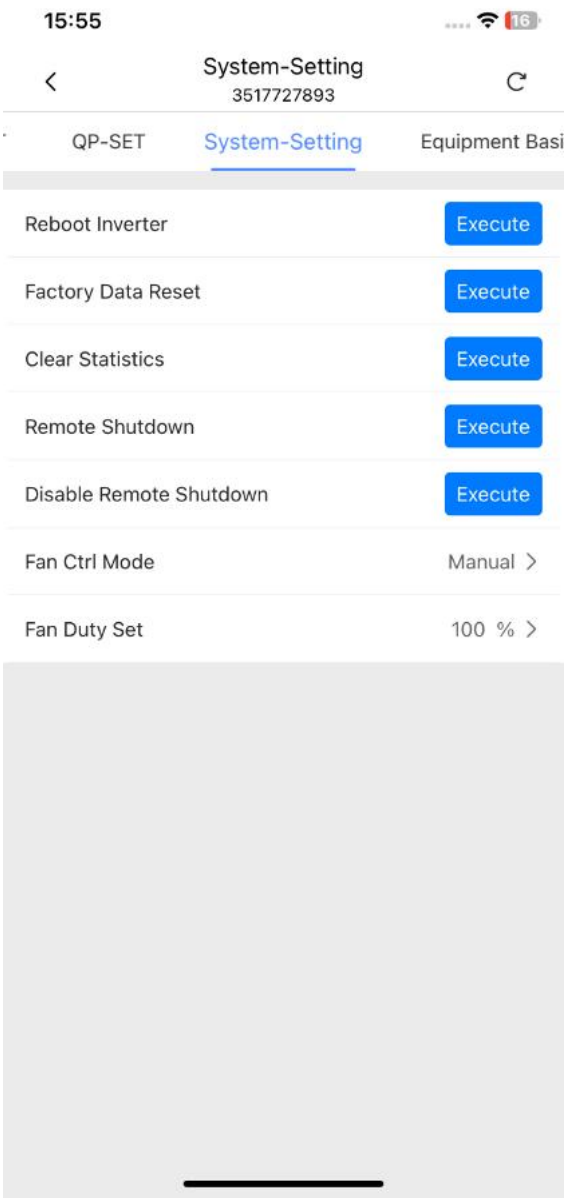

6.2.8 Equipment Basic Information

- **FIRMWARE**: The version of the firmware in ARM and DSP.
- **MODEL SN**: The serial number of the hybrid inverter in use.
- **INV MODEL**: The model of the hybrid inverter in use.
- **Bat Name:** The serial number of the battery in use.
- **System Time**: setting the date, time, and day of the week for the system.

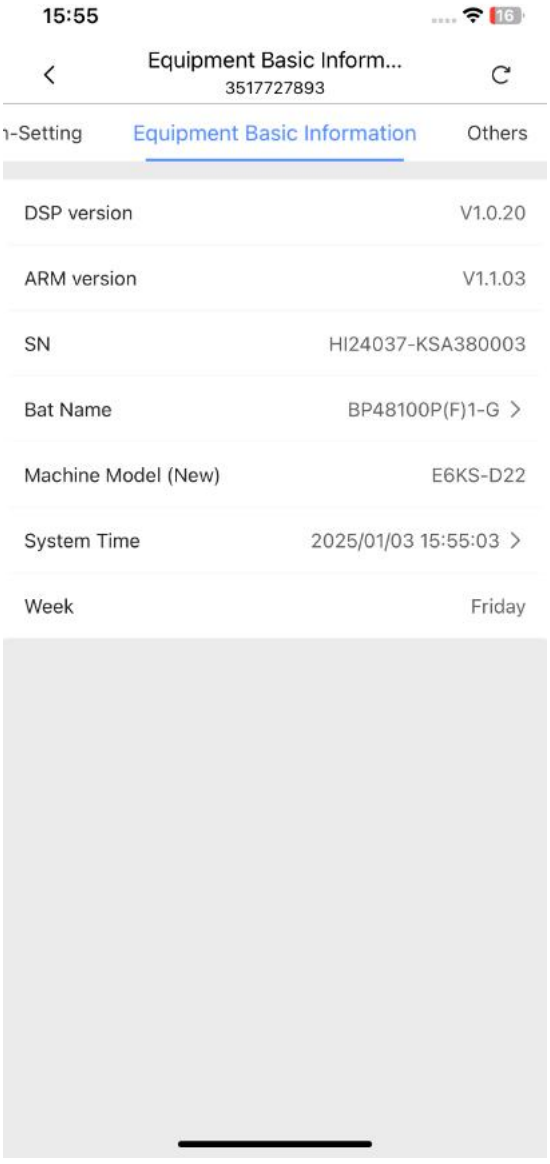

6.2.9 Electricity Generation

In this interface, you can view the voltage, current, and power of the two photovoltaic inputs, PV1 and PV2, of the inverter.

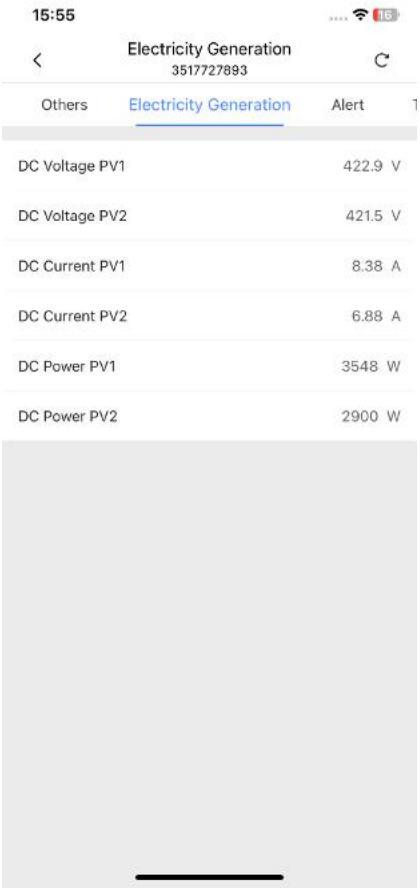

6.2.10 Alert

The fault codes of the inverter in operation can be viewed on this interface.

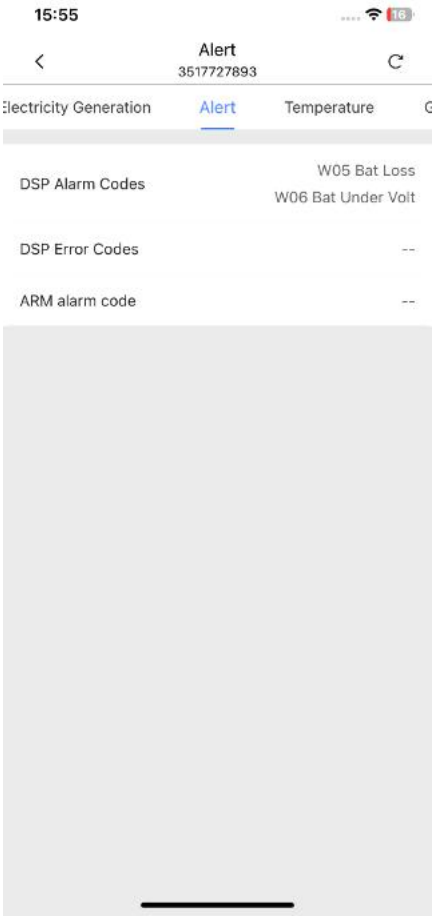

6.2.11 Temperature

In this interface, you can view the real-time temperature status of the four internal points of the inverter.

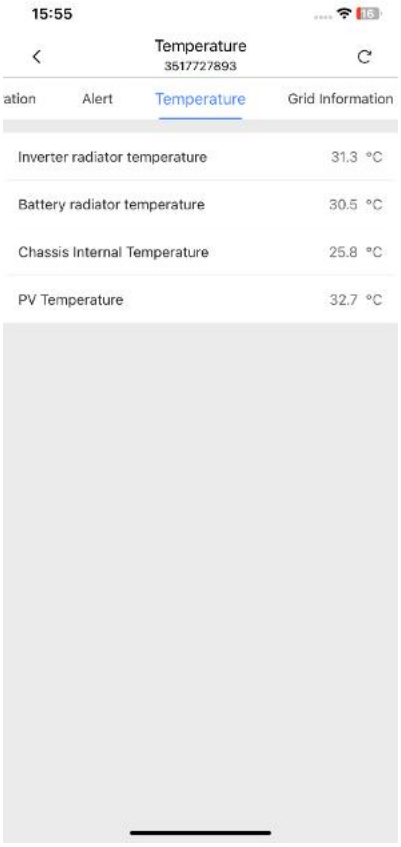

6.2.12 Grid Information

In this interface, you can view the inverter's grid-side voltage, current, frequency, and power status.

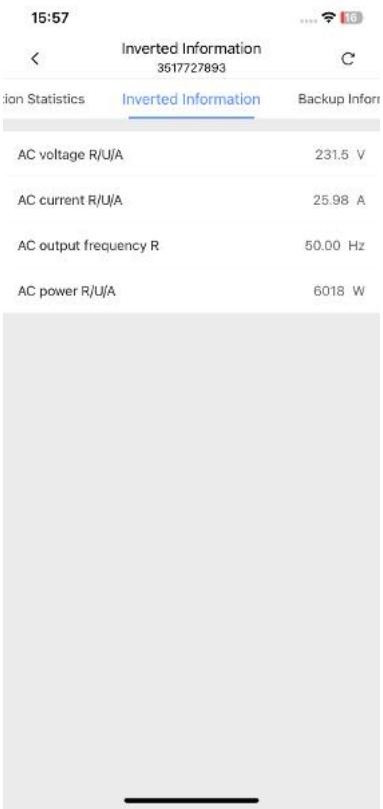

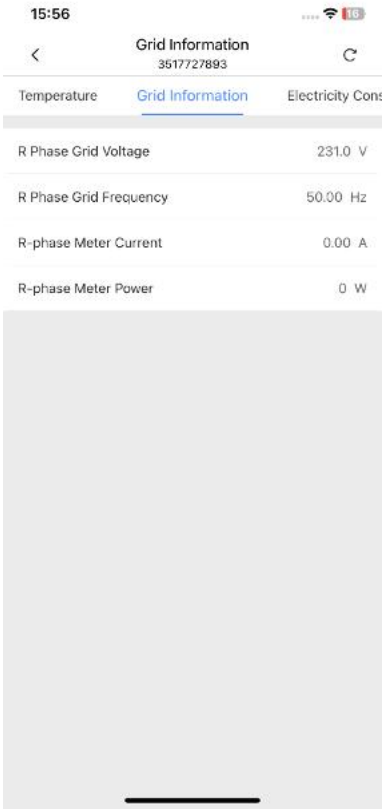

6.2.13 Electricity Consumption Statistics

- **E-TODAY, E-MONTH, E-YEAR,** and **E-TOTAL**: The electricity generation for the day, for the current calendar month, for the current calendar year, and since system installation, including the electricity generated by the PV panels, the electricity sold to the grid, the electricity purchased from the grid, and the power consumption of the loads.



6.2.14 EPS Information

The inverter's load-side voltage, current, frequency, and power status can be viewed on this interface.

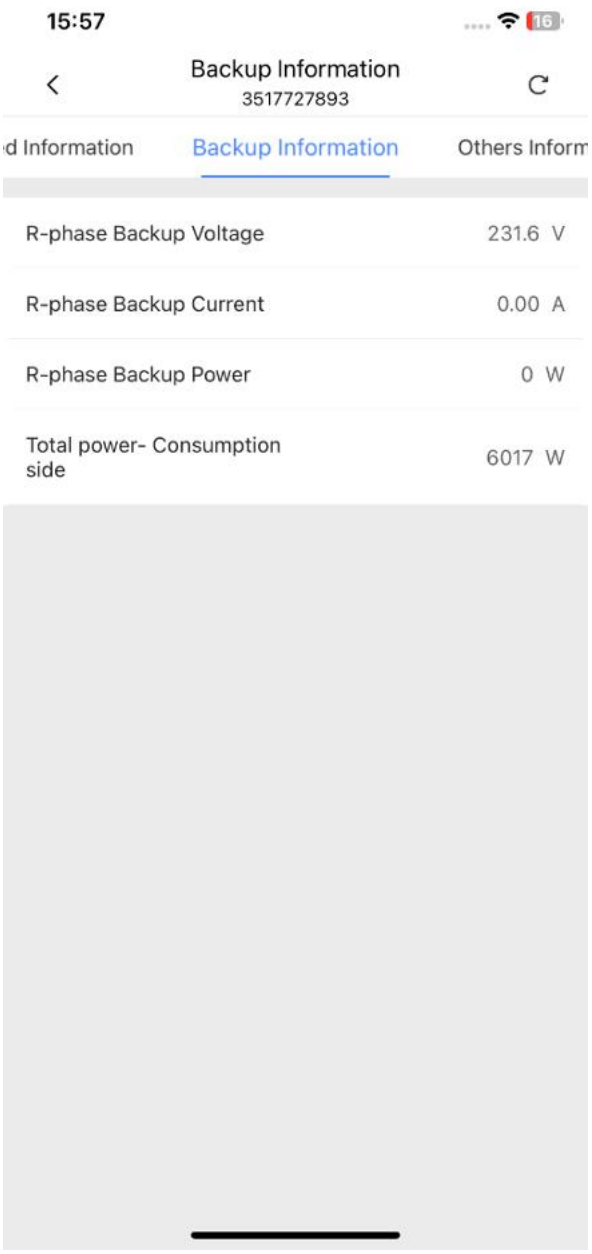

6.2.15 Others Information

- **CONNE. TIMES**: Number of inverter connections to the grid.
- **PV Input Mode**: Display PV input mode, independent or parallel mode.
- **Remote Shutdown Status:** Normal or off state
- City electricity standard: The grid standards set by the inverter.
- Speed of the fan: Display fan speed
- System Application Scenaria The system application scenarios of inverters.
- System Status: System status
- Inverter Status: Inverter Status.
- DC-DC Status: The working status of the battery side.
- BUS Voltage: The real-time value of the busbar voltage.
- DC-BUS Voltage: The real-time value of the DC bus voltage.

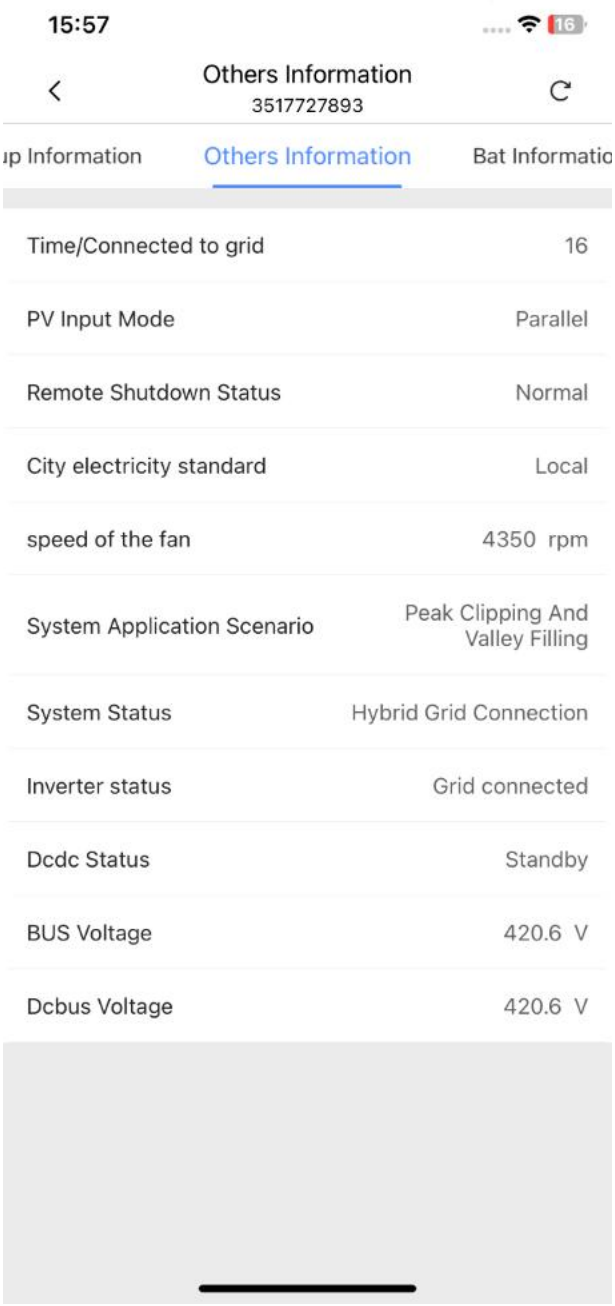

6.2.16 POWER FLOW

Click to enter the "POWERFLOW" interface for a more intuitive understanding of the inverter's current operating status.

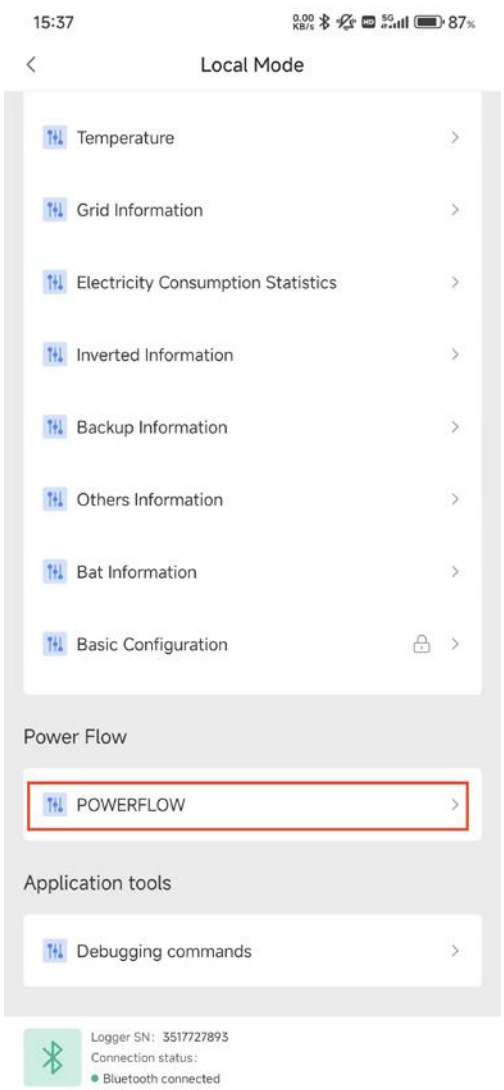

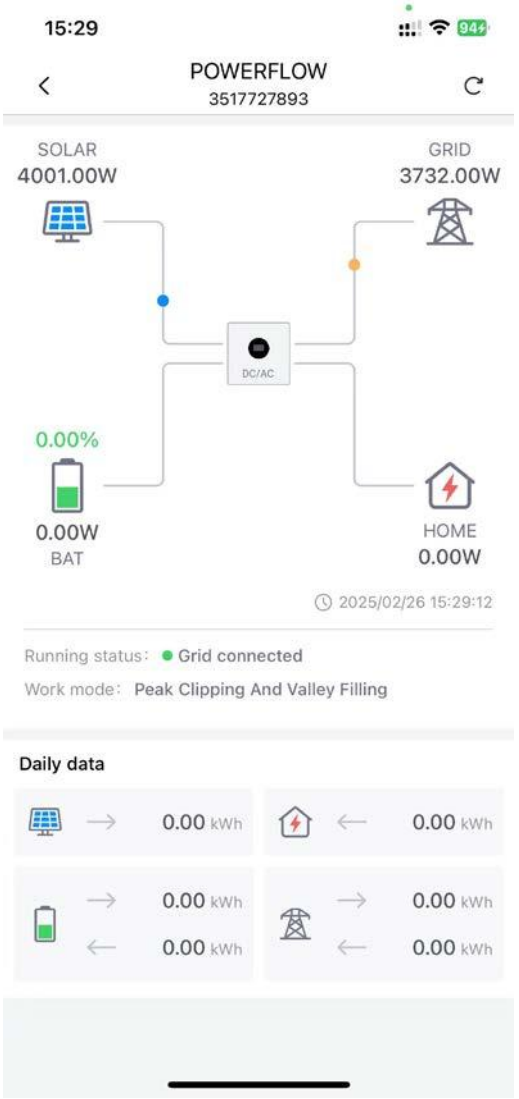

6.2.17 Device Self-Test

In Italy, when an E3.68KS-D22/ E5KS-D22/ E6KS-D22 energy storage system is installed, it must pass the Device Self-Test in the specified operate mode before being connected to the local grid. The specific operation steps are as follows:

①. Click on device self-test in the application interface.

②. Click the "Add Device" button to enter the "Select Device" page.

③. Enter the SN number of the device(Only display equipment that has been added to the power station）.

④. After selecting the device, click on start self-test.

⑤. Equipment self-test requires waiting for 10 minutes.

⑥. After the self-inspection is completed, click on the self-inspection record to enter the details.

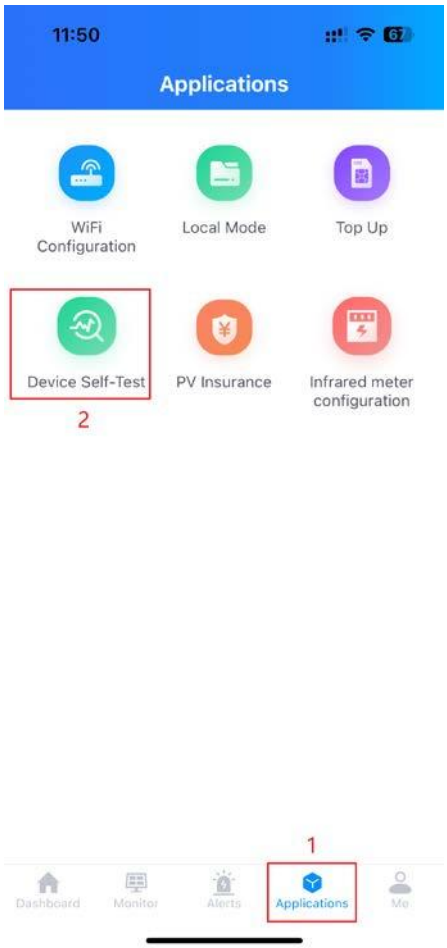
11:50
Applications
WiFi Configuration
Local Mode
Top Up
Device Self-Test
PV Insurance
Infrared meter configuration
2
1
Dashboard
Monitor
Alerts
Applications
Me


11:51
Device Self-Test
Initiate self-test
Self-Test record
+ Adding devices
Start checking Self-Test

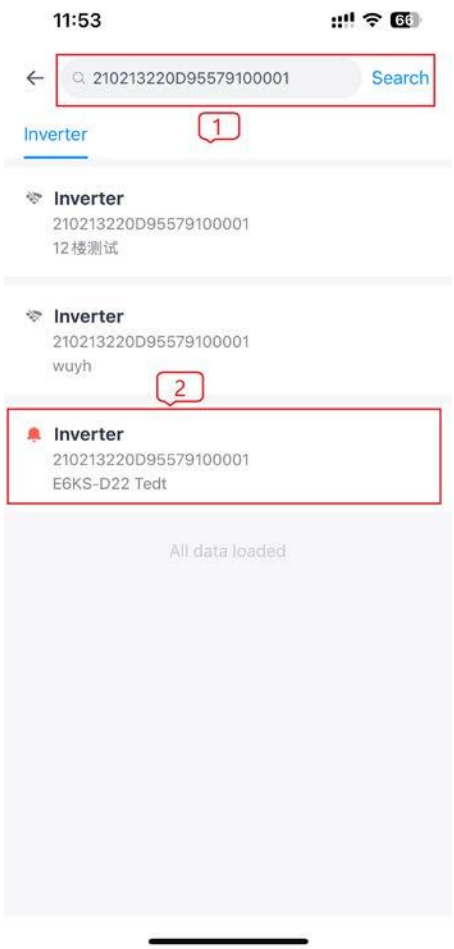
11:53
210213220D95579100001
Search
Inverter
1
Inverter
210213220D95579100001
12楼测试
Inverter
210213220D95579100001
wuyh
2
Inverter
210213220D95579100001
E6KS-D22 Tedt
All data loaded

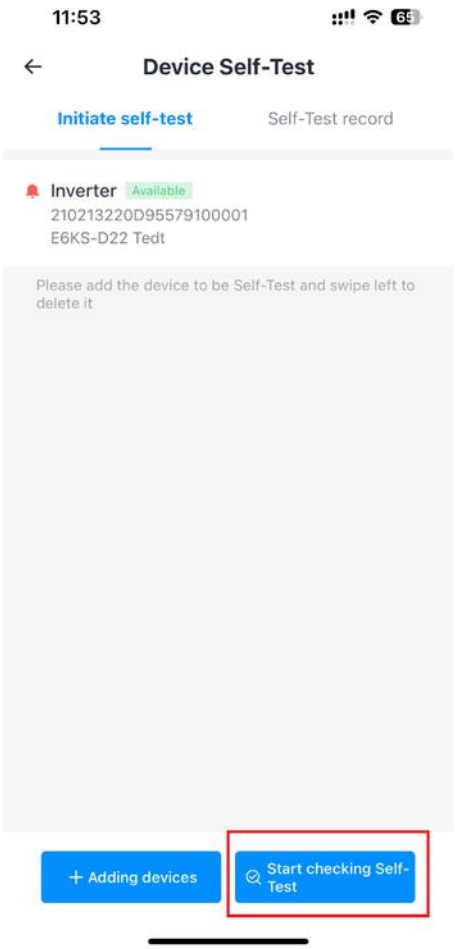
11:53
Device Self-Test
Initiate self-test
Self-Test record
Inverter
Available
210213220D95579100001
E6KS-D22 Tedt
Please add the device to be Self-Test and swipe left to delete it
+ Adding devices
Start checking Self-Test

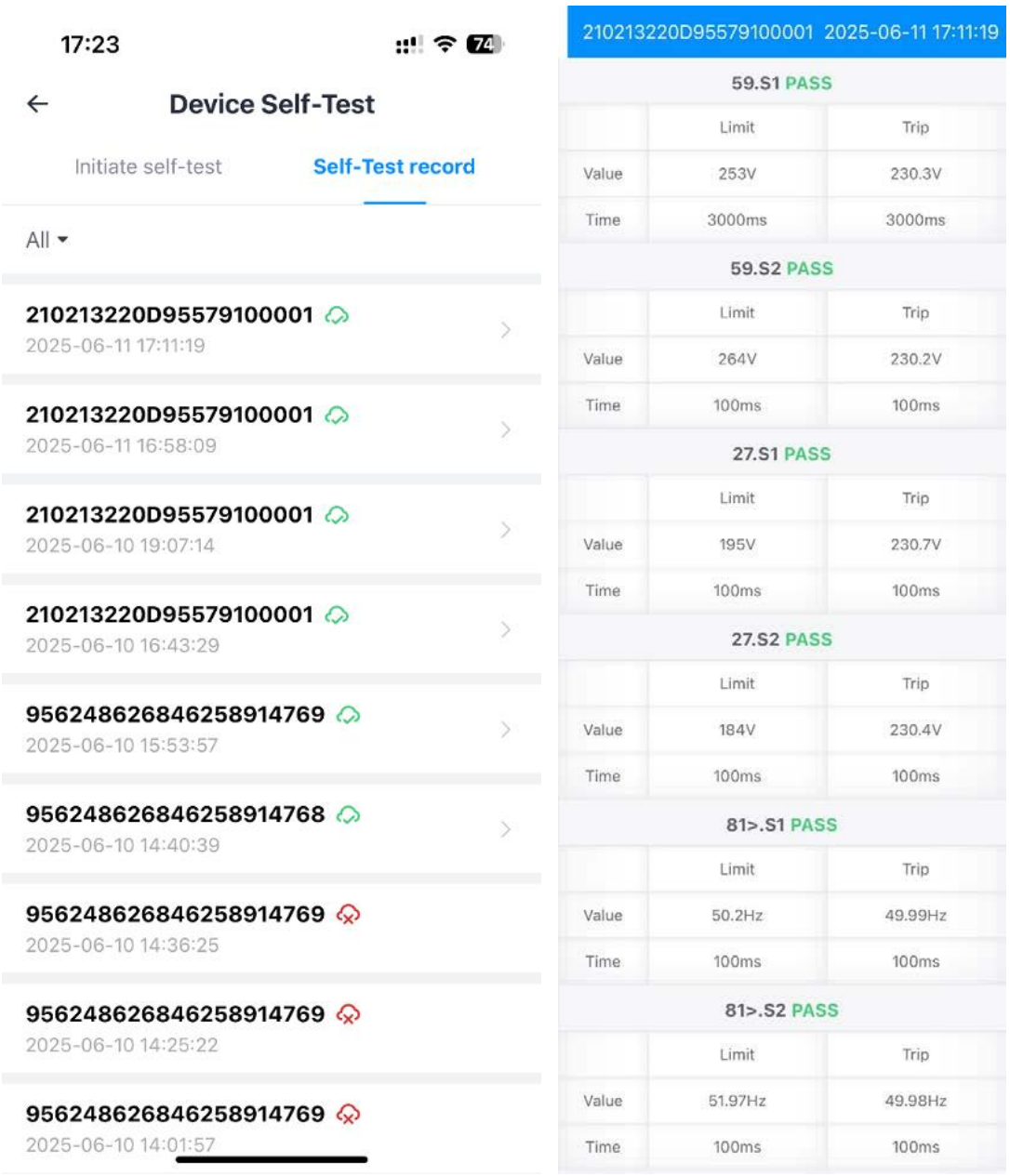

6.3 Operating Battery Packs

6.3.1 Indicator Lights and State

A battery pack can be in five states: **OFF**, **NORMAL**, **ALARM**, **PROTECTION**, and **FAULT**. In each state, the battery pack can operate in different modes.

There is an indicator light whose color is variable on the power button.

Product status	**LED indicator status**			
	LED color	**LED blink status**		
		Blink Mode	**Blinking (Sec)**	**Off (Sec)**
OFF	OFF	OFF all the time		
Normal	Green	ON all the time		
Alarm	Red	Blinks once every 1.5 seconds	0.75	0.75
Protection	Red	Blinks once every 0.5 seconds	0.25	0.25
Fault	Red	ON all the time		

6.3.2 Turning on a Battery Pack

Press the power button(1~3s) until the indicator light of the power button are on.

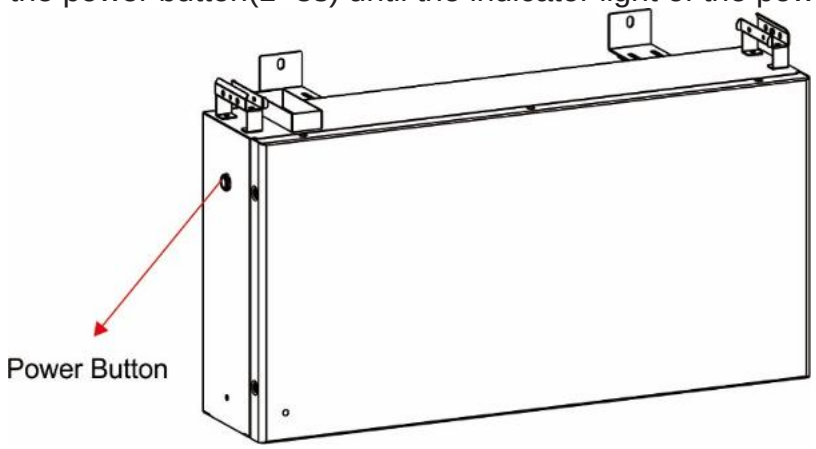

6.3.3 Turning off a Battery Pack

Press the power buttons (1~3s) until the indicator light of the power button goes out.

⚠	**Precaution:** Please make sure that the battery is not being charged or discharged before performing a shutdown.

7 Maintenance

Both users and certified professional personnel must maintain the E3.68KS-D22/E5KS-D22 energy storage system to ensure the healthy and safe operation of the system.

In this section, you can find the following:

- The inspection checklist for users of the energy storage system.
- The inspection checklist for professional personnel.
- Error codes, alarm codes, and the possible solutions of the system and the BMS.

7.1 Inspection Checklist for Users

Inspection Activity	Interval
Check for visible damage to any part of the system.	Six months
Check the inverter and battery packs for signs of wear and tear, heat damage, discoloration, and unusual smells.	Six months
Check the warning signs and guidance signs on the inverter and the battery pack for signs of wear and damage, and make sure none have been removed or obscured.	Six months
Check whether any part of the system makes an abnormal noise when the system is running.	Six months
Monitor the temperature of the battery pack and clean the battery pack if necessary.	Six months to a year
Make sure that the ground around the system is clean and tidy.	Six months to a year
Check the maintenance access to make sure that it is clear and unobstructed.	Six months to a year
When the system is running, check the voltage, temperature, and other parameters of the battery packs.	Six months
When the system is running, check the parameters of the inverters.	Six months
Check the battery packs for ineffectiveness or damage.	Six months

7.2 Inspection Checklist for Professional Personnel

⚠ WARNING

- The equipment must be opened only by professional personnel that have been certified by KSTAR New Energy.
- During inspection and maintenance, wear protective personal equipment, including insulated gloves, protective shoes, and anti-noise earplugs.
- Follow local and international safety standards, regulations, and specifications to do the maintenance.
- Contact KSTAR New Energy promptly if you encounter anything not covered in this manual.

⚠ CAUTION

Before maintenance, disconnect all the electrical connections. Wait at least five minutes after disconnection, so that the residual voltage of the capacitors falls to a safe voltage. Use a multi-meter to make sure that the equipment is completely discharged.

Inspection Activities	Interval
Check electrical connections for looseness.	Six months to a year
Check cables for deterioration or damage.	Six months to a year
Check cable terminal screws for looseness.	Six months to a year
Check cable terminals for signs of overheating.	Six months to a year
Check the ground connection.	Six months to a year
Check whether the cable tie is attached to the cable.	Six months to a year
Check the EMS, SOLARMAN app, and other related equipment for failure or damage.	Six months to a year

7.3 Troubleshooting

When you see the red alarm light on the inverter, you can find possible solutions in this section. If the problem persists after trying these solutions, please contact KSTAR New Energy or an authorized distributor.

When a problem is successfully solved, after a period of time, the red LED alarm light turns off., but you can always view it in the error records. For more information, see Viewing INQUIRE.

7.3.1 Error Codes of the System

Code	Description	Possible Solutions
F00	Soft Time Out: Soft-start timeout.	Restart the inverter and wait until it runs correctly. If the code is still shown, contact Customer Service.
F01	INV Volt Short: The inverter output is shorted.	1. Disconnect all power sources and shut down the inverters and the battery packs. 2. Disconnect the load. 3. Power on and restart all the inverters and the battery packs. 4. If no error is reported, it means the load is shorted. Check the load. If the code is still shown, contact Customer Service.
F02	GFCI Sensor Fault: A failure occurs to the Ground Fault Circuit Interrupter (GFCI) sensor.	1. Disconnect all power sources. 2. Restart the inverter and wait until it runs correctly. If the code is still shown, contact Customer Service.
F04	Bus Volt Low: The bus voltage is low.	1. Check the settings of the input mode. 2. Restart the inverter and wait until it runs correctly. If the code is still shown, contact Customer Service.
F05	Bus Volt High: The bus voltage is high.	
F06	Bus Short Circuit: The bus is shorted.	Restart the inverter and wait until it runs correctly. If the code is still shown, contact Customer Service.
F07	PV ISO Under Fault: The insulation resistance of a PV panel is low.	1. Check the ground connection. 2. Check the ground resistance of PV+ and PV-: ▪ If the resistance is smaller than 2 MΩ, check the PV string for ground fault or poor ground insulation. If necessary, contact Customer Service. ▪ If the resistance is greater than 2 MΩ and the error code is still shown, contact Customer Service.

Code	Description	Possible Solutions
F08	PV Input Short Circuit: The PV input is shorted.	1. Check the settings of the input mode. 2. Disconnect the PV input. 3. Restart the inverter and wait until it runs correctly. If the code is still shown, contact Customer Service.
F09	Bypass Relay Fault: A failure occurred to the bypass relay.	1. Disconnect the PV input. 2. Restart the inverter and wait until it runs correctly. If the code is still shown, contact Customer Service.
F19	EPS Relay Fault: A failure occurred to the EPS relay.	
F10	INV Curr Over: The output current on the inverter exceeds the threshold.	1. Wait five minutes for the inverter to restart automatically. 2. Check the EPS loads. If the load exceeds the rated output power of the inverter, disconnect some load. If the code is still shown, contact Customer Service.
F11	INV DC Over: The DC component of the output current of the inverter is too high.	Restart the inverter and wait until it runs correctly. If the code is still shown, contact Customer Service.
F12	Ambient Over Temp: The ambient temperature is too high.	1. Restart the inverter. 2. Let the inverter cool for a few minutes and then restart it. 3. Observe whether the inverter can run correctly. 4. Make sure that the ambient temperature is in the range of -25°C to 60°C. If the code is still shown, contact Customer Service.
F13	Sink Over Temp: The temperature of the heat sink is too high.	
F15	DisChg Curr Over: The battery is discharged with over current.	1. Wait five minutes for the inverter to restart automatically. 2. Check the EPS loads. If the load exceeds the rated output power of the inverter, disconnect some load. If the code is still shown, contact Customer Service.

Code	Description	Possible Solutions
F16	Chg Curr Over: The battery is charging with over current.	Check the battery wiring port for short circuits. Restart the inverter and the battery packs. If the code is still shown, contact Customer Service.
F17	Current Sensor Fault: A failure occurred to the current sensor.	Restart the inverter and wait until it runs correctly. If the code is still shown, contact Customer Service.
F18	INV Abnormal: Abnormal output voltage or output frequency of the inverter.	Contact Customer Service.
F20	Always Over Load: The EPS load always exceeds the rated output power of the system.	Check the EPS loads. If the load is lower than the rated output power of the inverter and the error is still shown, contact Customer Service.
F22	Parallel Communicate Fault: A failure occurred to the communication between the inverters in a parallel system.	1. Check the parallel cable for connection. 2. Check the inverter address settings. In a parallel system, the address of the primary inverter must be set to 1, and the addresses of the other inverters must be set to 2, 3, or 4. If the code is still shown, contact Customer Service.
F23	Parallel Grid Abnormal: In a parallel system, some connections are incorrect.	1. Check the wiring at the grid end and make sure the wiring is correct. 2. Restart the inverter and wait until it runs correctly. If the code is still shown, contact Customer Service.
F24	EPS Air Switch Abnormal: An error occurred to activation of the air switch on the EPS load end.	1. Turn off all the switches on the EPS load end. 2. If the code is still shown, contact Customer Service.
F25	Parallel Power Imbalance: Power imbalance occurs to the parallel system.	1. Turn off all the switches on the EPS load end. 2. Restart the inverter and wait until it runs correctly.

Code	Description	Possible Solutions
F26	Parallel Inverter Grid Phase Sequence Abnormal	1. Make sure that the phase sequence at the grid end of the inverter is consistent. 2. If the code is still shown, contact Customer Service.
F32	DSP ARM SCI Fault: A failure occurs to the communication between DSP and ARM.	Restart the inverter and wait until it runs correctly. If the code is still shown, contact Customer Service.

7.3.2 Alarm Codes of the System

Code	Description	Possible Solutions
W00	Grid Volt Low	Check the local voltage and frequency for their compliance with the inverter specifications: • If the voltage and frequency are within the acceptable range, wait two minutes for the inverter to run correctly. If recovery is not possible or the fault repeats, contact Customer Service. • If the voltage and frequency are beyond the range or are unstable, contact the local power company.
W01	Grid Volt High	
W02	Grid Frequency Low	
W03	Grid Frequency High	
W04	Solar Loss: No PV solar panels are connected to the system, or the input voltage from the PV solar panels is too low.	1. Check the PV connection. 2. Check the PV availability. If the connections are correct and the alarm code is still shown, contact Customer Service.
W05	Bat Loss: No battery packs are connected to the system, or the battery voltage is too low.	1. Check the battery connection. 2. Check the battery wiring port for short circuits. If the connections are correct and the alarm code is still shown, contact Customer Service.
W06	Bat Under Volt: Under voltage has occurred in the battery.	Check the battery packs for their availability. If the battery voltage is lower than the lowest battery terminal input voltage acceptable to the inverter, charge the battery until it reaches the acceptable battery input voltage of the inverter. If the code is still shown, contact Customer Service.
W07	Bat Volt Low: The battery voltage is too low.	

Code	Description	Possible Solutions
W08	Bat Volt High: The battery voltage is higher than 57.5 V and the battery has shut down because of the high voltage.	1. Check the battery for its compliance with its pre-settings. 2. If the battery complies with the pre-setting, restart it. If the code is still shown, contact Customer Service.
W09	Over Load: An overload has occurred because the connected load exceeds the rated power of the inverter.	1. Wait five minute for the inverter to restart. 2. If the EPS loads are higher than the rated output power of the inverter, disconnect some load.
W10	GFCI Over: High current leakage has occurred.	1. Check the PV string for direct or indirect grounding. If such grounding is discovered, correct it. 2. Check the peripherals of the inverter for current leakage. If current leakage is discovered, address it. If the code is still shown, contact Customer Service.
W12	Fan Fault: The fan has malfunctioned.	Restart the inverter and wait until it runs correctly. If the code is still shown, contact Customer Service.
W13	BAT Power Down: The battery has shut down because the SOC is low.	Check the SOC. Make sure that the SOC is not lower than the difference between 100% and the set DOD. If it is lower than the difference, charge the battery.
W14 **W15** **W16** **W17** **W18** **W21** **W22**	BMS alarms.	For more information, see BMS ALARM Warnings.
W19	BMS Volt Imbalance: A voltage imbalance has occurred to the battery of the BMS.	Contact Customer Service.
W20	BMS Communicate Fault: The communication between the BMS and the inverter has failed.	Make sure that the COM cable between the inverter and the battery pack is in good condition and is connected correctly.
W23 **W24**	BMS protection warning.	For more information, see BMS PROTECTION Warnings.

Code	Description	Possible Solutions
W25	BMS Updating: The BMS is updating.	You can ignore this alarm. No action is required.
W26	BMS Program Version Err: The version of the BMS program is incorrect.	Contact Customer Service.
W27	BMS Program Update Fail: The BMS program has failed to update.	Check the network and try to update the program again.
W29	Grid Volt Lock Fail: The inverter has failed to synchronize with the grid.	Restart the inverter and wait until it runs correctly. If the code is still shown, contact Customer Service.
W30	PV Off: The PV string has requested a shutdown.	Restart the inverter and wait until it runs correctly. If the code is still shown, contact Customer Service.
W31	System Reset: The system is reset.	Restart the inverter and wait until it runs correctly. If the code is still shown, contact Customer Service.

7.3.3 BMS Error codes and troubleshooting

Code	Description	Possible Solutions
BIT0	Battery cell overvoltage alarm	The warning unit overcharging voltage is 3650mV, where the inverter should stop charging and the BMS should not turn off the charging MOS.
BIT1	Battery cell under-voltage alarm	The warning unit over discharging voltage is 2800mV, where the inverter should stop discharging and the BMS should not turn off the discharging MOS.
BIT2	Battery PACK overvoltage alarm	The warning overall overcharging voltage is 57.6V, where the inverter should stop charging and the BMS should not turn off the charging MOS.
BIT3	Battery PACK under-voltage alarm	The warning overall over discharging voltage is 44.8V, where the inverter should stop discharging and the BMS should not turn off the discharging MOS.
BIT4	Charging overcurrent alarm	The warning charging overcurrent is 100A, where the inverter should stop charging and the BMS should not turn off the charging MOS.
BIT5	Discharging the overcurrent alarm	The warning current of discharging overcurrent 1 is 100A where the inverter should stop discharging and the BMS

		should not turn off the discharging MOS. This alarm will automatically stop after 1min or when the charging current is greater than 1A.
BIT8	Charging high temperature alarm (cell temperature)	The protective limit of charging high temperature is 57℃ where the BMS should forcibly turn off the charging MOS.
BIT9	Discharging high temperature alarm (cell temperature)	The warning discharging high temperature is 55℃, where the inverter should stop discharging and the BMS should not turn off the discharging MOS.
BIT10	Charging low temperature alarm (cell temperature)	The warning charging low temperature is 2℃, where the inverter should stop charging and the BMS should not turn off the charging MOS.
BIT11	Discharging low temperature alarm (cell temperature)	The warning discharging low temperature is -18℃, where the inverter should stop discharging and the BMS should not turn off the discharging MOS.
BIT12	High ambient temperature alarm	The warning high ambient temperature is 65℃, where the inverter should stop charging and discharging and the BMS should forcibly turn off the charging and discharging MOS.
BIT13	Low ambient temperature alarm	The warning low ambient temperature is -15℃, where the inverter should stop charging and the BMS should forcibly turn off the charging MOS.
BIT14	MOSFET high temperature alarm	The warning MOS over-temperature is 90℃, where the inverter should stop charging and discharging and the BMS should not turn off the charging and discharging MOS.
BIT15	Low SOC alarm	The warning low battery SOC is less than 5%, where the inverter should stop discharging and the BMS should not turn off the charging and discharging MOS and should not alarm during charging.

7.3.4 BMS Protection codes and description

Code	Description	Possible Solutions
BIT0	Battery cell overvoltage protection	The unit overcharging protection voltage is 3700mV, where the inverter should stop charging and the BMS should forcibly turn off the charging MOS.
BIT1	Battery cell under-voltage protection	The unit over discharge protection voltage is 2500mV, where the inverter should stop discharging and the BMS should forcibly turn off the discharging MOS. After 30 seconds of over discharge protection, if the battery still cannot be restored, it will enter a low power consumption mode.
BIT2	Battery PACK overvoltage protection	The overall overcharge protection voltage is 59V, where the inverter should stop charging and the BMS should turn off the charging MOS.
BIT3	Battery PACK under-voltage protection	The overall over discharge protection voltage is 40V, where the inverter should stop discharging and the BMS should forcibly turn off the discharging MOS. After 30 seconds of over discharge protection, if the battery still cannot be restored, it will enter a low power consumption mode.
BIT4	Charging overcurrent protection	The protective limit of charging overcurrent is 120A, where the BMS should forcibly turn off the charging MOS. This state will be locked and not be exited automatically if it occurs continuously for 10 times.
BIT5	Discharging overcurrent protection	The protective limit of discharging overcurrent 1 is 130A and the protective limit of discharging overcurrent 2 is 200A with a delay of 100ms, where the BMS should forcibly turn off the discharging MOS. This state will be locked and not be exited automatically if it occurs continuously for 10 times.
BIT6	Short circuit current protection	The short circuit protection current is no less than 350A with a delay of 300us, where the BMS should forcibly turn off the discharging MOS.
BIT7	Charging overvoltage protection	The overall overcharge protection voltage is 59V, where the inverter should stop charging and the BMS should turn off the charging MOS.

BIT8	Charging high temperature protection (cell temperature)	The protective limit of charging high temperature is 57℃, where the BMS should forcibly turn off the charging MOS.
BIT9	Discharging high temperature protection (cell temperature)	The protective limit of discharging high temperature is 57℃, where the BMS should forcibly turn off the discharging MOS.
BIT10	Charging low temperature protection (cell temperature)	The protective limit of charging low temperature is 0℃, where the BMS should forcibly turn off the charging MOS.
BIT11	Discharging low temperature protection (cell temperature)	The protective limit of discharging low temperature is -20℃, where the BMS should forcibly turn off the discharging MOS.
BIT12	MOSFET high temperature protection	The protective limit of MOS over-temperature is 110℃, where the BMS should forcibly turn off the charging and discharging MOS.
BIT13	High ambient temperature protection	The protective limit of high ambient temperature is 70℃, where the BMS should forcibly turn off the charging and discharging MOS.
BIT14	Low ambient temperature protection	The protective limit of low ambient temperature is -25℃, where the BMS should forcibly turn off the charging and discharging MOS.
BIT15	Heating function fault	Reset the battery PACK; If the fault is not clear, contact the service engineer.

7.3.5 BMS Fault codes and description

Code	Description	Possible Solutions
BIT0	Charging MOSFET malfunction	Restart the battery PACK, if the fault still exists, contact the manufacturer and lock it until the technical personnel resolve the problem.
BIT1	Discharging MOSFET malfunction	Restart the battery PACK, if the fault still exists, contact the manufacturer and lock it until the technical personnel resolve the problem.
BIT2	Temperature sensor malfunction	Restart the battery PACK, if the fault still exists, contact the manufacturer and lock it until the technical personnel resolve the problem.
BIT3	Cell voltage sampling	Reset the battery PACK; If the fault is

	fault	not clear, contact the service engineer.
BIT4	Battery cell malfunction	Restart the battery PACK, if the fault still exists, contact the manufacturer and lock it until the technical personnel resolve the problem.
BIT5	Front-end sampling communication failure	Restart the battery PACK, if the fault still exists, contact the manufacturer and lock it until the technical personnel resolve the problem.
BIT6	Heating control MOSFET fault	Reset the battery PACK; If the fault is not clear, contact the service engineer.
BIT14	Reverse DC connection	Check whether or not the wiring between the battery PACK and the positive and negative wires of the inverter battery is proper.

8 Storing and Recharging Batteries

8.1 Storage Environment Requirements

It is recommended that you begin using the battery soon after delivery rather than store the battery pack for a long time. The maximum storage life of a battery pack is three years.

The intended storage environment of the battery pack should meet these requirements:

- Ambient temperature: 0°C to 35°C.
- Recommended storage temperature: 20°C to 30°C.
- Relative humidity: 0–95% (No condensation).
- Dry, ventilated, and clean area.
- No contact with corrosive organic solvents, gases, and other substances.
- No direct sunlight.
- More than two meters from any heat source.

⚠ WARNING

When storing a battery in its packaging, make sure that the packaging box is intact and that the battery is appropriately placed and stacked, and the above mentioned requirements are met.

8.2 Interval for Recharging Batteries

While in storage, batteries must be recharged at specified intervals.

Table 8-1 Recharge Batteries at Specified Intervals during Storage

Actual Storage Temperature	Interval
-10°C ≤ T ≤ 30°C	12 months
30°C< T ≤ 45°C	8 months

Battery packs must be recharged a maximum of three times within a 3-year period. For example, whether the battery is recharged every 8 months or every 12 months, it can only be recharged a maximum of three times within three years. If the battery has not been recharged within three years, or if it has been recharged more than three times within three years, it is recommended that the battery pack be discarded.

Lithium-ion batteries lose capacity during storage. After 12 months of storage at the intended storage temperature, the capacity generally falls irreversibly by 3–10%. Batteries with less than 100% capacity after storage cannot pass the discharge testing and acceptance testing.

8.3 Recharging a Battery

If a battery has not been charged for two weeks or more after a deep discharge, or the SOC of a battery is less than 50% after a long period of storage, the battery must be charged to 50%.

⚠ WARNING

Before charging the battery, check it for deformation, case damage, or leakage, and if you find any of these things, do not charge the battery.

NOTE

If the SOC of a battery pack is not less than 50% after more than 12 months of storage, it is not necessary to recharge the battery.

NOTES

Prepare a cross screwdriver and insulated rubber gloves.

⚠ CAUTION

When you connect the power wires, wear insulated rubber gloves.

PROCEDURE

Step 1. Connect power cables to the battery charger correctly. The maximum number of battery pack connected parallel is 4.

Step 2. Press the battery “start key” for 1~3 seconds to start the battery pack. Check the LED on the battery “start key” is on.

Step 3. Turn on the battery charger.

Step 4. Set charging parameter on the battery charger.

Case #1, One battery pack is charged. Set the charge limited voltage 57.6V; Set the charge limited current 50A;

Case #2, Two ~ Four battery packs are charged. Set the charge limited voltage 57.6V; Set the charge limited current 100A;

Step 5. After the battery is charged, switch off the battery charger and press the battery “start key” for 1~3 seconds to switch off the battery pack.

9 Limited Warranty

If the equipment fails during the warranty period, KSTAR New Energy and its authorized partners will provide free service or replace the unit or part with a new one.

9.1 What This Warranty Covers

During the warranty service, the professional personnel certified by KSTAR New Energy or its authorized partners will determine the problem based on the current status of the equipment, confirm the time required for repair or replacement, and complete the repair or replacement within the agreed time.

If a unit or part is replaced, the replaced unit or parts will be recycled and disposed of by KSTAR New Energy or its authorized partners.

The replacement unit or parts provided by KSTAR New Energy are determined by the inventory and may not be brand new, but are bound to be in good working condition and at least functionally equivalent to a brand new unit or part. The replacement unit or part will be warranted for the remainder of the original warranty period of the equipment.

9.2 How to Obtain Warranty Service

If the equipment does not function as warranted during the warranty period, you can contact KSTAR New Energy or its authorized partners to obtain warranty service.

9.3 Customer Responsibility for Warranty Service

To obtain warranty service, you must take these steps:

Step 1. Provide the purchase invoice to prove that the whole unit or parts are still under warranty.

Step 2. Make sure that the nameplate on the equipment is intact and legible.

Step 3. Make sure that the installation, modification, replacement, or removal of the whole unit or part of the equipment has been done by professional personnel certified by KSTAR New Energy or its authorized partners.

Step 4. Make sure that the equipment has been operated in the intended environment described in this manual or other documents provided by KSTAR New Energy.

Step 5. Make sure that no non-standard parts or parts not supplied by KSTAR New Energy are used in the equipment.

Failure to comply with any of the above information, KSTAR New Energy or its authorized partners have the right to refuse to provide warranty service.

9.4 Limitation of Liability

KSTAR New Energy has the right to refuse to honor the quality warranty for any of the following reasons:

- Damage during transportation, including paint scratches caused by friction inside the package during transportation, and damage sustained while being transported by you or a third party commissioned by you.
- Operation of the equipment in an environment other than the intended environment described in this manual or other documents provided by KSTAR New Energy.
- Failure or damage caused by installation, repair, modification, or disassembly carried out by anyone other than professional personnel certified by KSTAR New Energy or its authorized partners.
- Failure or damage caused by the use of non-standard components or other components not provided by KSTAR New Energy.

KSTAR New Energy may charge a fee for repair service if you request repair of the equipment in any of the following circumstances:

- Installation and use beyond the scope of the relevant standards.
- Damage caused by unexpected natural factors.

10 Emergency Procedure

An emergency is a situation involving a major incident or the possibility of a major incident that cannot be handled according to normal procedures and requires immediate action to limit or address the consequences.

This section describes emergencies that may be encountered when you are using the E3.68KS-D22/E5KS-D22/E6KS-D22 energy storage system and how to handle such emergencies.

10.1 General Handling

If an emergency occurs, remember the following:

- The grid main switch that supplies power directly to the BESS must be turned off.
- All load switches in the BESS must be turned off.
- The battery switch must be turned off.
- If you want to open the inverter or the battery pack after the power is turned off, to prevent possible fatal personal injury, use a properly calibrated voltage meter to measure the voltage at the input terminals, wait approximately 15 minutes until the DC link capacitors inside the battery pack is completely discharged, and then open the top cover to repair.

⚠ WARNING

Before operating the equipment, make sure that the BESS is not supplied with grid power.

10.2 Potential Emergencies

10.2.1 Battery Leakage

If the battery pack leaks electrolyte, avoid contact with the leaking liquid or gas. If you contact with the leaking substance, take the measures listed in Table 10-1 immediately.

Table 10-1 Measures to Solve Battery Leakage Emergency

Exposure	Measures
Inhalation	Evacuate contaminated area, and then seek medical attention.
Eye Contact	Flush eyes with running water for five minutes, and then seek medical attention.
Skin Contact	Wash affected area thoroughly with soap and water, and then seek medical attention.
Ingestion	Induce vomiting, and then seek medical attention.

10.2.3 Fire or Explosion

If a fire occurs in the area where the battery pack is installed, take the following measures.

⚠WARNING

Batteries can explode when heated over 150°C. Toxic gases can leak when a battery pack burns. DO NOT approach. However, because the batteries contain only a small amount of oxygen and all batteries are equipped with explosion-proof valves, battery explosions are unlikely to occur.

Table 10-2 Handling with Fire

Handling with Fire	Description
Fire Extinguishing Agent	A respirator is not usually required. If the fire is caused by a battery, use a specialized fire extinguisher such as Noves 1230, FM-200, or a dioxin extinguisher. If the fire is not caused by a battery, use a regular ABC extinguisher.
Extinguishing Instructions	If a fire occurs while charging a battery, turn off the battery pack circuit breaker and turn off the charging power if it is safe to do so. If the battery pack is not on fire, the fire should be extinguished before the battery pack catches fire. If the battery pack is on fire, do not attempt to extinguish the fire. Instead, evacuate personnel immediately.
Methods of Handling Accidents	If the battery is in a dry environment, put the damaged battery in an isolated area and call the local fire department or service engineer. If the battery is in a wet environment, DO NOT touch anything if any part of the battery, such as the inverter or cables, is submerged. DO NOT use the submerged battery. Contact a service engineer.

10.3 Emergency Handling Plan

If an emergency occurs, follow this emergency handling plan:

Step 1. Turn off the AC circuit breakers.

Step 2. Check the control power supply. If there is no problem, supply power to the inverter again to find the cause.

Step 3. Record the details related to the fault so that KSTAR New Energy can analyze and rectify the fault. DO NOT operate the equipment before the fault is rectified. Please contact KSTAR New Energy as soon as possible.

11 Disposal

When the system reaches the end of its service life, follow these steps to dispose of the equipment:

Step 1. Uninstall the system:

1.1 Disconnect all power sources.
1.2 Disassemble all parts of the system from top to bottom.

Step 2. Dispose of all the parts. DO NOT dispose of the battery packs as regular household waste.

	This symbol means that the labeled equipment must not be disposed of as regular household waste. It must be disposed of at an electrical and electronic equipment-recycling center.

N O T I C E

If you need to replace a battery pack, you should request a new dangerous goods package, pack the battery pack, and then have the supplier pick it up.

KSTAR New Energy does not recycle batteries. Please contact your local recycling organization for disposal. If there is no local recycling organization, you should contact the nearest recycling organization in your country.

12 Specifications

12.1 Hybrid Inverter

Dimension (W × H × D, mm)	725 × 390 × 245
Net Weight (kg)	25（31kg with base）
Operating Temperature	-25°C to +60°C, Derated over 45°C
Operating Relative Humidity	0–95% (No condensation)
Operating Altitude	≤ 4000 m
Protective Class	Class I
Overvoltage Category	II (DC side), III (AC side)
Topology	High Frequency Isolation
Cooling	Natural Convection
Display	LED/APP
Communication Interface	RS485, CAN2.0, Wi-Fi, and 4G
Ingress Protection	IP66
Max. Conversion Efficiency (From Battery)	94.8%
Max. Conversion Efficiency (From PV)	97.2 %
Euro Efficiency	95.9%（3.68K）/96.4%（5K）/96.5%（6K）
MPPT Efficiency	99 %
Protection Function	• Short Circuit Protection • AC Leakage Fault Protection • Grounding Fault Protection • Anti-islanding Protection • Overload Protection • Surge Protection
Grid Regulation	• EN50549-10 • VDE-AR-N4105 • VDE0126-1-1 More grid regulation certifications are to be made available. Please contact KSTAR New Energy for the latest information.
Safety Regulation	• IEC/EN 62109-1&2 • IEC62040-1 • IEC62619

EMC	• EN61000-6-1 • EN61000-6-2 • EN61000-6-3 • EN61000-6-4 • EN61000-3-2 • EN61000-3-3 • EN61000-3-11 • EN61000-3-12

12.2 Battery Terminal Input /Output

	E3.68KS-D22	E5KS-D22	E6KS-D22
Battery Type	Lithium or lead-acid batteries		
Voltage Range	42–58 VDC		
Rated Voltage	48 VDC		
Maximum Charge/ Discharge Current	80 ADC/80 ADC	120 ADC/120 ADC	125 ADC/125 ADC
Maximum Charge/ Discharge Power	3600 W/3900 W	5,000 W/5,400 W	6,000 W/6,400 W

12.3 PV Input

	E3.68KS-D22	E5KS-D22	E6KS-D22
Vmax. PV	500 VDC		
Rated Voltage	360 VDC		
PV Start Voltage	120 VDC		
MPPT Voltage Range	120–480 VDC		
MPPT Range (Full Load)	200–425 VDC	250–425 VDC	250–425 VDC
MPPT Tracker/Strings	2		
Max. Continuous PV Input Current	20 ADC × 2		
Isc PV	25 ADC × 2		
Max. Backfeed Current	0 ADC		
Max. Continuous PV Input Power	7,200 W	10,000 W	10,000 W

12.4 Grid Terminal Input / Output

	E3.68KS-D22	E5KS-D22	E6KS-D22
Rated Voltage	220/230/240 VAC		
Rated Frequency	50 Hz /60 Hz		
Maximum Continuous Input Current	32 AAC	40 AAC	40 AAC
Maximum Continuous Input Power	7,360 W	9,200 W	9,200 W
Rated Output Current	16 AAC	21.7 AAC	26.1 AAC
Maximum Continuous Output Current	16.7 AAC	22.7 AAC	27.3 AAC
Power factor (Cos phi), Adjustable	0.8 leading–0.8 lagging		
Rated Output Power	3,680 W	5,000 W	6,000 W
Maximum Continuous Output Apparent Power	3,680 VA	5,000 VA	6,000 VA
Grid Port Overcurrent Protection	63 A		

12.5 EPS Load Terminal Output

	E3.68KS-D22	E5KS-D22	E6KS-D22
Rated Voltage	230 VAC		
Rated frequency	50 Hz/60 Hz		
Rated Output Current	16 AAC	21.7 AAC	26.1 AAC
Maximum Continuous Output Current	16 AAC	21.7 AAC	26.1 AAC
Rated Continuous Output Power	3,680 W	5,000 W	6,000 W
Maximum Output Apparent Power	3,680 VA	5,000 VA	6,000 VA
EPS Load Overcurrent Protection	32 A		

12.6 Battery Pack

System Energy Capacity (kWh) =5/10/15/20			
Model of inverter	**E3.68KS-D22**	**E5KS-D22**	**E6KS-D22**
Battery	**BP48100PF1-G2/BP48100P1-G2**		
System Energy	**5.1KWH/10.2KWH/15.3KWH/20.4KWH**		
Rated battery voltage	**48V**		
Number of Battery Modules	**1/2/3/4**	**1/2/3/4**	**1/2/3/4**
Max charging current	**50A/80A/ 80A/80A**	**50A/100A/ 120A/120A**	**50A/100A/ 125A/125A**
Max discharging current	**80A/80A/ 80A/80A**	**80A/100A/ 120A/120A**	**80A/100A/ 125A/125A**
Max charging power	**3000W/3680W/ 3680W/3680W**	**3000W/5000W/ 5000W/5000W**	**3000W/6000W/ 6000W/6000W**
Max discharging power	**3680W/3680W/ 3680W/3680W**	**3900W/5000W/ 5000W/5000W**	**3900W/6000W/ 6000W/6000W**

Battery specification			**BP48100P1-G2**	**BP48100PF1-G2**
normal	**Battery capacity**		5.12 kWh	
	Battery type		LFP	
	Rated voltage		51.2V	
	Operating voltage range		44.8–57.6V	
Operations	**Maximum charging current**		50A (0.5C)	
	Maximum discharging current		80A (0.8C)	
	Operating temperature range	**Charge**	0℃~+50℃	-10℃~+50℃
		Discharge	-10℃~+50℃	
	Storage temperature range		0℃~+35℃	
	Relative humidity		0%~95%(No condensation)	
	Protective class		I	
	Short circuit ratings		360A 300us	
BMS	**Maximum number of butteries**		Maximum 4 batteries in parallel	
	Monitored item		System voltage, current, battery voltage, battery temperature, PCBA temperature measurement	
	Communication mode		CAN	

	Ventilation mode	Passive and active cooling
Physical parameters	**Weight (kg)**	50.5
	Size (W×H×D) mm	725*165*370(Excluding handles)
	Water resistance level	IP65
Reference to standards		IEC 62619 IEC 62477 IEC 62040 IEC61000-6-1//3 UN38.3

13 Abbreviations

A

AC	Alternating Current
AFCI	Arc-Fault Circuit-Interrupter
App	Application
AWG	American Wire Gauge

B

BESS	Battery Energy Storage System
BMS	Battery Management System

C

CT	Current Transformer

D

DC	Direct Current
DOD	Depth of Discharge
DRED	Demand Response Enabling Device
DRM	Demand Response Mode
DSP	Digital Signal Processor

E

EMI	Electromagnetic Interference
EMS	Energy Management System
EPS	Emergency Power Supply

G

GFCI	Ground Fault Circuit Interrupter

I

ISO	Insulation

M

MPPT	Maximum Power Point Tracker

P

PV	Photovoltaic

R

RCD	Residual Current Device
RESP	Response
RRCR	Radio Ripple Control Receiver

S

SCI	Serial Communication Interface
SOC	State of Charge

14 Appendix: Definition of DVC

Decisive voltage Classification (DVC)	Limits of working voltage V		
	a.c. voltage r.m.s. U_{ACL}	a.c. voltage peak U_{ACPL}	d.c. voltage mean U_{DCL}
A*	25 (16)	35.4 (22.6)	60 (35)
B	50 (33)	71 (46.7)	120 (70)
C	> 50 (> 33)	> 71 (> 46.7)	> 120 (> 70)
The table values in parentheses are to be used for PCE or portions of PCEs rated for installation in wet locations as addressed in 6.1 for environmental categories and minimum environmental conditions. *DVC-A circuits are allowed under fault conditions to have voltages up to the DVC- B limits, for maximum 0.2 s.			

KSTAR

Shenzhen Kstar New Energy Company Limited
Add: Kstar Industrial Park, Guangming Hi-Tech Park,
shenzhen ,P.R.CHINA
Tel:0755-21389008 **Fax:**0755-21389008
Web:www.kstar.com