SolaX Power Network Technology (Zhejiang) Co., Ltd.

Add.: No. 278, Shizhu Road, Chengnan Sub-district, Tonglu County,
Hangzhou, Zhejiang, China
E-mail: info@solaxpower.com

Copyright © SolaX Power Network Technology (Zhejiang) Co., Ltd. All rights reserved.

320101031211



X3-FORTH

40 kW-LV / 50 kW-LV / 60 kW-LV / 70 kW-LV
75 kW / 80 kW / 100 kW / 110 kW / 120 kW
125 kW / 136 kW-MV / 150 kW-MV

User Manual

Version 11.0

www.solaxpower.com

X3-FTH / X3-FTH LV
eManual in the QR code or at
http://kb.solaxpower.com/

CHANGE HISTORY

Changes between document versions are cumulative. The latest version contains all updates made in previous versions.

Version 11 (May. 07, 2024)

Added contents about PV dustproof buckles
Modified Grounding Connection

Version 10 (Mar. 05, 2024)

Modified PV terminals

Version 09 (Jan. 22, 2024)

Deleted PV Connection information and UKCA
Updated LCD description and used MC4 terminals
Updated information of packing list
Deleted PLC information

Version 08 (Jul. 18, 2023)

Added local MODBUS parallel function description
Modified Troubleshooting
Added OT terminal instructions

Version 07 (Apr. 19, 2023)

Added the data of 75kW, 100kW 12 MPPT and 110kW 12 MPPT

Version 06 (Feb. 15, 2023)

Added Change History
Updated 2.3 Explanation of Symbols (Modified the explanations of the symbols)
Updated diagram of PLC connection

Version 05 (Sep. 12, 2022)

Modified the neutral version
Added a diagram to PLC Box connection
Updated USB

Version 04 (Mar. 15, 2022)

Uadded information of the screen version

Version 03 (Nov. 26, 2021)

Modified the layout of the contents, technical data and schematic diagram

Version 02 (Nov. 26, 2021)

Added low voltage and all related contents

Version 01 (Oct. 23, 2021)

Added The communication line is changed to 30 cores

Version 00 (Sep. 25, 2021)

Initial release

CONTENTS

1 Notes on This Manual . . . 03
- 1.1 Scope of Validity . . . 03
- 1.2 Target Group . . . 03
- 1.3 Symbols Used . . . 03

2 Safety . . . 04
- 2.1 Appropriate Usage . . . 04
- 2.2 Important Safety Instructions . . . 05
- 2.3 Explanation of Symbols . . . 08

3 Introduction . . . 10
- 3.1 Photovoltaic Grid Connected System . . . 10
- 3.2 Basic Features . . . 12
- 3.3 Overview of the Inverter . . . 12
- 3.4 Dimension . . . 13
- 3.5 Principle Description . . . 14

4 Technical Data . . . 16
- 4.1 Dc Input . . . 16
- 4.2 Ac Output . . . 17
- 4.3 Efficiency, Safety and Protection . . . 18
- 4.4 General Data . . . 19

5 Mechanical Installation . . . 20
- 5.1 Installation Precaution . . . 20
- 5.2 Selection for the Installation Position . . . 20
  - 5.2.1 Installation Environment Required . . . 21
  - 5.2.2 Installation Carrier Required . . . 21
  - 5.2.3 Installation Angle Required . . . 22
  - 5.2.4 Installation Space Required . . . 23
- 5.3 Tools Preparation . . . 24
- 5.4 Check for Transport Damages . . . 25
- 5.5 Packing Lists . . . 25
- 5.6 Installation steps . . . 26
  - 5.6.1 Installation Steps of Mounting the Inverter on the Wall . . . 26
  - 5.6.2 Installation Steps of Mounting the Inverter on the Stand . . . 27

6 Electrical Connection. 29
6.1 Grounding Connection 29
6.2 PV String Connection 30
6.3 Grid Connection 35
6.4 Communication Connection 40
6.4.1 Communication Signal Definition. 40
6.4.2 Connection Steps of Communication Cable 41
6.4.3 Release Steps of Communication Cable. 42
6.5 Parallel Connection 43
6.5.1 Datahub Parallel Connection 43
6.5.2 Modbus Parallel Connection 44
6.6 Control the Output Power by Connecting RRCR 46
6.7 Monitoring Connection 48
7 Start the Inverter. 50
8 Firmware Upgrading. 53
9 Setting for Inverter with LCD 55
10 Troubleshooting 71
10.1 Troubleshooting 71
10.2 Routine Maintenance. 78
11 Decommissioning 80
11.1 Dismantling the Inverter. 80
11.2 Packaging 80
11.3 Storage and Transportation 80
11.4 Disposing of the inverter. 80
12 Disclaimer 81
* Warranty Registration Form

1 Notes on this Manual

1.1 Scope of Validity

This manual is an integral part of X3-FORTH series. It describes the assembly, installation, commissioning, maintenance, and failure of the product. Read it carefully before operating.

X3-FTH-40K-LV	X3-FTH-50K-LV	X3-FTH-60K-LV	X3-FTH-70K-LV
X3-FTH-75K(L) X3-FTH-75K	X3-FTH-80K(L) X3-FTH-80K	X3-FTH-100K(L) X3-FTH-100K	X3-FTH-110K(L) X3-FTH-110K
X3-FTH-120K(L) X3-FTH-120K	X3-FTH-125K(L) X3-FTH-125K	X3-FTH-136K-MV(L) X3-FTH-136K-MV	X3-FTH-150K-MV(L) X3-FTH-150K-MV

Note: “X3”: means three phases, “FTH” means FORTH, “80K” means 80 kW.
Each model is available with LED indicator lights and LCD.
40kW/50kW/60kW/70kW inverters work in the 127V/220V low voltage range.
75kW/80kW/100kW/110kW/120kW/125kW inverters work in the 220V/380V voltage range. 136kW/150kW inverters work in the 500V/540V medium voltage range.
Display: LED indicators(by default), models with (L) will have LCD screen instead of LED indicators.
Keep this manual in a place where it is accessible all the time.

1.2 Target Group

This manual is for qualified electricians. The tasks described in this manual only can be performed by qualified electricians.

1.3 Symbols Used

The following types of safety instructions and general information appear in this document as described below:



DANGER!
“Danger” indicates a hazardous situation which, if not avoided, will result in death or serious injury.



WARNING!
“Warning” indicates a hazardous situation which, if not avoided, could result in death or serious injury.



CAUTION!
“Caution” indicates a hazardous situation which, if not avoided, could result in a minor or moderate injury.



NOTE!
“Note” provides tips that are valuable for the optimal operation of your product.

2 Safety

2.1 Appropriate Usage

The inverters are PV inverters which can convert the DC current of the PV generator into AC current and feed it into the public grid.

Surge protection devices (SPDs) for PV installation



WARNING!
- Over-voltage protection with surge arresters should be provided when the PV power system is installed.
- The grid connected inverter is fitted with SPDs in MAINS side.

Induced surges are the more likely cause of lightning damage in the majority of installations, especially in rural areas where electricity is usually provided by long overhead lines. Surges may be induced on both the PV array conductors or the AC cables leading to the building.

Specialists in lightning protection should be consulted in the actual application. Using appropriate external lightning protection, the effect of a direct lightning strike into a building can be mitigated in a controlled way, and the lightning current can be discharged into the ground.

Installation of SPDs to protect the inverter against mechanical damage and excessive stress includes a surge arrester in the case of a building with external lightning protection system (LPS) when separation distance is kept.

To protect the DC system, surge protection device (SPD type 2) should be fitted at the inverter end of the DC cabling and at the array located between the inverter and the PV generator, if the voltage protection level (VP) of the surge arresters is greater than 1100V, an additional SPD type 2 is required for surge protection for electrical devices.

To protect the AC system, surge protection devices (SPD type 2) should be fitted at the main incoming point of AC supply (at the consumer's cutout) , located between the inverter and the meter / distribution system; SPD (test impulse D1) for signal line according to EN 61632-1.

Spark gap protection devices are not suitable to be used in DC circuits once conducting, they won't stop conducting until the voltage passes through their terminals typically less than 30 volts.

- Anti-Islanding Effect

Islanding effect is a special phenomenon that grid-connected PV system still supplies power to the nearby grid when electrical grid power is no longer present. It is dangerous for maintenance personnel and the public.
The inverter provides Active Frequency Drift (AFD) to prevent islanding effect.

2.2 Important Safety Instructions



DANGER!
Danger to life due to high voltages in the inverter!
- All work must be carried out by qualified electrician.
- The appliance is not to be used by children or persons with reduced physical sensory or mental capabilities, or lack of experience and knowledge, unless they have been given supervision or instruction.
- Children should be supervised to ensure that they do not play with the appliance.



CAUTION!
- Danger of burn injuries due to hot enclosure parts!
- During operation, the upper lid of the enclosure and the enclosure body may become hot.
- Only touch the lower enclosure lid during operation.



CAUTION!
- Possible damage to health as a result of the effects of radiation!
- Do not stay closer than 20 cm to inverter for any length of time.



NOTE!
Grounding the PV generator.
- Comply with the local requirements for grounding the PV modules and the PV generator. We recommend connecting the generator frame and other electrically conductive surfaces in a manner which ensures continuous conduction and ground these in order to have optimal protection of system and persons.



WARNING!
• Ensure input DC voltage ≤Max. DC voltage. Over voltage may cause permanent damage to inverter or other losses, which will not be included in warranty!



WARNING!
• Authorized service personnel must disconnect both AC and DC power from the inverter before attempting any maintenance or cleaning or working on any circuits connected to the inverter.



WARNING!
Do not operate the inverter when the device is running.



WARNING!
Risk of electric shock!

• Prior to the application, please read this section carefully to ensure correct and safe application. Please keep the user manual properly stored.
• Use only attachments recommended. Otherwise may result in a risk of fire, electric shock, or injury to a person.
• Make sure that existing wiring is in good condition and that wire is not undersized.
• Do not disassemble any parts of inverter that are not mentioned in installation guide. It contains no user-serviceable parts. See Warranty for instructions on obtaining service. Attempting to service the inverter yourself may result in a risk of electric shock or fire and will void your warranty.
• Keep away from flammable, explosive materials to avoid a fire disaster.
• The installation place should be away from humid or corrosive substances.
• Authorized service personnel must use insulated tools when installing or working with this equipment.
• PV modules shall have an IEC 61730 Class A rating.
• Never touch either the positive or negative pole of PV connecting device. Strictly prohibit touching both of them at the same time.
• The unit contains capacitors that remain charged to a potentially lethal voltage after the MAINS and PV supplies have been disconnected.



WARNING!
Hazardous voltage will present for up to 5 minutes after disconnection from power supply.

• CAUTION-RISK of electric shock from energy stored in capacitor. Never operate on the solar connectors, the MAINS cables, PV cables or the PV generator when power is applied. After switching off the PV and Mains, always wait 5 minutes to let the intermediate circuit capacitors discharge before you unplug DC and MAINS connectors.
• Strictly prohibit the dismantling. Even in the unlikely event that you have to dismantle the machine, you must not touch any internal parts.

PE Connection and Leakage Current

• The inverter incorporates a certified internal Residual Current Device (RCD) in order to protect against possible electrocution and fire hazards in case of a malfunction in the cables or the inverter. There are two-trip thresholds for the RCD as required for certification (IEC 62109-2: 2011) .
• The default value for electrocution protection is 30 mA, and for slow rising current is 300 mA.
• If an external RCD is required by local regulations, check which type of RCD is required for relevant eletric code. It recommends using a type-A RCD. The recommended RCD value is 300 mA unless a lower value is required by the specific local electric codes. When required by local regulations, the use of an RCD type B is permitted.

The device is intended to connect to a PV generator with a capacitance limit of approx 700 nf.



WARNING!
• High leakage current!
• Earth connection essential before connecting supply.

• Incorrect grounding can cause physical injury, death, or equipment malfunction and increase electromagnetic.
• Make sure that grounding conductor is adequately sized as required by safety regulations.
• Do not connect the ground terminals of the unit in series in case of a multiple installation. This product can cause current with a DC component.

For the United Kingdom
• The installation that connects the equipment to the supply terminals shall comply with the requirements of BS 7671.
• The Electrical installation of PV system shall comply with requirements of BS 7671 and IEC 60364-7-712.

• No protection settings can be altered without authorization.
• The installer shall ensure that equipment is installed and operated to maintain at all times in compliance with the requirements of ESQCR22 (1) (a) .

For Australia and New Zealand
• Electrical installation and maintenance shall be conducted by licensed electrician and shall comply with Australia National Wiring Rules.

2.3 Explanation of Symbols

This section gives an explanation of all the symbols shown on the inverter and on the type label.

● Symbols on the Inverter

Symbol	Explanation
	Communication indicator
	DC connection indicator
	Grid connection indicator
	Alarm indicator

● Symbols on the Type Label

Symbol	Explanation
	CE mark. The inverter complies with the requirements of the applicable CE guildlines.
	TUV certificated
	RCM remark
	Beware of hot surface. The inverter can become hot during operation. Avoid contact during operation.

	Danger of high voltages. Danger to life due to high voltages in the inverter!
	Danger. Risk of electric shock!
	Observe enclosed documentation.
	The inverter can not be disposed together with the household waste. Disposal information can be found in the enclosed documentation.
	Do not operate this inverter until it is isolated from mains and on-site PV generation suppliers.
	Danger to life due to high voltage. There is residual voltage in the inverter which needs 5 minutes to discharge. • Wait 5 minutes before you open the upper lid or the DC lid.

Note: The table is only used for the description of symbols which may be used on the inverter. Please be subject to the actual symbols on the device.

3 Introduction

3.1 Photovoltaic Grid Connected System

The inverter is a three-phase transformerless grid-connected inverter. It is an important part of photovoltaic power generation system. It converts the direct current generated by the photovoltaic panel into alternating current and also can be used to optimize self-consumption or feed into the public grid. The first figure shows the typical application scenario of 40 kW-125 kW inverter, and the second figure shows the typical application scenario of 136 kW-150 kW inverter.

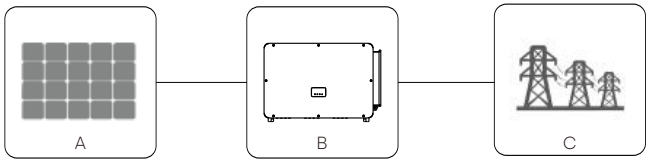

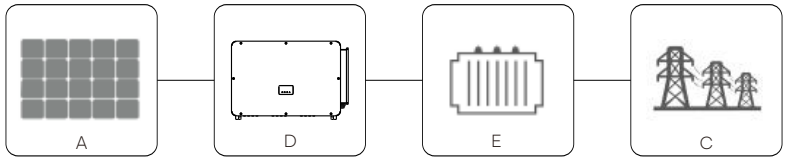

NO.	Definition
A	Photovoltaic string
B	X3-FORTH 40 kW-125 kW inverter
C	Power grid
D	X3-FORTH 136 kW-150 kW inverter
E	Transformer

> Warning!
> The inverter shall not be connected to the PV string requiring positive grounding or negative grounding. Do not connect local load between inverter and AC side circuit breaker!

The power grids supported by the inverter are TN-S, TN-C, TN-C-S, TT and IT.

40 kW-70 kW inverters are connected to 127 V / 220 V three-phase four wire power grid and 75 kW-125 kW inverters are connected to 380V / 400V three-phase four wire power grid, which can be connected with N line (or not), as shown in Figure 1;

136 kW and 150 kW models are directly connected to the medium voltage power grid through a 500 V or 540 V transformer without an N line access, as shown in Figure 2;

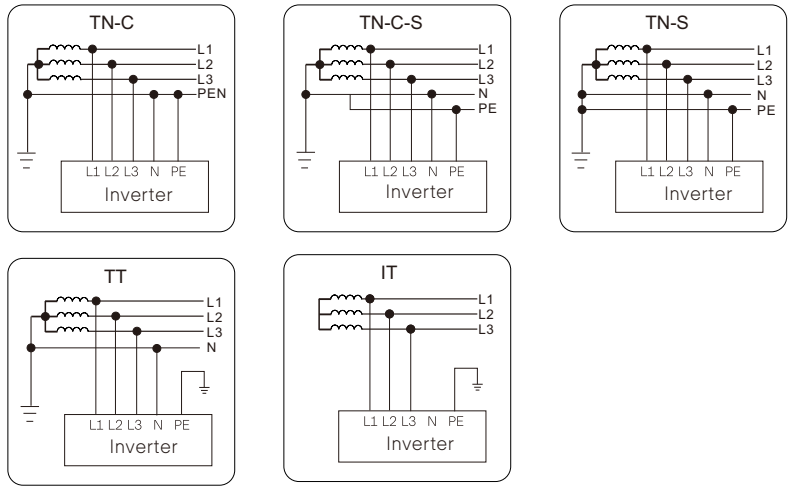

Figure 1

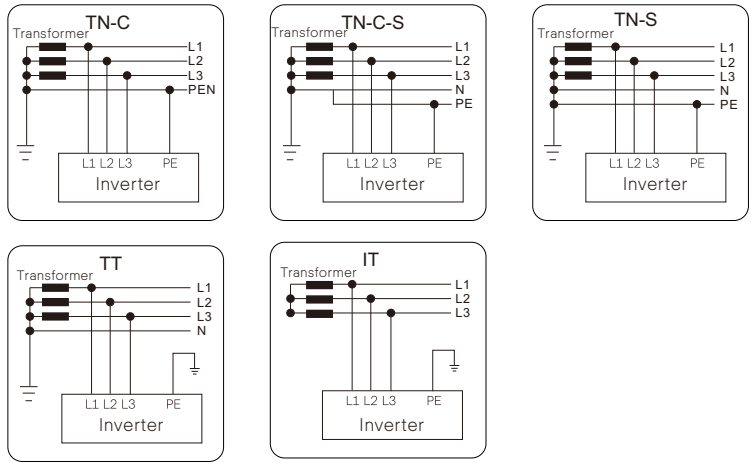

Figure 2

3.2 Basic Features

Thanks for your purchase of this series inverter. Basic features are as follows:
More energy harvest
· Maximum efficiency up to 99%
· 180~1000Vdc MPPT voltage range
· Maximum 12 MPPTs, 2 strings per MPP tracker
· 150% PV oversizing input, 110% overloading output
· Maximum 32A MPPT current

Safety and Reliability
· IP66 protection level
· AFCI protection (optional)
· AC terminal temperature detection
· Both AC and DC SPDs (Type 2) inside, Type 1 + 2 SPD is optional

Intelligence for easy maintenance and economy
· Built-in export power control
· Remote setting and upgrading
· 24 hours operation monitoring
· Smart I-V Curve Diagnosis supported
· Night-time reactive power compensation
· Aluminium AC cable connection available
· Fuse free design with smart string current monitoring
· Smart air cooling technique results in long lifetime of fans
· Advanced heat dissipation technology makes the system more than 5% lighter and smaller

3.3 Overview of the Inverter

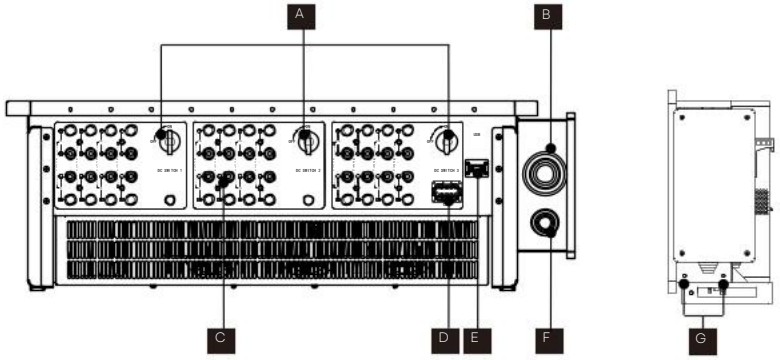

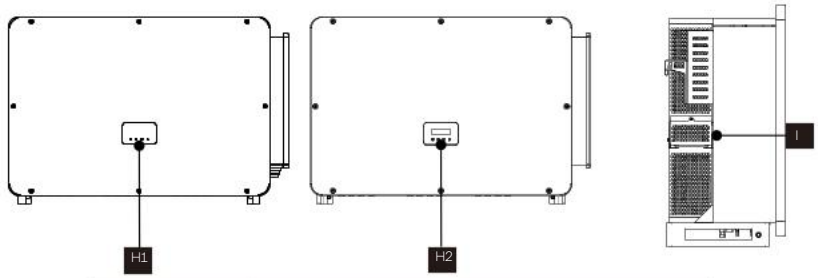

Object	Description Description
A	DC Switch
B	AC Connector
C	DC Connector
D	RS 485 / Meter / DRM connector (optional)
E	WiFi / LAN / 4G dongle connector (optional)
F	Ground Connector
G	Ground Screw
H1	LED indicator
H2	LCD (Optional)
I	Fan support (cooling fan inside)

WARNING!
Only authorized personnel is allowed to set the connection.

3.4 Dimension

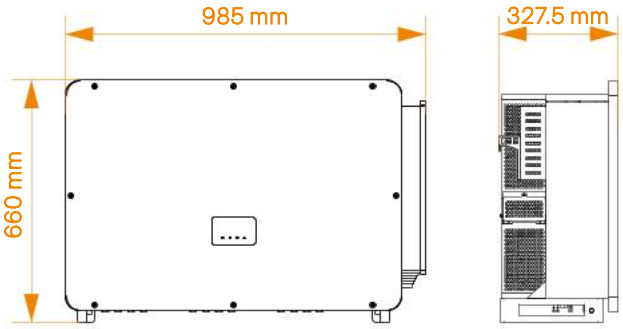

NOTE!
The dimension of the inverter with LCD is same as the inverter with LED.

3.5 Principle Description

The inverter is equipped with multi-channel MPPT for DC input to ensure maximum power even under different photovoltaic input conditions. The inverter unit converts DC into AC that meets the requirements of the power grid and feeds it into the power grid. The lightning arrester at AC / DC sides can realize the function of surge protection.
The principle design of an inverter is shown in the figure below:

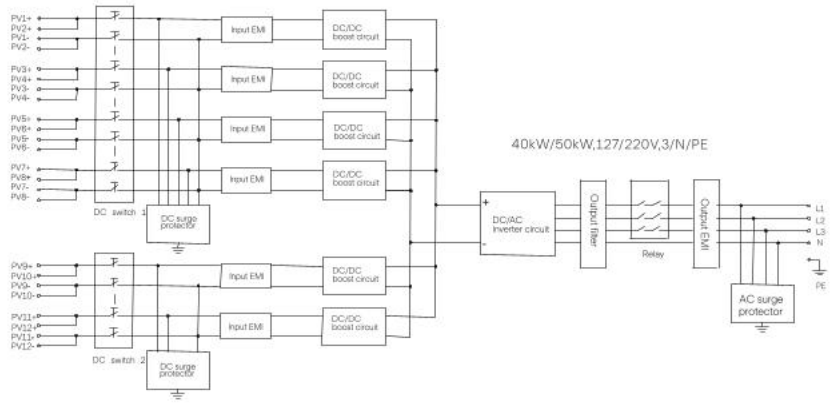

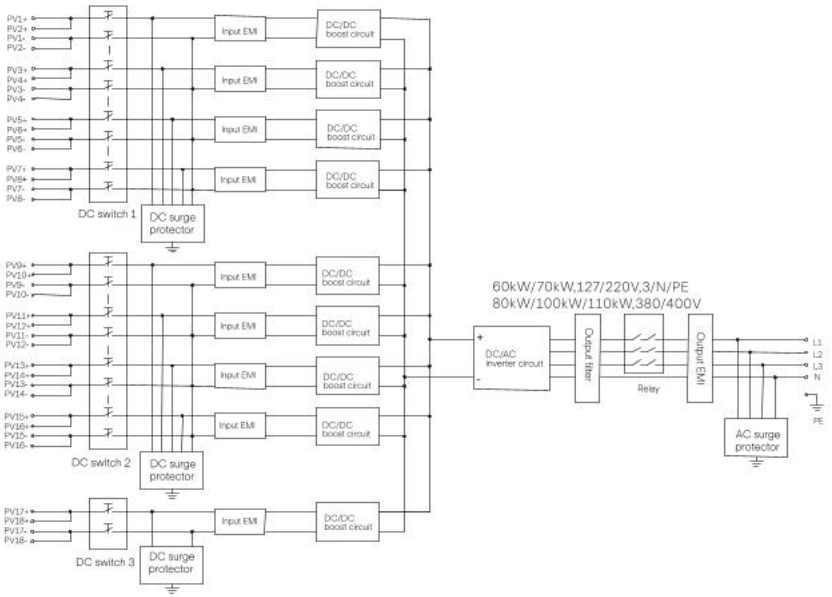

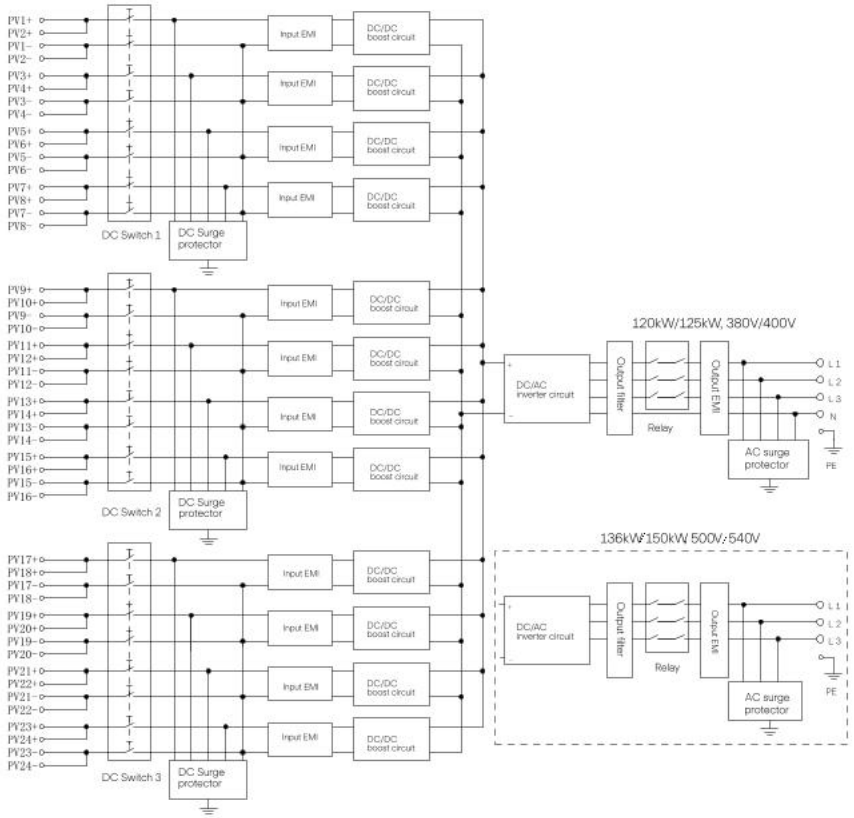

4 Technical Data

4.1 DC Input

➢ DC input of 40kW-70kW inverter

Model	X3-FTH-40K-LV	X3-FTH-50K-LV	X3-FTH-60K-LV	X3-FTH-70K-LV
Max. PV array input power [kWp]	60	75	90	105
Max. PV input voltage [V]	800	800	800	800
Nominal input voltage [V]	360	360	360	360
Startup voltage [V]	200	200	200	200
MPP tracker voltage range [V]	180-650	180-650	180-650	180-650
Max. PV input current per MPPT [A]	32	32	32	32
Max. short circuit current [A] / MPPT	46	46	46	46
No. of MPP trackers	6	6	9	9
Strings per MPP tracker	2	2	2	2

➢ DC input of 75kW-150kW inverter

Model	X3-FTH-75K(L) X3-FTH-75K	X3-FTH-80K(L) X3-FTH-80K	X3-FTH-100K(L) X3-FTH-100K	X3-FTH-110K(L) X3-FTH-110K	X3-FTH-120K(L) X3-FTH-120K	X3-FTH-125K(L) X3-FTH-125K	X3-FTH-136K-MV(L) X3-FTH-136K-MV	X3-FTH-150K-MV(L) X3-FTH-150K-MV
Max. PV array input power [kWp]	120	120	150	165	180	188	204	225
Max. PV input voltage [V]	1100	1100	1100	1100	1100	1100	1100	1100
Nominal input voltage [V]	580/600	580/600	580/600	580/600	580/600	580/600	730/785	730/785
Startup voltage [V]	200	200	200	200	200	200	200	200
MPP tracker voltage range [V]	180-1000	180-1000	180-1000	180-1000	180-1000	180-1000	180-1000	180-1000
Max. PV input current per MPPT [A]	32	32	32	32	32	32	32	32
Max. short circuit current [A] / MPPT	46	46	46	46	46	46	46	46
No. of MPP trackers	9	9	9*	9*	12	12	12	12
Strings of MPP tracker	2	2	2	2	2	2	2	2

*Note: Optional 12Mppts version.

4.2 AC Output

➢ AC output of 40kW-70kW inverter

Model	X3-FTH-40K-LV	X3-FTH-50K-LV	X3-FTH-60K-LV	X3-FTH-70K-LV
Nominal AC output power [kW]	40	50	60	70
Nominal AC output current [A]	105	131.3	157.5	183.7
Max. AC output apparent power [kVA]	44	55	66	70
Max. AC output current [A]	115.5	144.5	173.5	183.7
Current (inrush) [A]	115.5	144.5	173.5	183.7
Nominal AC voltage [V]	127/220, 3W/(N)/PE			
Nominal AC frequency [Hz]	50/60			
Frequency range of power grid [Hz]	50/60; ±5			
THDi (Rated power) [%]	<3%			
Displacement Power factor	0.8 leading-0.8 lagging			
Max. output fault current [A]	370			
Max. output overcurrent protection [A]	370			

➢ AC output of 75kW-150kW inverter

Model	X3-FTH-75K(L) X3-FTH-75K	X3-FTH-80K(L) X3-FTH-80K	X3-FTH-100K(L) X3-FTH-100K	X3-FTH-110K(L) X3-FTH-110K	X3-FTH-120K(L) X3-FTH-120K	X3-FTH-125K(L) X3-FTH-125K	X3-FTH-136K-MV(L) X3-FTH-136K-MV	X3-FTH-150K-MV(L) X3-FTH-150K-MV
Nominal AC output power [kW]	75	80	100	110	120	125	136	150
Nominal AC output current [A]	113.7 /108.7	121.3 /116	151.6 /145	166.7 /159.5	181.9 /174	189.4 /181.2	157.1 /145.4	173.2 /160.4
Max. AC output apparent power [KVA]	75	88	110	121	132	132	149.6	165
Max.AC output current [A]	113.7 /108.7	133.4 /127.6	166.7 /159.5	183.4 /175.4	200 /191.3	200 /191.3	172.8 /160	190.6 /176.5
Current (inrush) [A]	113.7 /108.7	133.4 /127.6	166.7 /159.5	183.4 /175.4	200 /191.3	200 /191.3	172.8 /160	190.6 /176.5
Nominal AC voltage [V]	220/380, 230/400, 3W(N)/PE						500/540, 3W/PE	
AC voltage range [V]	304-480						425-594	
Nominal AC frequency [Hz]	50/60							
Frequency range of power grid [Hz]	50 (±5)/60 (±5)							
THDi (Rated power) [%]	<3							
Power factor range	0.8 leading-0.8 lagging							
Max. output fault current [A]	370							
Max. output overcurrent protection [A]	370							

4.3 Efficiency, Safety and Protection

➢ Efficiency, safety and protection of 40kW-70kW inverter

Model	X3-FTH-40K-LV	X3-FTH-50K-LV	X3-FTH-60K-LV	X3-FTH-70K-LV
Max. efficiency [%]	98.0			
Safety & Protection				
DC Switch	YES			
DC isolation protection	YES			
Over/under voltage protection	YES			
Grid monitoring	YES			
DC injection monitoring	YES			
Anti-Islanding protection	YES			
Residual current detection	YES			
SPD (DC/AC)	Type II/Type II			

➢ Efficiency, safety and protection of 75kW-150kW inverter

Model	X3-FTH-75K(L) X3-FTH-75K	X3-FTH-80K(L) X3-FTH-80K	X3-FTH-100K(L) X3-FTH-100K	X3-FTH-110K(L) X3-FTH-110K	X3-FTH-120K(L) X3-FTH-120K	X3-FTH-125K(L) X3-FTH-125K	X3-FTH-136K-MV(L) X3-FTH-136K-MV	X3-FTH-150K-MV(L) X3-FTH-150K-MV
Max. efficiency [%]	98.6						99.0	
European weighted efficiency [%]	98.3						98.5	
Safety & Protection								
Over/under voltage protection	YES							
IDC isolation protection	YES							
Grid monitoring	YES							
DC injection monitoring	YES							
Residual current detection	YES							
Anti-Islanding protection	YES							
String fault detection	YES							
SPD (DC/AC)	Type II/Type II							
Arc-fault circuit interrupter (AFCI)	Optional							
AC terminals over temperature detection	YES							
AC auxiliary power supply (APS)	Optional							

** Please refer to the actual certifications of the specific model.

4.4 General Data

➢ General data of 40kW-70kW inverter

Model	X3-FTH-40K-LV	X3-FTH-50K-LV	X3-FTH-60K-LV	X3-FTH-70K-LV
Ingress protection	IP66			
Operating ambient temperature range [°C]	-25 ~ +60			
Relative humidity [%]	0~100			
Cooling concept	Smart fan cooling			
Altitude [m]	4000			
Dimension [W/H/D] [mm]	985 × 660 × 327.5			
Weight [kg]	80.5		83	
Communication interfaces	RS485/ (Optional: Pocket Wifi/LAN/4G)/USB			
Safety standard	IEC/EN 62109-1; IEC/EN 62109-2; NB/T 32004			
EMC	IEC/EN 61000; NB/T 32004			
Certification	NB/T 32004; IEC 61727; IEC 62116; VDE4110; VDE4105; EN50549; NRS097; G99; RD1699; PPDS; CEI0-21; CEI0-16; VFR 2019; IEC 61683; IEC 60068; EN 50530; AS4777.2			

➢ General data of 75kW-150kW inverter

Model	X3-FTH-75K(L) X3-FTH-75K	X3-FTH-80K(L) X3-FTH-80K	X3-FTH-100K(L) X3-FTH-100K	X3-FTH-110K(L) X3-FTH-110K	X3-FTH-120K(L) X3-FTH-120K	X3-FTH-125K(L) X3-FTH-125K	X3-FTH-136K-MV(L) X3-FTH-136K-MV	X3-FTH-150K-MV(L) X3-FTH-150K-MV
Ingress protection	IP66							
Operating ambient temperature range [°C]	-25 ~ +60							
Relative humidity [%]	0~100							
Cooling concept	Smart fan cooling							
Max. operation altitude [m]	4000							
Dimension [W/H/D] [mm]	985 × 660 × 327.5							
Weight [kg]	83				87			
Display	LCD (16x2, optional)/LED x 4							
Optional monitoring dongle	Pocket WiFi/LAN/4G							
Communication interfaces	RS485 / USB / DRM / PLC(Optional)							
Safety	IEC/EN 62109-1; IEC/EC 62109-2; NB/T 32004							
EMC	IEC/EN 61000; NB/T 32004							
Cetification	NB/T 32004; IEC 61727; IEC 62116; VDE4110; VDE4105; EN50549; NRS097; G99; RD1699; PPDS; CEI0-21; CEI0-16; VFR 2019; IEC 61683; IEC 60068; EN 50530; AS4777.2							

Note: At an ambient temperature of 25°C, the maximum short-circuit current of 46A allows 1 MPPT to be short-circuited for half an hour. The maximum short-circuit current of 40A allows 3 MPPTs to be short-circuited for 2 hours.
AC voltage and frequency ranges may vary depending on the specific state grid.

5 Mechanical Installation

5.1 Installation Precaution

DANGER!
Before installation, make sure there is no electrical connection.
Before drilling holes on the wall, make sure the layout of the water pipes and cables inside the wall is clearly known to avoid any danger.

CAUTION!
Personal injury and machine damage may be caused by improper movement of the inverter.
Please strictly comply with the instructions of this manual when moving and installing the inverter.

5.2 Selection for the Installation Position

The installation location selected for the inverter is quite critical in the aspect of the guarantee of machine safety, service life and performance.

• The inverter has IP66 ingress protection, which allows it to be installed outside the door.

• The installation position shall be convenient for wiring connection, operation and maintenance.

5.2.1 Installation Environment Required

The installation position shall be well ventilated.
Make sure the installation site meets the following conditions:
Not be exposed to glare.
Not in areas where highly flammable materials are stored.
Not in potentially explosive areas.
Not in the cool air directly.
Not near the television antenna or antenna cable.
Not higher than an altitude of about 4000m above sea level.
Not in environment of precipitation or humidity (0-100%) .
Be sure the ventilation is good enough.
The ambient temperature is in the range of -25°C to +60°C.
The slope of the wall should be within ±5°.
Avoid direct sunlight, rain exposure, snow laying up during installing and operating.

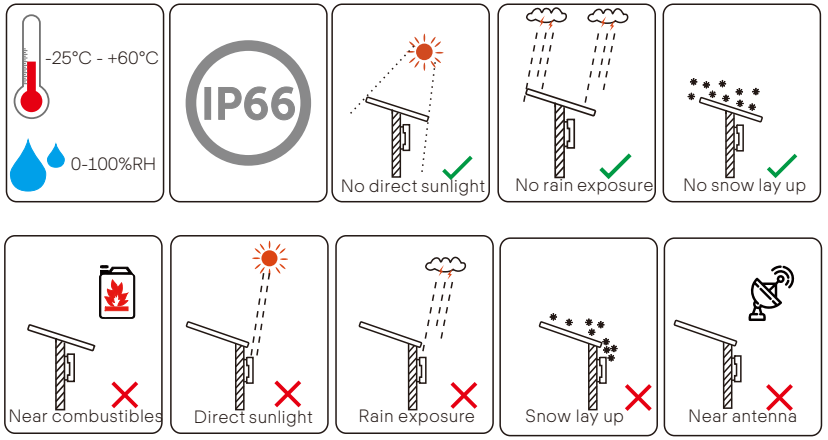

5.2.2 Installation carrier required

The wall or stand hanging the inverter should meet conditions below:
1) Solid brick / concrete, or strength equivalent mounting surface;
2) Inverter must be supported or strengthened if the strength of wall/stand isn't enough. (such as wooden wall, the wall covered by thick layer of decoration)

5.2.3 Installation Angle Required

The inclination angle of the installation shall not be greater than 5° and cannot be tilted forward, inverted, excessive back tilted or side tilted.
The inverter shall be installed more than 500 mm above the ground.

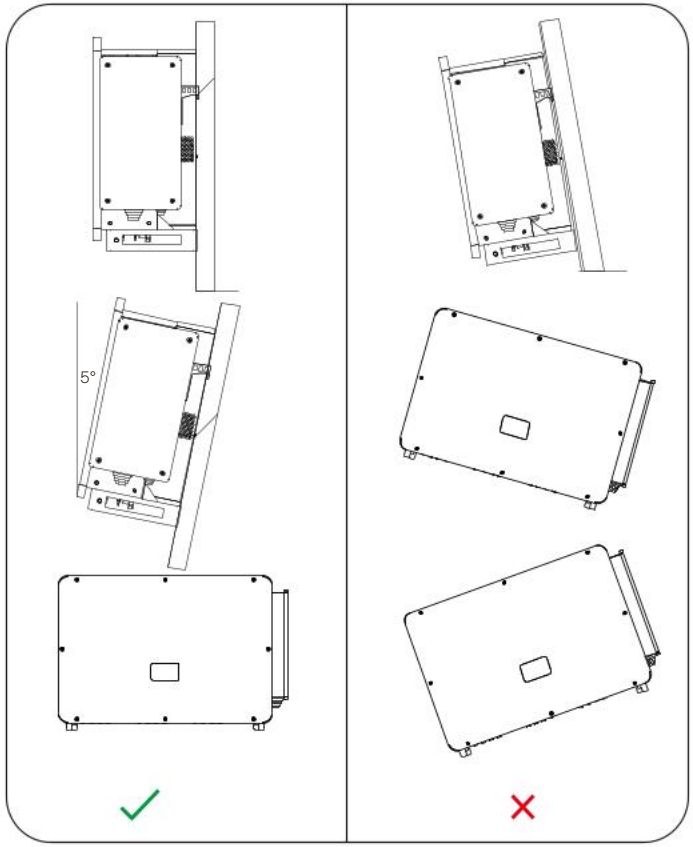

5.2.4 Installation Space Required

To ensure good heat dissipation and convenient disassembly, the minimum clearance around the inverter shall not be less than the following values, as shown in the following figure.

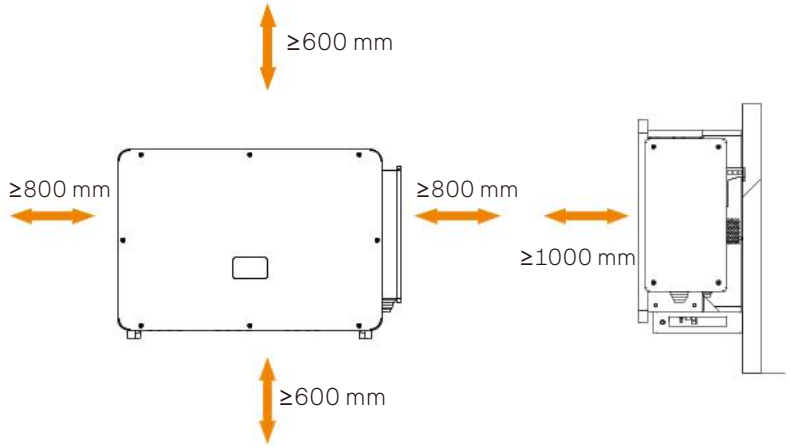

For multi-inverter installation, please reserve the space of 1200 mm at least between each left and right inverter and at least 600 mm between each upper and lower inverter.

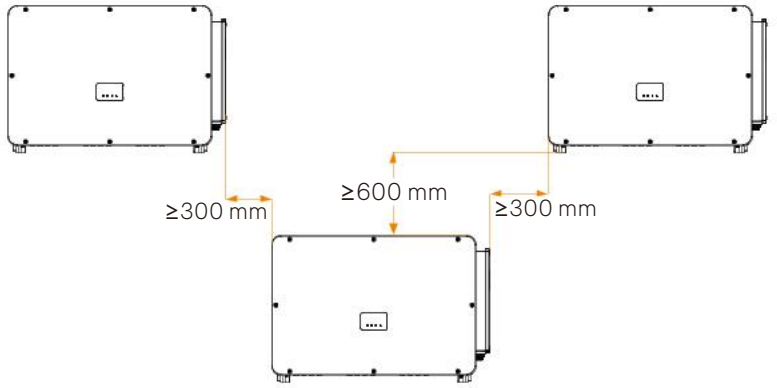

5.3 Tools Preparation for Installation and Connection



➢ Additionally required wires

Required Wires	Material	Cross Section	Wire Length
PV cable	Dedicated PV wire, copper, complying with 1,500 V standard	4-6 mm²	≤200 m
AC cable (40-125 kW)	Five-core copper wire	70 mm²-240 mm²	≤200 m
AC cable (136-150 kW)	Four-core copper wire	70 mm²-240 mm²	≤200 m
AC cable (40-125 kW)	Five-core aluminium wire	95 mm²-240 mm²	≤200 m
AC cable (136-150 kW)	Four-core aluminium wire	95 mm²-240 mm²	≤200 m
Grounding wire	Conventional yellow and green wire	35 mm²-120 mm²	≤200 m
Communication cable	Network cable CAT5 or better	0.5 mm²-0.75 mm²	≤200 m

5.4 Check for Transport Damages

Make sure the inverter is intact during transportation. If there are some visible damages, such as cracks, please contact your dealer immediately.

5.5 Packing Lists

Open the package and fetch out the product, check the accessories at first. The packing list shows as below.

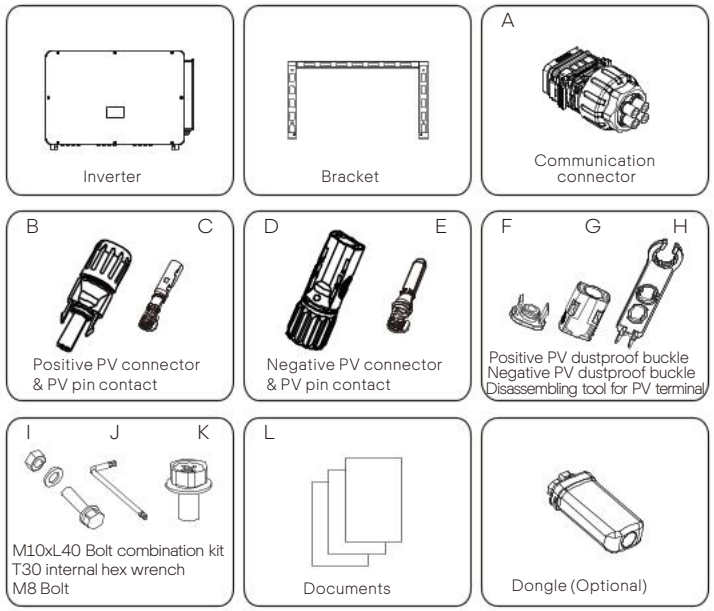

Item	Description	Quantity
/	Inverter	1 pc
/	Bracket	1 pc
A	Communication connector	1 pc
B	Positive PV connector	12 pairs for 40-50 kW 18 pairs for 60-110 kW 24 pairs for 120-150 kW
C	Positive PV pin contact	
D	Negative PV connector	12 pairs for 40-50 kW 18 pairs for 60-110 kW 24 pairs for 120-150 kW
E	Negative PV pin contact	
F	Positive PV dustproof buckle	6 pairs for 40-50 kW 8 pairs for 60-110 kW 12 pairs for 120-150 kW
G	Negative PV dustproof buckle	
H	Disassembling tool for PV terminal	1 pc
I	M10xL40 Bolt combination kit	4 pcs
J	T30 Internal hex wrench	1 pc
K	M8 Bolt	2 pcs
L	Documents	/
/	Dongle (Optional)	1 pc

* For the optional accessories, please be subject to the actual delivery.
* Please purchase OT terminals separately.

5.6 Installation Steps

5.6.1 Installation Steps of Mounting the Inverter on the Wall

➢ Step 1: Fix the bracket on the wall

a. Find out the bracket and M8 bolts (part K) from the accessory box as below: And prepare M10x80 iron expansion combination in advance. Please kindly note that M10x80 screws are not in the accessory box. Please prepare them in advance.

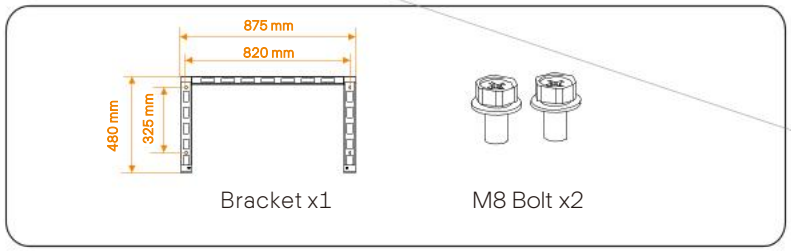

b. Use the bracket as a template for marking the positions of drilling holes on the wall with a spirit level and marker.
c. Use Φ13 drill to drill holes in accordance with the mark. The depth of the holes shall be at least 65 mm.
d. Insert the expansion screws into the holes, hang the bracket on the screw and fix it with a nut.

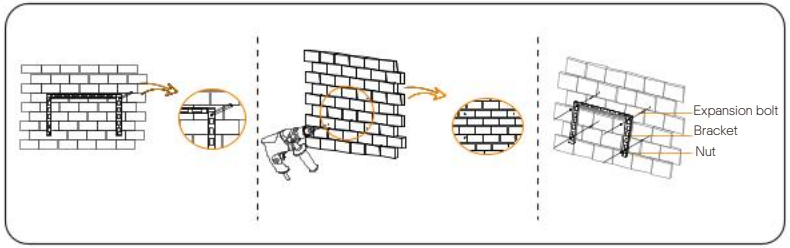

➢ Step 2: Hang the inverter on the bracket

a. Lift up the inverter. Two methods are available for your choice.
Method 1: Four installers directly hold the inverter on the two sides and lift it up.
Method 2: Install two lifting rings on the two sides of inverter and lift it up.

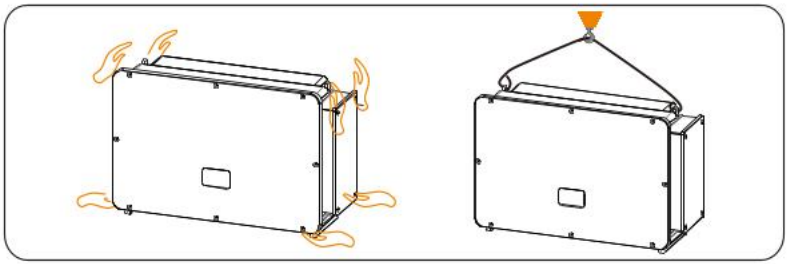

b. Hang the inverter on the bracket and secure it on the bracket with M8 bolts. (Torque: 7.0-8.5 N·m)

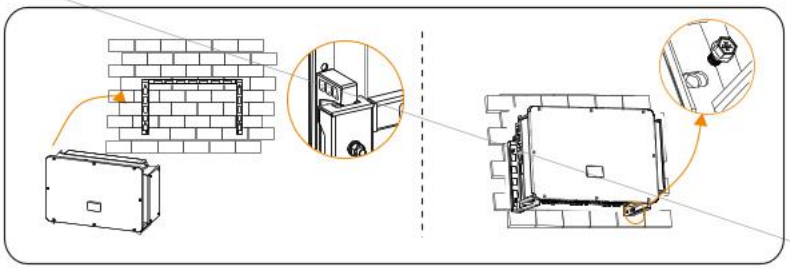

5.6.2 Installation Steps of Mounting the Inverter on the Stand

➢ Step 1: Fix the bracket on the stand

a. Find out the four M10x40 bolt combination kit (part I), bracket and two M8 bolts (part K) from the accessory box as below:

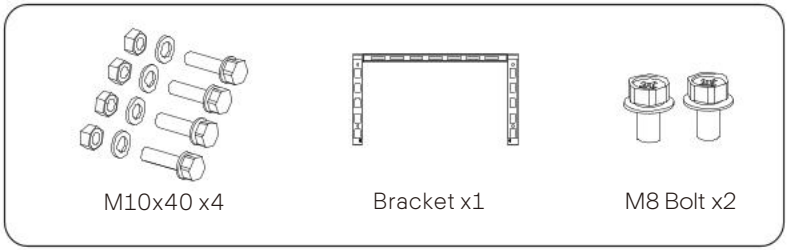

b. Use the bracket as a template for marking the position of drilling holes on the stand with a spirit level and marker.
c. Use Φ12 drill to drill holes in accordance with the mark.
d. Pre-install the bracket on the stand and screw in the M10X40 screws.

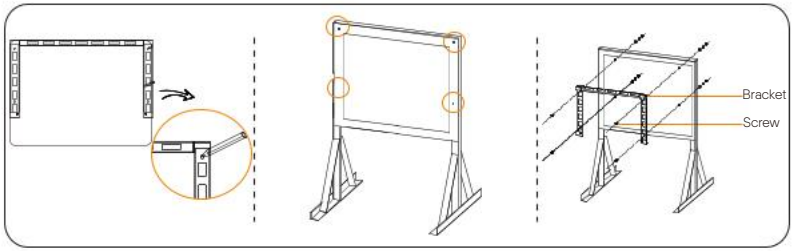

➢ Step 2: Hang the inverter on the bracket

a. Lift up the inverter. Two methods are available for your choice.
Method 1: Four installers directly hold the inverter on the two sides and lift it up.
Method 2: Install two lifting rings on the two sides of inverter and lift it up.

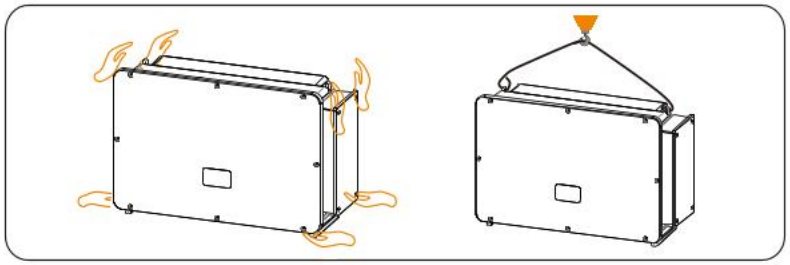

b. Hang the inverter on the bracket and secure it with M8 bolts.
(Torque: 7.0-8.5 N·m)

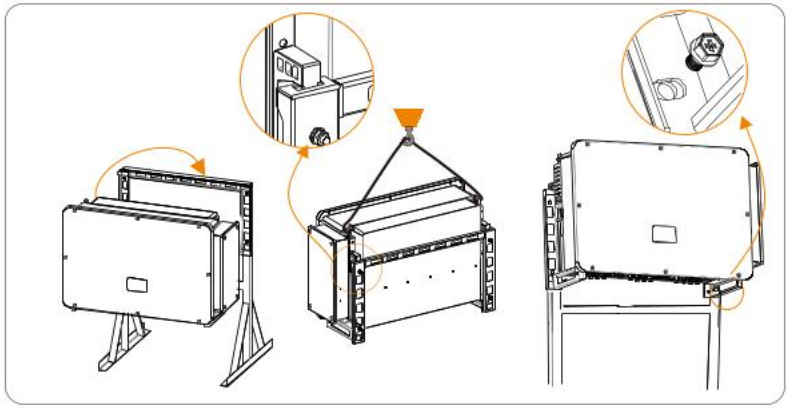

6 Electrical Connection

6.1 Grounding Connection

The uncharged metal parts in the photovoltaic power generation system, including the photovoltaic substrate bracket and the metal shell of the inverter, should be reliably grounded. The grounding part of multiple inverters and photovoltaic array shall be connected to the same grounding bus to establish reliable equipotential connection.

➢ Step 1: Make the grounding cable

a. Select OT copper terminal and 35-120 mm² yellow and green conductor with proper length by diagonal pliers. Use wire stripper to strip the insulation layer of the conductor end. The stripped length shall be as shown below:
b. Tighten the stripped end and pull the heat shrink tubing over the grounding cable. The heat shrink tubing must be at below cable section.

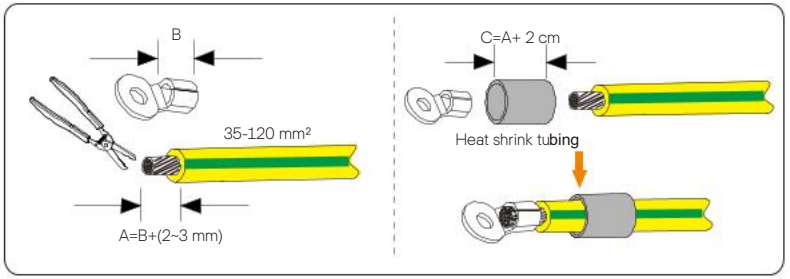

c. Insert the stripped section into the OT copper terminal and crimp with crimping tool.
d. Pull the heat shrink tubing over the stripped section of OT terminal and use heat gun to shrink it so that it can be in firm contact with OT terminal.

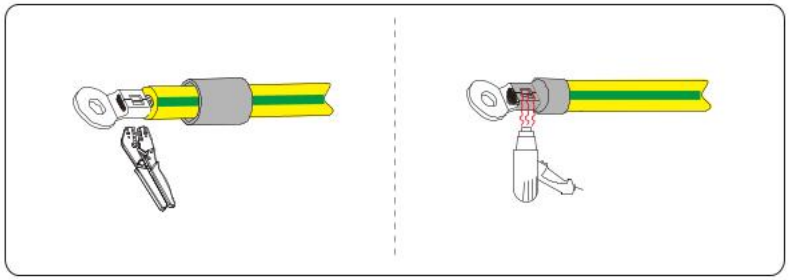

➢ Step 2: Connect the grounding cable to the inverter.

Connect the grounding cable to the inverter and fix it with torque 7.0-8.5 N·m.

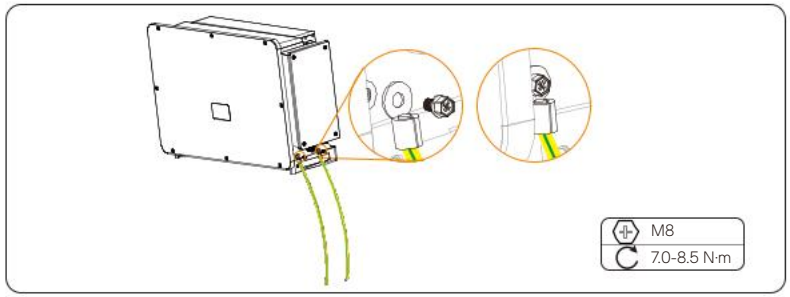

WARNING!
Be sure the ground wire must be connected!

6.2 PV String Connection

WARNING!
Before connecting the inverter, make sure that the open circuit voltage of the photovoltaic string shall not exceed 1100 V under any conditions, otherwise, the inverter will be damaged.

WARNING!
Do not ground the positive or negative pole of the PV string, otherwise it will cause serious damage to the inverter.

WARNING!
Make sure that the positive and negative poles of the PV string are correctly connected with the corresponding identification of the inverter.

➢ Step 1: Make the PV cable

a. Find out the positive/negative PV connectors and positive/ negative PV pin contacts (part B, C, D, E) from accessory box.

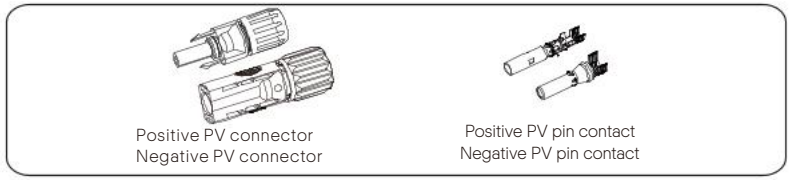

b. Turn off the DC switch and prepare a 4-6 mm² PV cable. Use wire stripper to strip 7 mm insulation layer of the PV cable end.

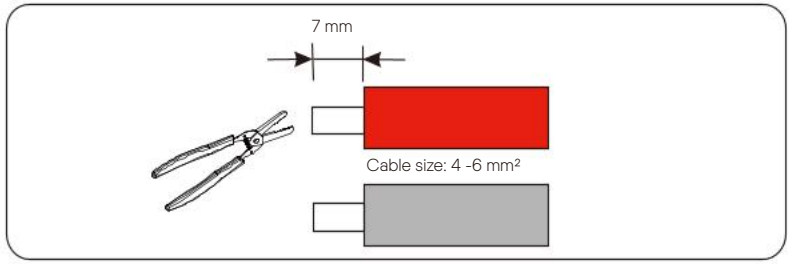

c. Tighten the stripped section and insert it into the PV pin contact. And use crimping tool for PV terminal to clamp it so that the stripped section of PV cable is in firm contact with PV pin contact.

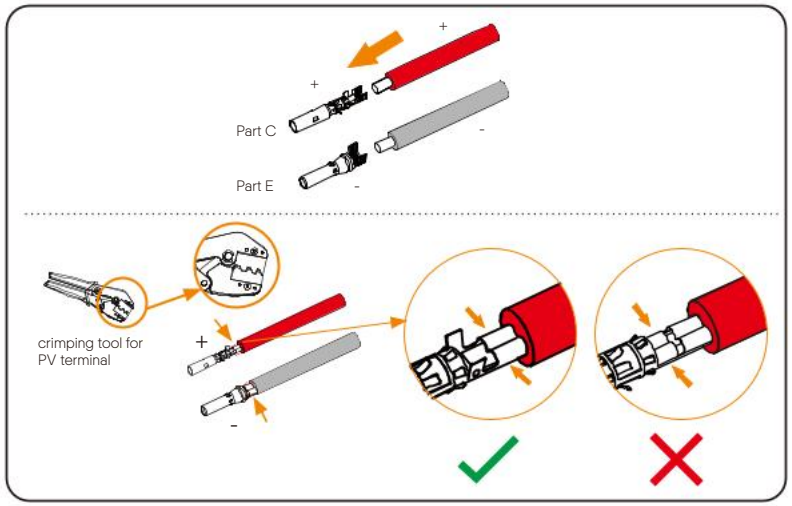

d. Insert the PV cable through fastening head and plug (male and female) and force the male or female plug to the cable. You will hear “Click” which indicates the connection is completed. Then tighten the fastening head.

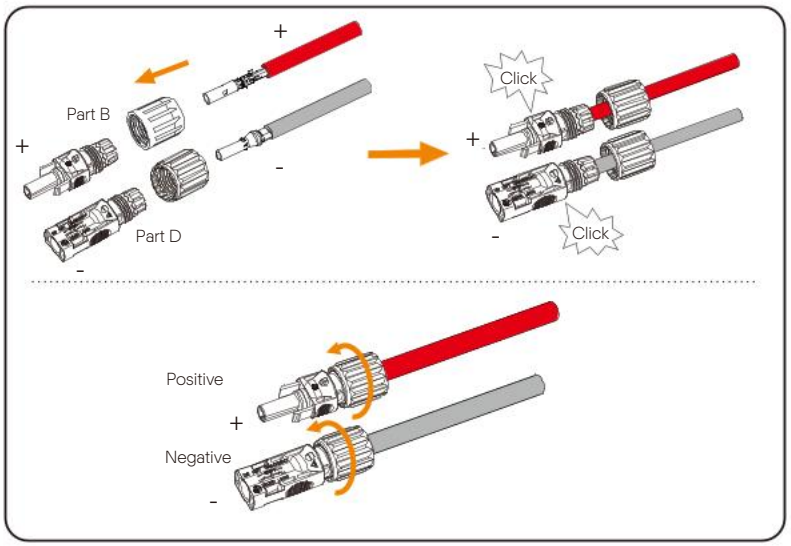

➢ Step 2: Measure the voltage of DC input

Use a multimeter to measure the PV voltage of DC input, verify the polarity of DC input cable, and ensure that the voltage fo each string is within the range of inverter.

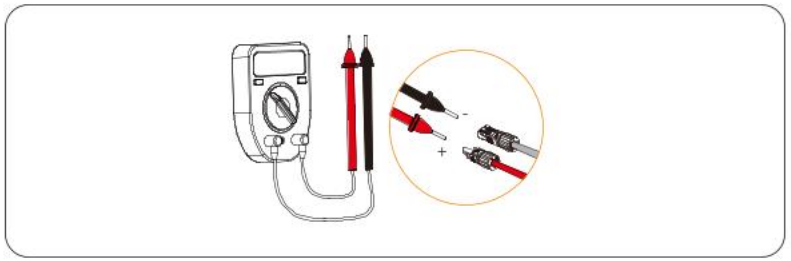

➢ Step 3: Connect the PV cable to the inverter

Connect the PV cable to the PV port on the inverter, shown as below:

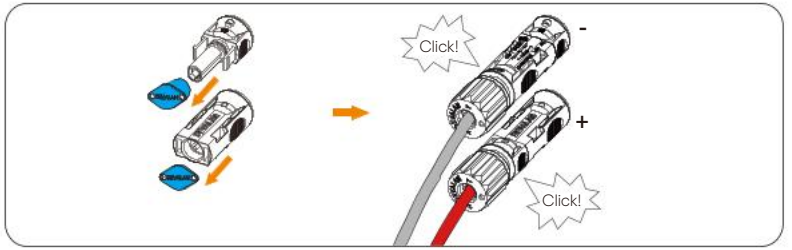

* Seal the unused PV terminals with the dustproof buckles (part F & G) from the accessory.

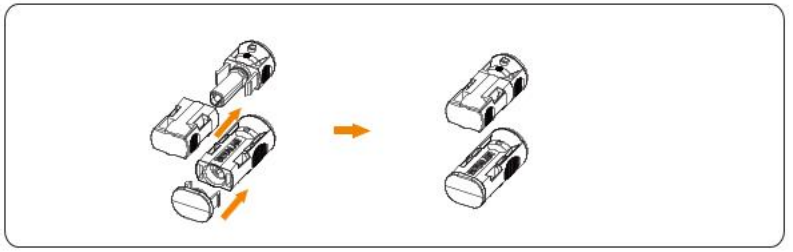

WARNING!
When the DC cable is reversely connected or the inverter fails to work normally, it is forbidden to turn off the DC switch directly or pull out the DC string.

The correct operation is as follows:
-Use a clamp current meter to measure DC string current.
-If it is greater than 0.5 A, please wait until the current is less than 0.5 A.
-Only when the current is less than 0.5 A, can the DC power be cut off and the DC string be pulled out.

The inverter damage caused by improper operation will not be included in the warranty.

Requirements for photovoltaic modules connecting to the same circuit:
-All PV modules shall be of the same specification.
-All PV modules have the same tilt angle and orientation.
-The open circuit voltage of the PV string shall not exceed 1100 V at the coldest expected temperature in time

WARNING!
Electric shock!

Do not touch live DC wires. When photovoltaic modules are exposed to light, high voltage will occur, which will lead to the risk of electric shock, resulting in death due to contact with DC conductor.

- Disassembling the dustproof buckles and the PV cables

Disassemble the dustproof buckles with the disassembling tool for PV terminal (part H).

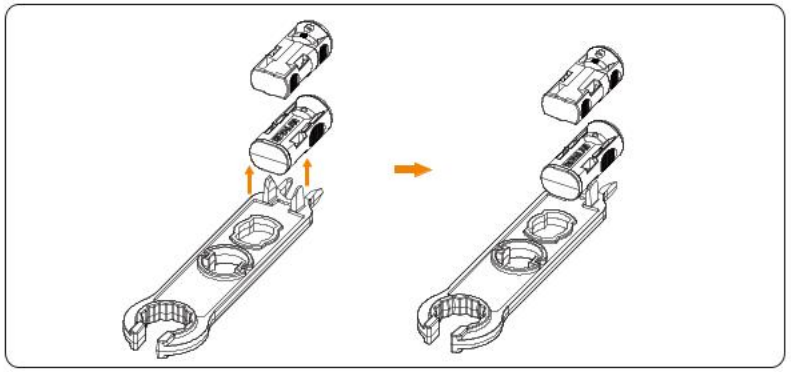

Disassemble the PV connectors with the disassembling tool for PV terminal. Then remove the PV cable and slightly pull out the PV connectors.

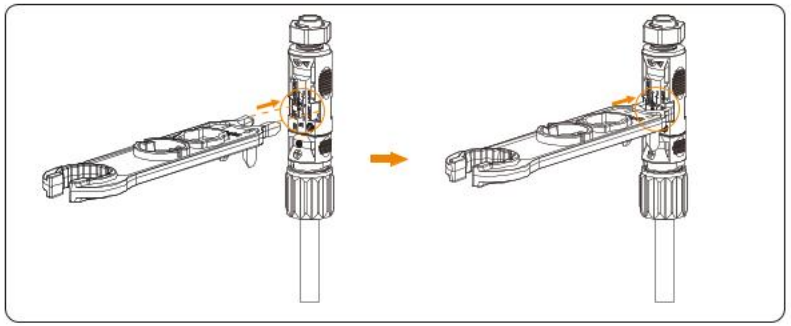

6.3 Grid Connection

WARNING!
Ensure electrical connection design meets local national and local standards.

WARNING!
The PE wire (ground wire) of the inverter must be reliably grounded.

WARNING!
Disconnect the circuit breaker or fuse of inverter and grid connection access point.

Note:
-It is recommended to add a circuit breaker or fuse on the AC side, whose specification is more than 1.25 times of rated AC output current.
-70~240 mm² copper wire is recommended. If aluminum wire is needed, please check the requirements of the wire and then purchase by yourself.
-Use copper terminal for copper wire, use copper aluminum terminal for aluminum wire, not aluminum terminal directly.

NOTE!
40 kW-70 kW / 75 kW-120 kW inverter adopts 4-pin AC terminal;
136 kW/150 kW inverter adopts 3-pin AC terminal.

➢ Step 1: Make the AC cable

a. Select the appropriate OT terminal and blue, red and yellow and green cable with proper length, and use wire stripper to strip the insulation layer of the AC cable end. The stripped insulation layer shall be 2-3 mm longer than “D” part of OT terminal.

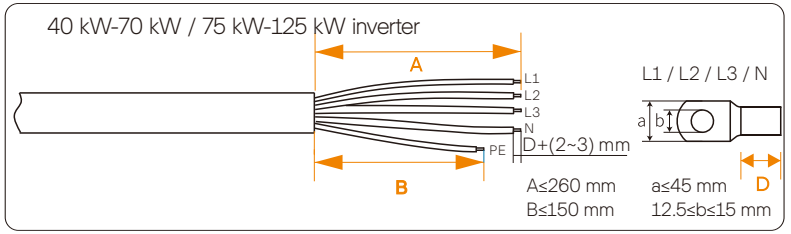

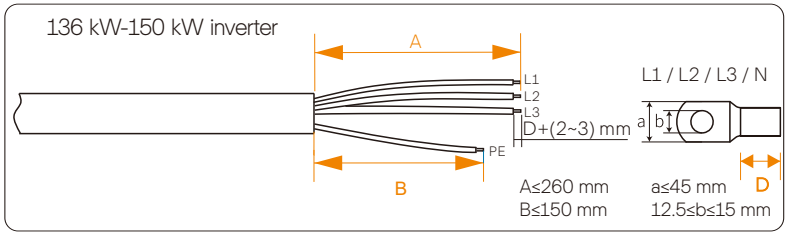

b. Pull the heat-shrink tubing over AC cable.
c. Insert the stripped section into OT terminal and crimp with crimping tool and pull the heat shrink tubing over the crimped section of OT terminal. Then use heat gun to shrink it so that they are in firm contact with OT terminal.

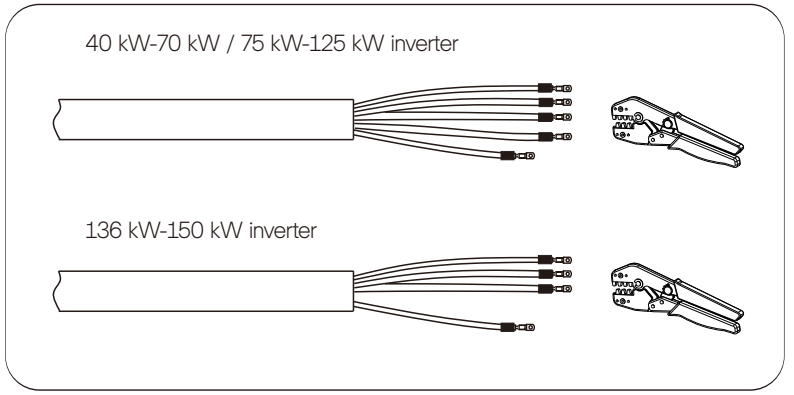

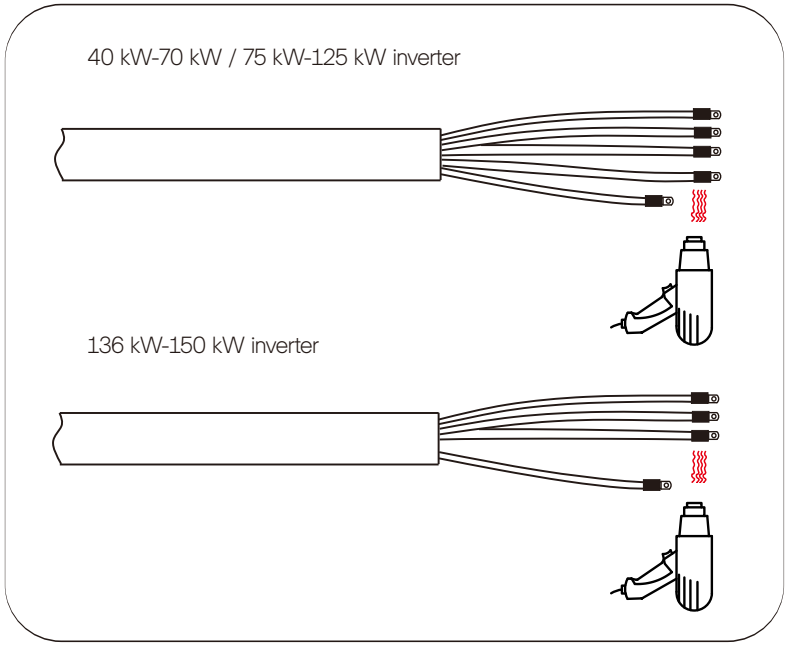

d. Open the cover of the wiring box.

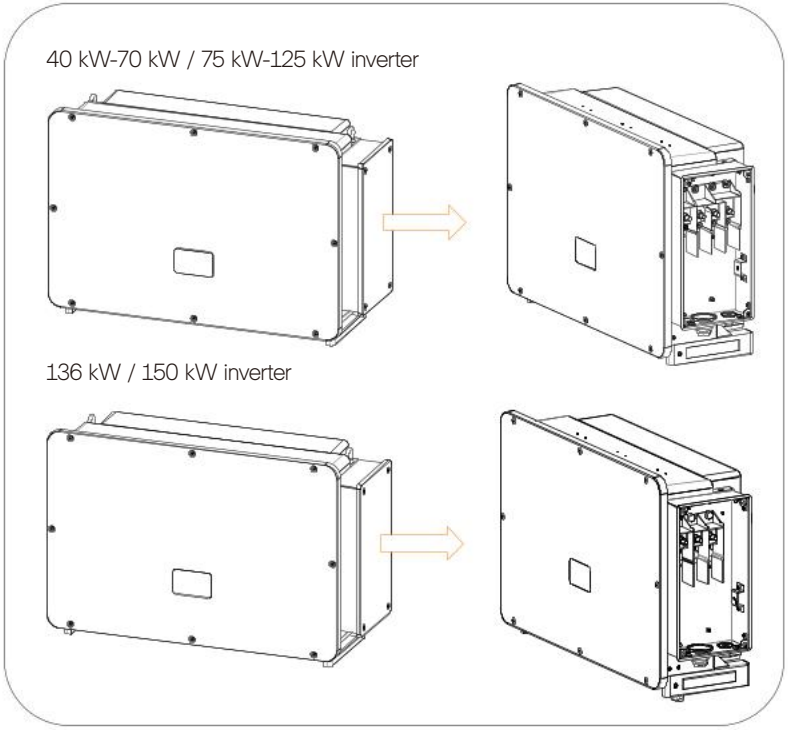

➢ Step 2: Connect the AC cable to the inverter

a. Use a utility knife to cut out the pagoda type protection ring in accordance with the whole cable size, route the AC cable through the pagoda protection ring, and connect it to the AC terminals L1, L2, L3 and N in turn, and tighten it with torque wrench (with the torque of 25~30 N·m).

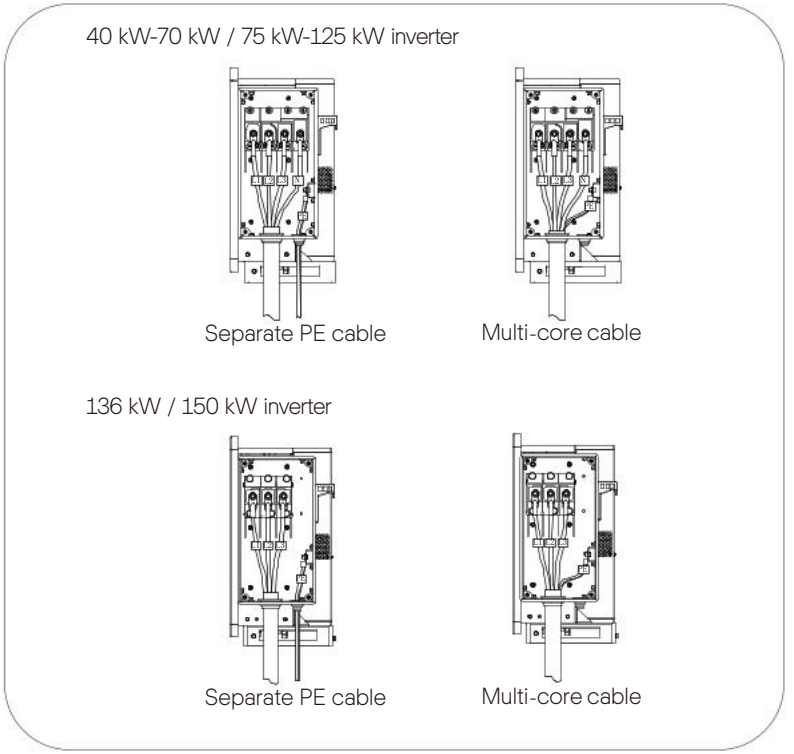

b. Re-install the cover of wiring box and tighten it with screws (with the torque of 5-7 N·m).

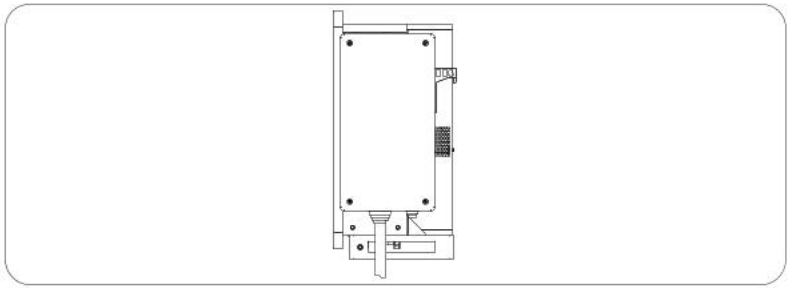

6.4 Communication Connection

6.4.1 Communication Signal Definition

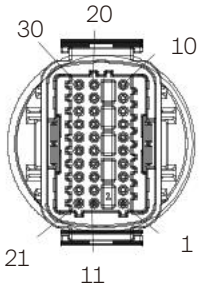

Port	Pin	Definition	Remark
RS-485-1	1	RS485A IN+	Inverter RS485 networking or connect the data collector
	2	RS485B IN-	
	3	RS485 IN-GND	
	4	RS485A OUT+	
	5	RS485B OUT-	
	6	RS485 OUT-GND	
RS-485-2	7	RS485A METER	Connect the RS485 meter or other devices de
	8	RS485B METER	
	9	V+5V	
	10	COM_GND	
DRM	11	DRM1/5	Reserved for DRM/RRCR
	12	DRM2/6	
	13	DRM3/7	
	14	DRM4/8	
	15	RG/0	
	16	CL/0	
DI	21	Digital IN+	Input digital signal
	22	Digital IN-	
DO	29	Digital OUT+	Output digital signal
	30	Digital OUT-	

6.4.2 Connection Steps of Communication Cable

a. Find out the communication connector (part A) from the accessory box and disassemble it into the following parts.

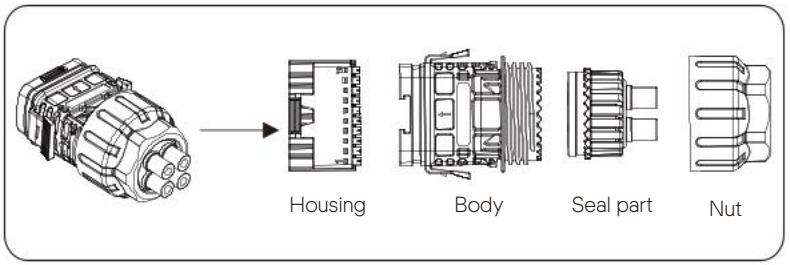

b. Select 0.5-0.75 mm^2 conductor and use wire stripper to strip 12-14 mm insulation layer of the cable end and insert the insulated cord end terminal to the cable end. (ENY0512 nylon terminal for 0.5 mm²/22 AWG conductor; ENY7512 nylon terminal for 0.75 mm²/20 AWG conductor)

c. Use crimping tool to make the terminal in firm contact with the cable end.

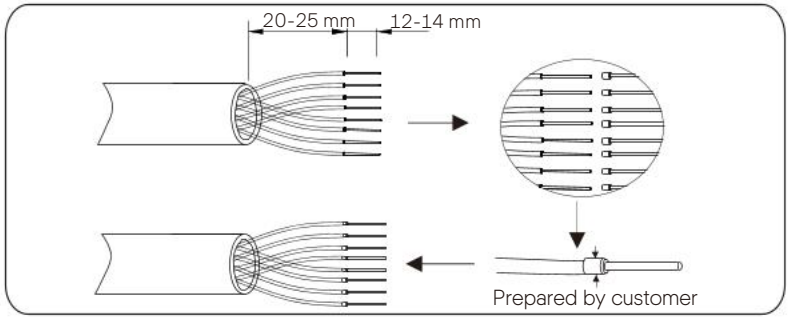

d. Set the nut, claw, seal body, seal ring and body on the communication cable in turn.

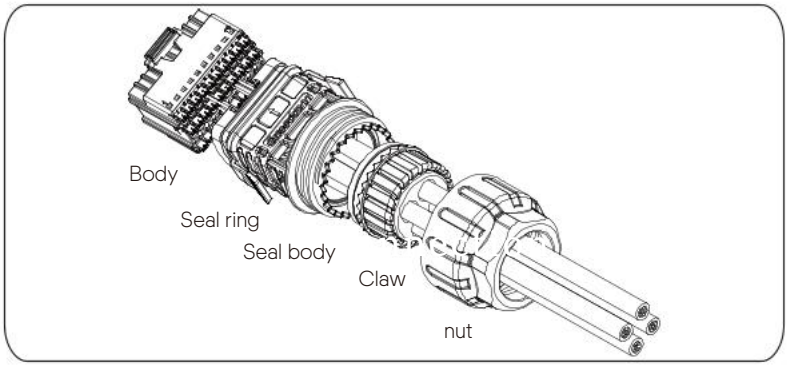

e. Insert the tube type terminal into the housing according to the label on it. Push the terminal-inserted housing into the body. There will be a slight sound of “Click”, which indicates the connection is completed.

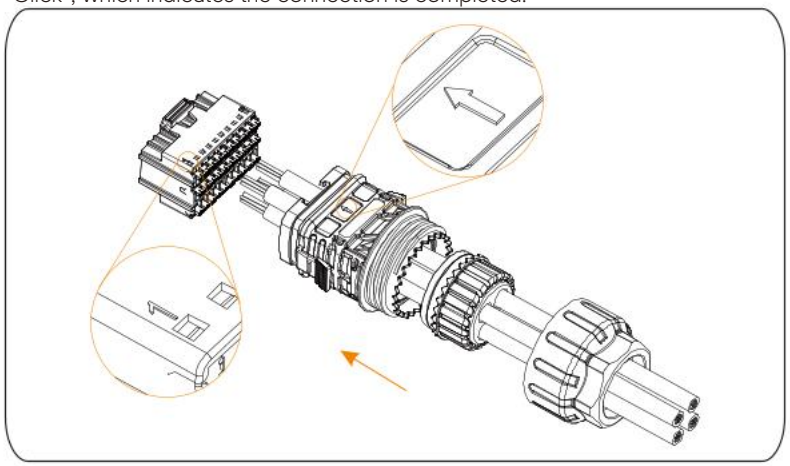

f. Push the seal body into seal ring, then push the claw.

g. Clockwise tighten the nut with torque 8+/-2 N·m.

h. Keep the buttons on both sides pressed and connect it to the COM port of the inverter. There will be a slight sound of “Click” if it is correctly connected.

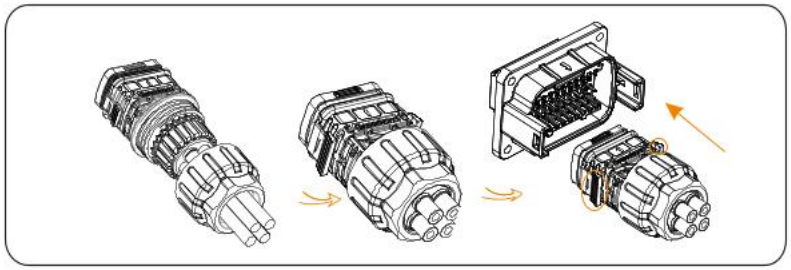

6.4.3 Release Steps of Communication Cable

For releasing the communication cable, please keep the buttons on the two sides pressed and pull out the cable to make it unlocked.

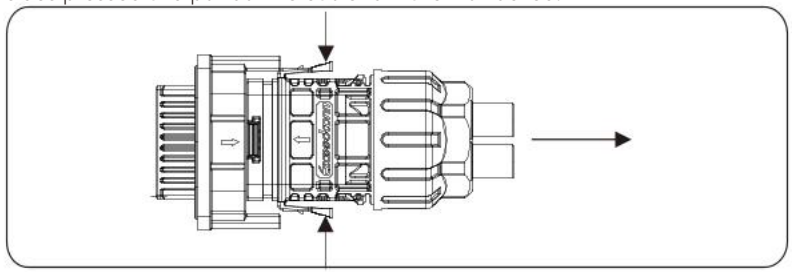

6.5 Parallel Connection

6.5.1 Datahub Parallel Connection

The series inverter provides the parallel connection function when connected with Datahub, which could support at most 60 inverters to parallel in one system and can control zero injection to the grid with a meter installed in the main circuit. In this parallel system, the Datahub will be the master of the system, and all the inverters are the slaves. The Datahub can communicate with all the slave inverters.

Diagram: Parallel system with Datahub

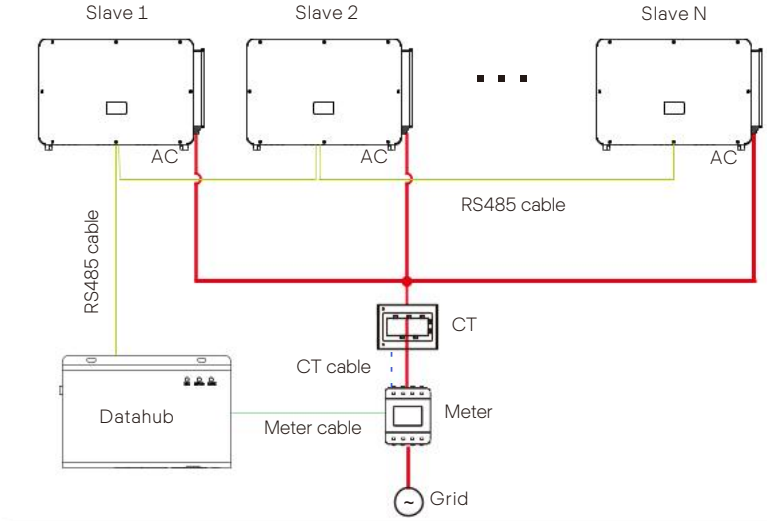

Note!

Before operation, please make sure that the inverters meet the following conditions:

1. All the inverters are recommended to be the same series;
2. The firmware version of all inverters shall be the same. Otherwise, the parallel function cannot be used.
3. Ensure the RS485 cable length is less than 200 m.

Note!

Before connecting the Datahub to the parallel system, please check that the inverters' settings meet the following conditions:

1. The “Modbus Fuction” should be “COM485”.
2. Set “Automatically add device” function, Datalub will distribute Modbus address to devices automatically and add these devices..

- Wiring operation

a) Connect one end of an RS485 communication cable with Datahub, and the other end with one of the slave inverters.
b) Connect all the slave inverters with each other with RS485 cables.
c) Connect the meter with the Datahub and the mains.

For the details, please refer to the user manual of Datahub.

6.5.2 Modbus Parallel Connection

The device offers Datahub parallel connection as well as master-slave parallel connection for up to 10 machines, with one serving as the master and the others as slaves. A 485 communication wire must be attached directly to the inverter. The devices are connected in a daisy chain type connection mode. The Master's RS485-2 is connected to the electricity meter, and the Master and slave are connected to the RS485 1 port.
The bus topology is shown as follows.Thebus topology is sho

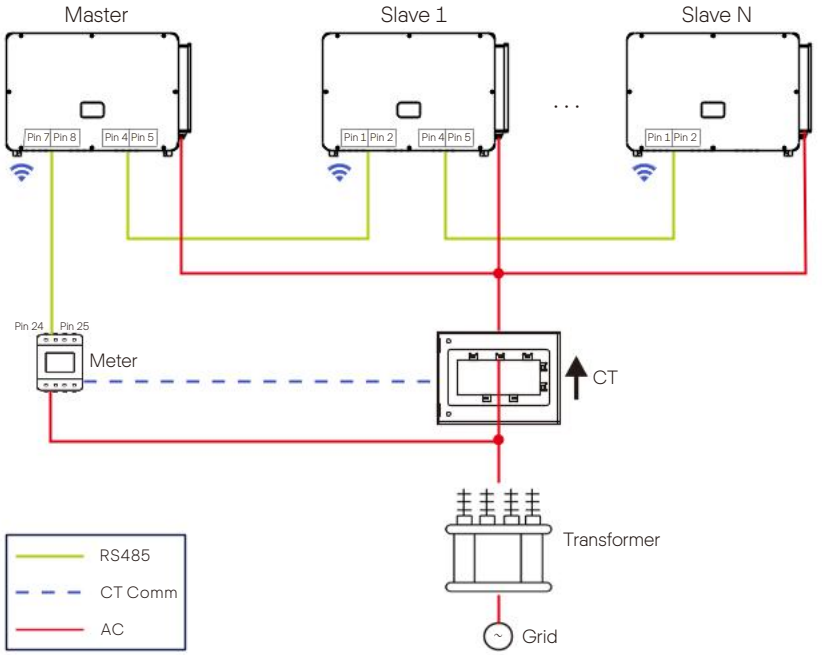

The interconnection between the host and slave is made by Pins 1, 2, 4, 5, and Pins 7, 8, which are connected to the electricity meter.

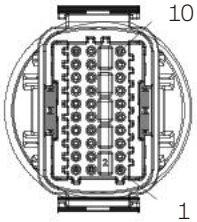

Port	Pin	Definition
RS-485-1	1	RS485A IN+
	2	RS485B IN-
	4	RS485A OUT+
	5	RS485B OUT-
RS-485-2	7	RS485A METER
	8	RS485B METER

6.6 Control the Output Power by Connecting a Radio Ripple Control Receiver (RRCR)

The inverter can be connected to a RRCR (Radio Ripple Control Receiver) in order to dynamically control the output power of all the inverters.
Users can control and limit the active power on the LCD by setting the active power limitation, which is a fixed power limit as a percentage, i.e. 0%, 30%, 60% and 100%.
Connection:
Connect the RRCR directly to the inverter communication board through the DRM.
The following table describes the connector pin assignment and functionality:

NOTE!
The DRM and RRCR ports can be shared..

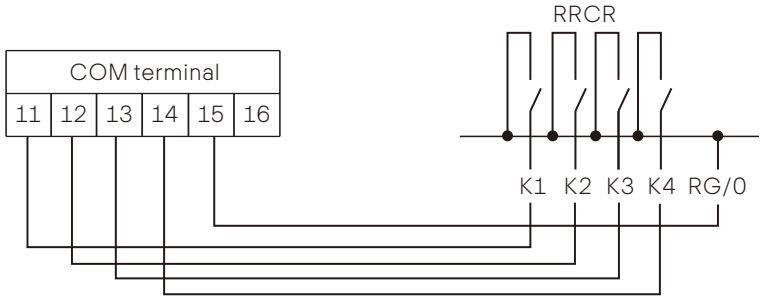

Port	Pin	Definition	Description	Connect to RRCR
DRM/RRCR	11	DRM1/5	Input 1	K1 - Relay 1 output
	12	DRM2/6	Input 2	K2 - Relay 2 output
	13	DRM3/7	Input 3	K3 - Relay 3 output
	14	DRM4/8	Input 4	K4 - Relay 4 output
	15	RG/0	VCC	Relays common node

The inverter is preconfigured to the following RRCR power levels:

COM port Pin 11	COM port Pin 12	COM port Pin 13	COM port Pin 14	Active power	Cos(ϕ)
Short circuit with RG/0	/	/	/	0%	1
/	Short circuit with RG/0	/	/	30%	1
/	/	Short circuit with RG/0	/	60%	1
/	/	/	Short circuit with RG/0	100%	1

To set the fixed power control:

Enter “Active Power” page, choose “Enable” to activate the function.

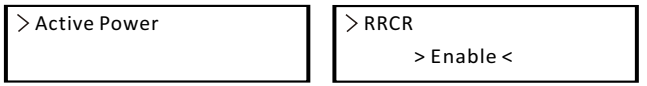

in the "RRCR" page. RRCR1 2. 3, 4 can be set for the corresponding values 0%, 30%, 60%, and 100% by default. Users can also configure these values as needed.
The values correspond to varied AC output power. For example, the 30% is in accordance with the rated power output of 30%.

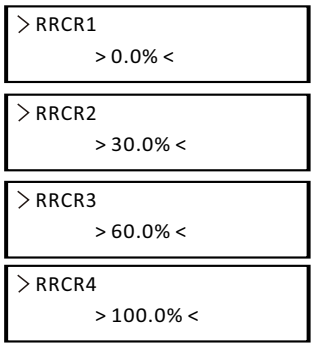

6.7 Monitoring Connection

Monitoring Cloud is an application that can communicate with the inverter via Wi-Fi/LAN/4G. It can realize alarm queries, parameter configuration, daily maintenance and other functions. This is a convenient maintenance platform.

Plug Dongle into “USB” port at the bottom of the inverter. After the DC side or AC side is powered on, the APP and inverter can be connected. Please refer to the corresponding manual for details.

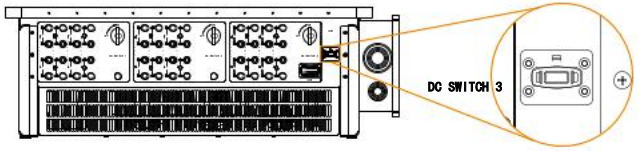

➢ Wi-Fi connection

Wi-Fi dongle connects to a local network to enable access to the Monitoring Cloud platform.

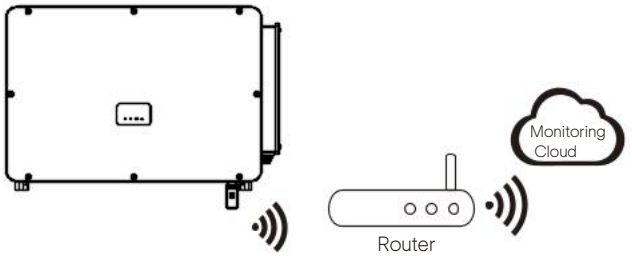

➢ LAN connection

If Wi-Fi isn’t suitable, the LAN dongle enables users to connect to the network via an ethernet cable. Ethernet allows for a much more stable connection with less interference.

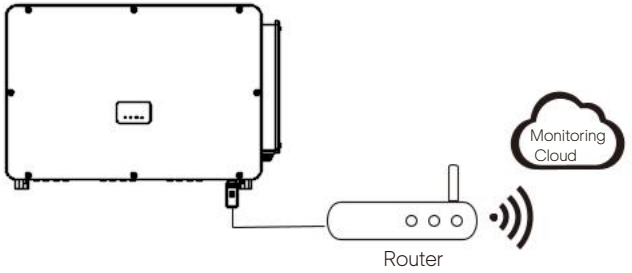

➢ 4G connection

4G dongle allows you to use a 4G connection to monitor your system without the option of connecting to a local network. (This product is not available in the UK)

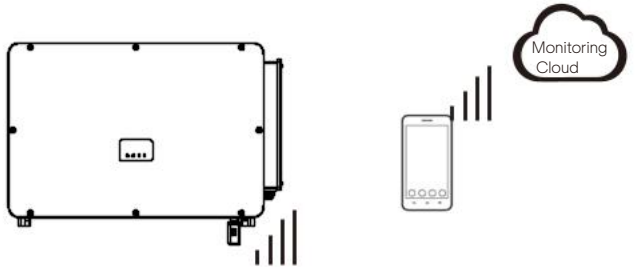

APP Setting

Scan the QR code to download SolaXCloud App. Create a new account and follow the tutorial on the SolaXCloud APP or the App guide at https://www.solaxcloud.com/ to set the WiFi configuration.

Touch the Inverter icon and you can add new inverter in the site page, and check details out in the Inverter section of this guide.



➢ The users can also set up the inverter remotely by downloading the SolaXCloud APP. The default site information will be shown after the end user logs in. The power and energy data displayed on this page is a synthesis of all the chosen inverter data contained in this site. Select or create a new site, and then the user can add and set up the inverter at the site.

Or the user can scan the QR code to watch the WiFi configuration video on YouTube, and study how to set the inverter.

7 Start the Inverter

● After the inverter is checked, then conduct the following steps:

a) Check that device is fixed well on the wall or stand.
b) Make sure all ground cables are properly connected.
c) Make sure all the DC breakers and AC breakers are disconnected.
d) AC cable is connected to grid correctly.
e) All PV panels are connected to inverter correctly, and unused PV terminals are sealed with PV dustproof buckle.
f) Turn on the DC switch to the “On”position.

● Start the inverter

Turn on the AC switch between the inverter and the power grid.
Turn on the DC switch between the PV string and the inverter if there is any.
Turn on the DC switch at the bottom of the inverter.
Inverter will start automatically when PV panels generate enough energy.
Check the status of LED indicators and LCD screen, the LED indicators should be blue and the LCD screen should display the main interface.

For the inverter with LED indicators:
If the LED indicator is not on, please check the below:
- All the connections are right.
- All the external circuit breakers are closed.
- The DC switch of the inverter is in the “ON” position.

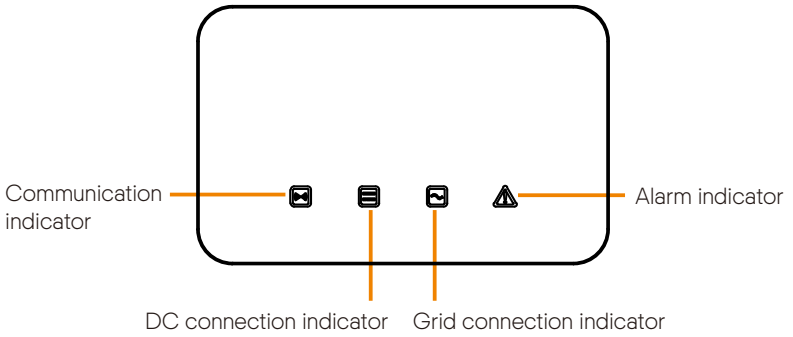

LED	Indicator status	Indicator status definition
Communication signal indicator (blue)	Always light on	The inverter communication is normal.
	Flashing	No communication data is sent or received for a long time.
DC side signal indicator (green)	Always light on	The inverter is in grid-connected state.
	Flashing	If the fault signal light is on, it indicates errors occur on the inverter DC side. If the fault signal light is off, it indicates no errors occur on the inverter DC side and at least one channel of MPPT input voltage is higher than 200 V.
	Always light off	The input voltage of all channels of MPPT is less than 200 V; Or DC switch is not turned on.
Grid connection indicator (green)	Always light on	The inverter is in grid-connected state.
	Flashing	If the fault signal indicator is on, it indicates errors occur on inverter AC side; If the fault signal indicator is off, AC grid is connected and the inverter is not in grid-connected state.
	Always light off	The inverter is not connected to the grid;
Inverter fault indicator (Red)	Always light on	The inverter is faulty
	Flashing	The inverter prompts warning
	Always light off	The inverter is currently in a normal state, and there is no fault.

Note:
1 When the inverter is in software upgrading state, all the indicators are blinking by horse-racing LED in circle;
2 When the inverter upgrade fails, other three indicators will be off except the inverter fault indicator (Red);
3 After the inverter upgrade succeeded, all the indicators will be off;
4 When the inverter is in the aging mode, the inverter fault indicator (Red) is flashing and other indicators keep the current state.

For the inverter with LCD screen:

Below is the three different states when operating, which means inverter starting up successfully.

Waiting: Inverter is waiting before checking when DC input voltage from panels is
greater than 160 V (lowest start-up voltage) but less than 200 V (lowest operating voltage).

Checking: Inverter will check DC input environment automatically when DC input voltage from the PV panels exceeds 200 V and PV panels have enough energy to start inverter.

Normal: Inverter begins to operate normally, meanwhile the LCD displays the main interface. Enter the setting interface to set the parameters when it is the first time to start up.

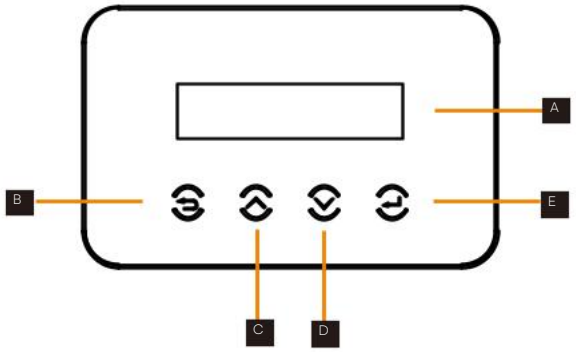

Object	Name	Description
A	LCD Screen	Display the information of the inverter.
B	ESC key	Return to the previous interface or cancel the setting
C	Up key	Move the cursor up or increase the setting value.
D	Down key	Move the cursor down or decrease the setting value.
E	Enter key	Enter the selected interface or confirm the setting.

8 Firmware Upgrading

● Upgrade preparation

1) Prepare a U disk (USB 2.0 / USB 3.0);

CAUTION!
Please make sure that the format is FAT or FAT 32, up to 32G.

2) Contact our service support to get the update files (“*.bin” and “*.txt” file), and store the two files in the root path of the U disk.

Files:
FORTH_Vxxx.xx.bin
UpdateConfig.txt

CAUTION!
The bin name listed in the “*.txt” file must be same as the “*.bin” name.

● Upgrade steps

USB disk can be plugged when the inverter is in normal status.

1) Plug the U disk into the upgrading port below: If the Wi-Fi dongle is connected to the port, please remove the dongle first.

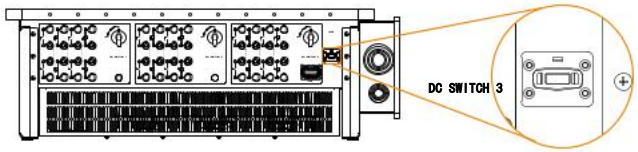

NOTE!
After U disk plug in, the four indicator lights will be blinking in turn. (Communication indicator: blue; DC connection indicator: green; Grid connection indicator: green; Alarm indicator: Red)

2) Wait approximately 15 seconds. The system will start upgrading when the four indicator lights turn off and the buzzer starts buzzing.

3) When the buzzer stops buzzing and the indicator lights start blinking again, it means that ARM program is upgraded successfully. And then the system will start other programs by upgrading.

If upgrading succeeds, the communication indicator (blue) turns off and other indicators are on;

If upgrading fails, only alarm indicator (red) is on. Please contact our service support for solutions.

NOTE!
After upgrading finished, the current state of indicator will be kept for 1 min and the inverter will be switched on automatically.

9 Setting for Inverter with LCD

RootMenu

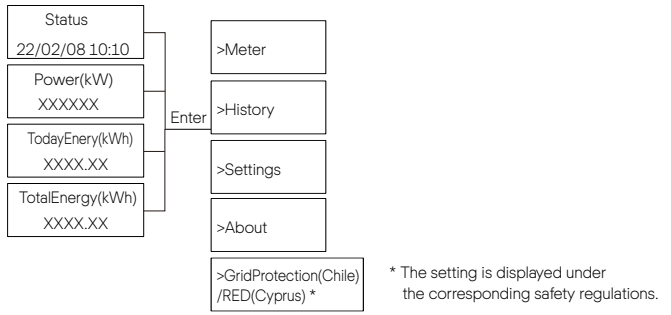

Status

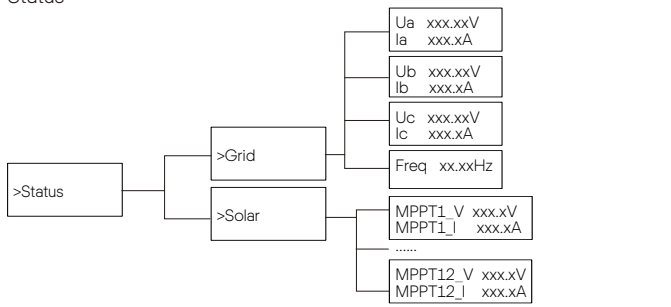

Meter

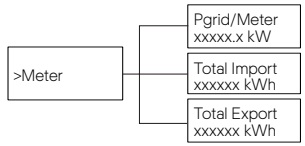

History

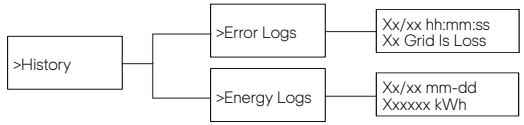

Setting



About

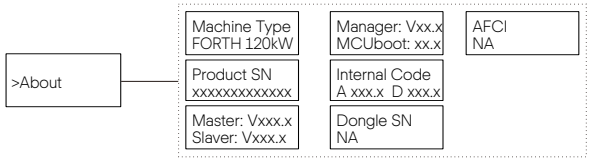

GridProtection(Chile)/RED(Cyprus)

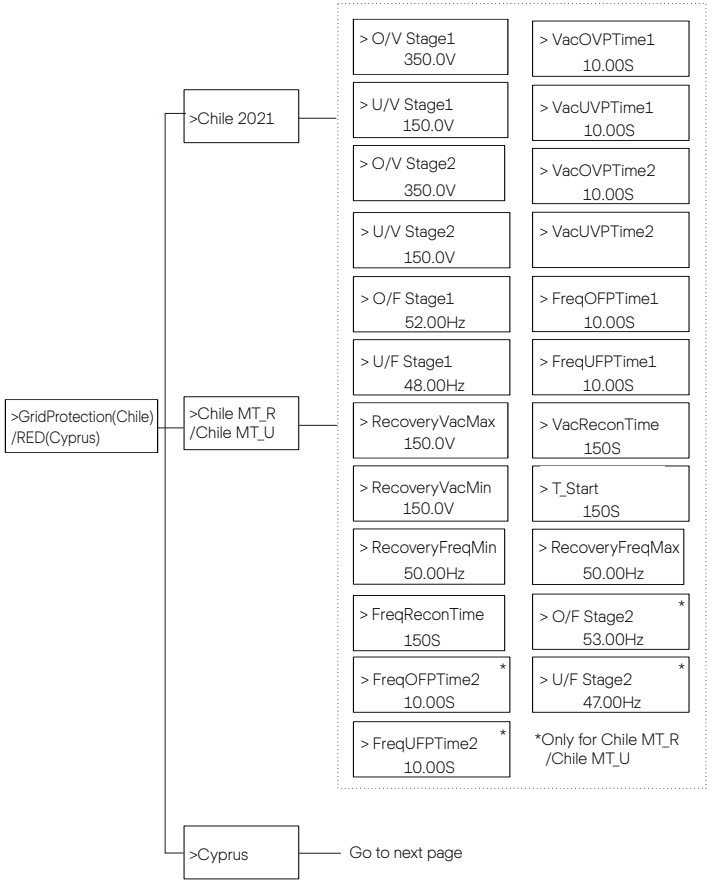

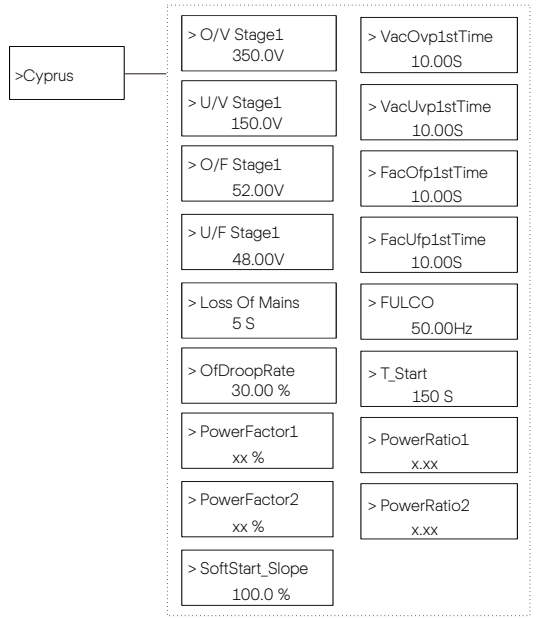

SettingMenu

- Password:
- 0000 for end-users and get the installer password from the dealer.

password == 0000

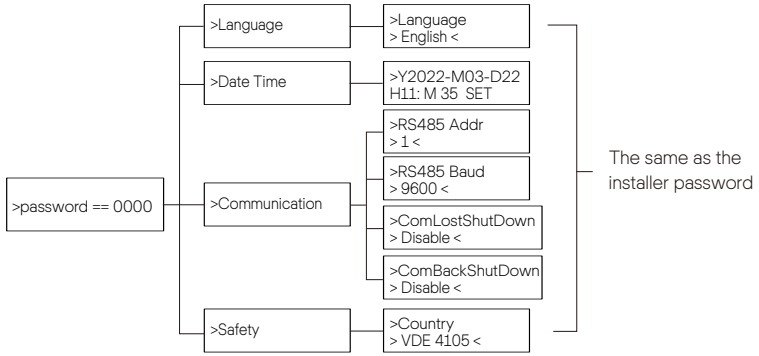

installer password

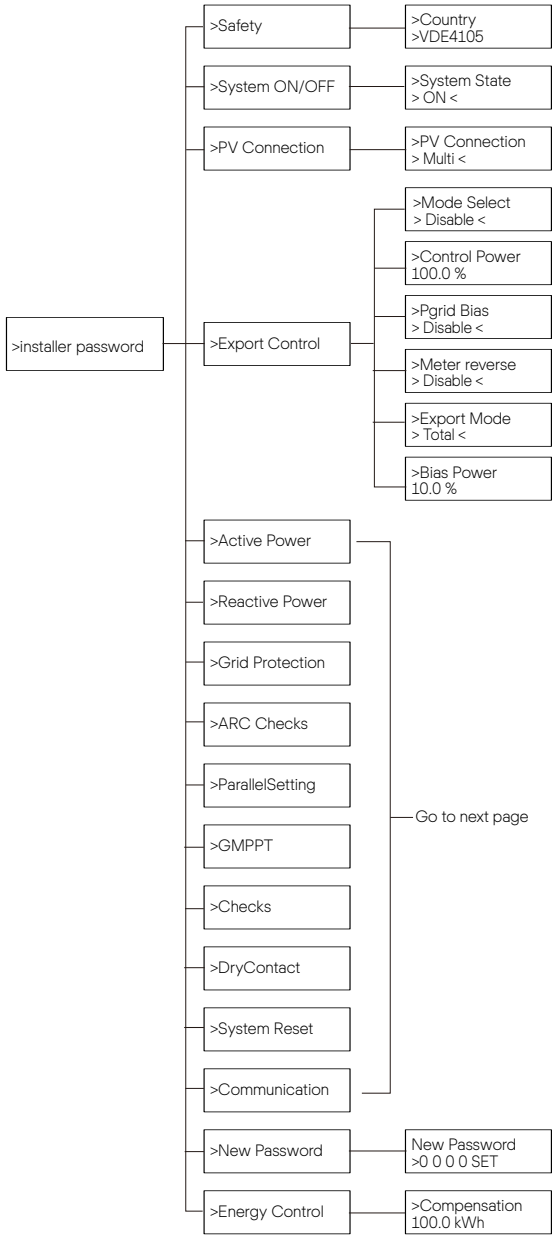

Active Power

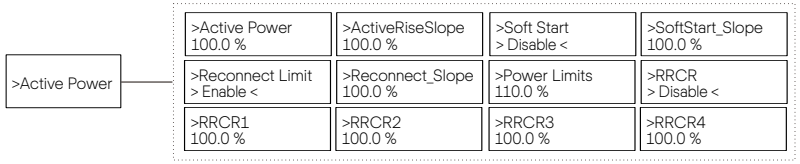

Reactive Power

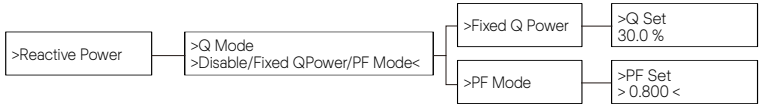

Grid Protection

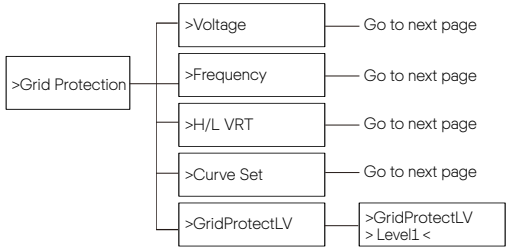

ARC Checks

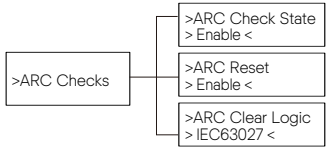

ParallelSetting

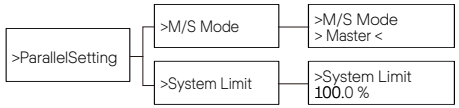

GMPPT

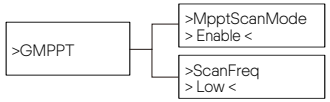

Checks

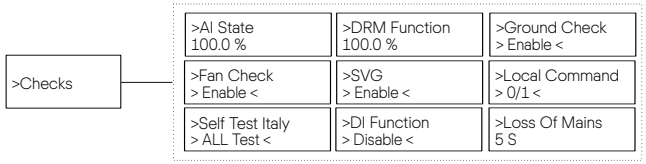

DryContact

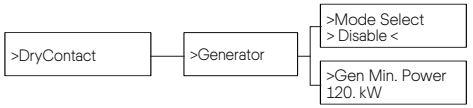

System Reset

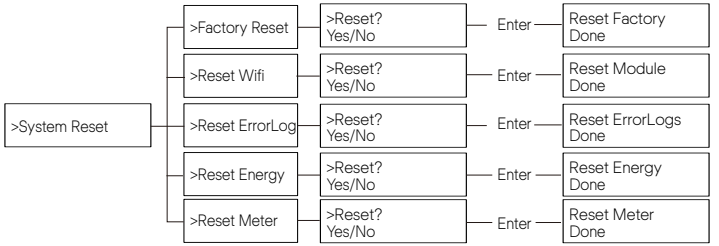

Communication

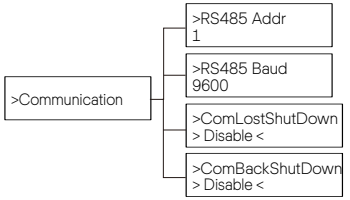

Grid Protection

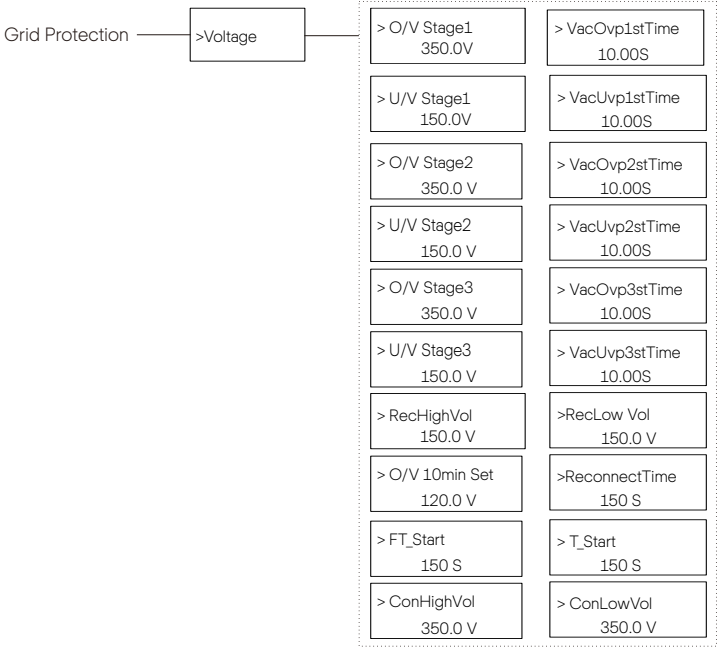

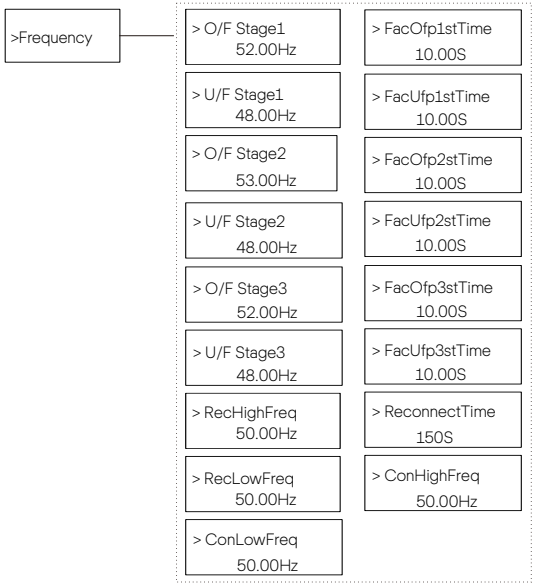

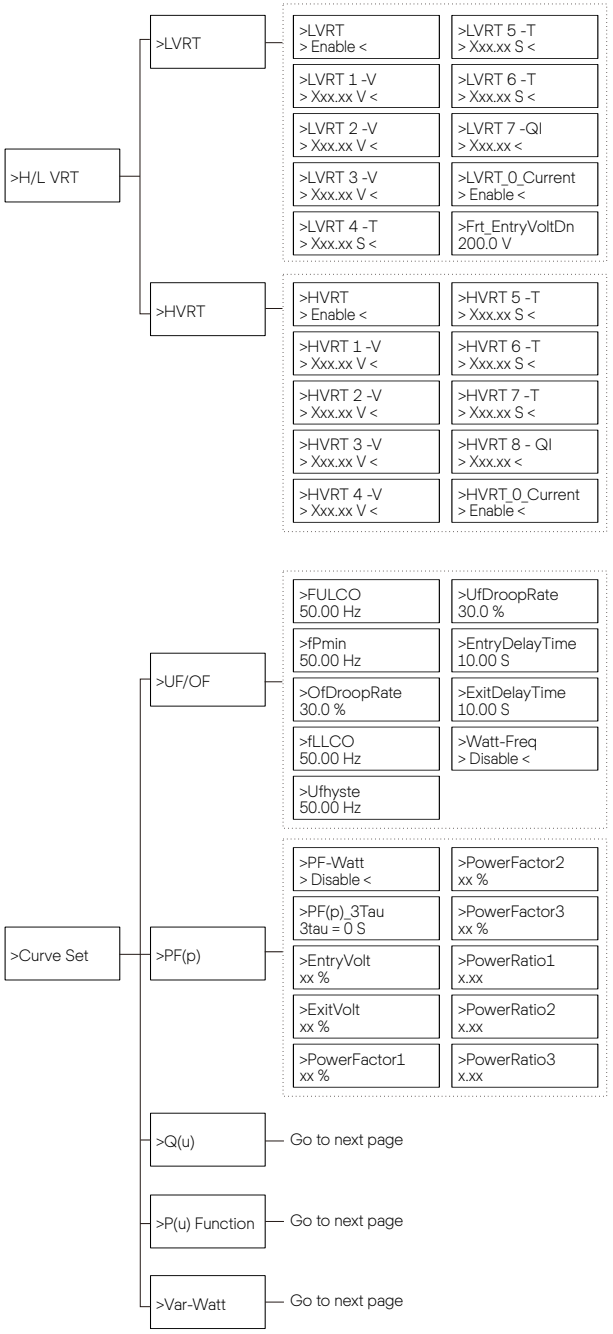
>H/L VRT
>LVRT
>LVRT
> Enable <
>LVRT 1 -V
> Xxx.xx V <
>LVRT 2 -V
> Xxx.xx V <
>LVRT 3 -V
> Xxx.xx V <
>LVRT 4 -T
> Xxx.xx S <
>LVRT 5 -T
> Xxx.xx S <
>LVRT 6 -T
> Xxx.xx S <
>LVRT 7 -QI
> Xxx.xx <
>LVRT_0_Current
> Enable <
>Frt_EntryVoltDn
200.0 V
>HVRT
>HVRT
> Enable <
>HVRT 1 -V
> Xxx.xx V <
>HVRT 2 -V
> Xxx.xx V <
>HVRT 3 -V
> Xxx.xx V <
>HVRT 4 -V
> Xxx.xx V <
>HVRT 5 -T
> Xxx.xx S <
>HVRT 6 -T
> Xxx.xx S <
>HVRT 7 -T
> Xxx.xx S <
>HVRT 8 - QI
> Xxx.xx <
>HVRT_0_Current
> Enable <
>Curve Set
>UF/OF
>FULCO
50.00 Hz
>fPmin
50.00 Hz
>OfDroopRate
30.0 %
>fLLCO
50.00 Hz
>Ufhyste
50.00 Hz
>UfDroopRate
30.0 %
>EntryDelayTime
10.00 S
>ExitDelayTime
10.00 S
>Watt-Freq
> Disable <
>PF(p)
>PF-Watt
> Disable <
>PF(p)_3Tau
3tau = 0 S
>EntryVolt
xx %
>ExitVolt
xx %
>PowerFactor1
xx %
>PowerFactor2
xx %
>PowerFactor3
xx %
>PowerRatio1
x.xx
>PowerRatio2
x.xx
>PowerRatio3
x.xx
>Q(u)
Go to next page
>P(u) Function
Go to next page
>Var-Watt
Go to next page

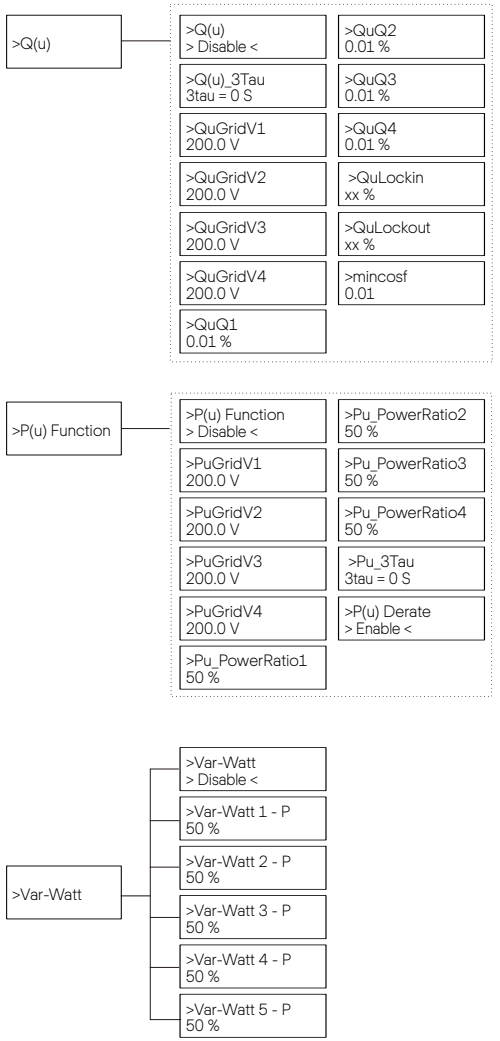
>Q(u)
>Q(u)
> Disable <
>Q(u)_3Tau
3tau = 0 S
>QuGridV1
200.0 V
>QuGridV2
200.0 V
>QuGridV3
200.0 V
>QuGridV4
200.0 V
>QuQ1
0.01 %
>QuQ2
0.01 %
>QuQ3
0.01 %
>QuQ4
0.01 %
>QuLockin
xx %
>QuLockout
xx %
>mincosf
0.01
>P(u) Function
>P(u) Function
> Disable <
>PuGridV1
200.0 V
>PuGridV2
200.0 V
>PuGridV3
200.0 V
>PuGridV4
200.0 V
>Pu_PowerRatio1
50 %
>Pu_PowerRatio2
50 %
>Pu_PowerRatio3
50 %
>Pu_PowerRatio4
50 %
>Pu_3Tau
3tau = 0 S
>P(u) Derate
> Enable <
>Var-Watt
>Var-Watt
> Disable <
>Var-Watt 1 - P
50 %
>Var-Watt 2 - P
50 %
>Var-Watt 3 - P
50 %
>Var-Watt 4 - P
50 %
>Var-Watt 5 - P
50 %

➢ LCD Digital Display

The main interface (Level 1) is the default interface, the inverter will automatically jump to this interface when the system started up successfully or not operated for a period of time.

“Status” shows the time and the current status “Waiting”, “Checking”, “Running”, “Fault” and “Upgrading”; “Power” means the timely output power; “TodayEnergy” means the power generated within the day; “TotalEnergy” means the power generated until now. Press ”Up“ and “Down” to review the information.

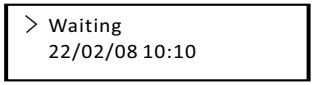

➢ Menu interface

The menu interface (Level 2) is a transfer interface for the user to get into other interface to change the setting or obtain the information.

-User can get into this interface by pressing “Enter” key when LCD displays the main interface.

-User can select “Up” and “Down” key, and press “Enter” to confirm the selection.



• Status

The status function contains “Grid” and “Solar”.

Press ”Up“ and “Down” to select and press “Enter” to confirm the selection, press “ESC” to return to menu.

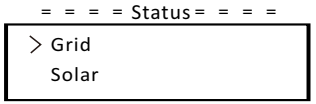

a) Grid

This status shows the current grid condition such as voltage, current, and output power, etc. Pout measures the output of the inverter; Pgrid means active power; Qout means reactive power; Sout means the apparent power.

Press ”Up“ and “Down” button to review the parameter, press “ESC” to return to Status .

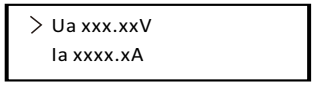

b) Solar

This interface shows the input current of PV. Totally up to 12 strings of MPPT current and voltage can be checked for the inverter.

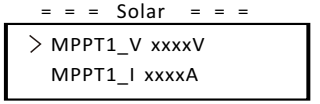

• Meter

The user can check the import and export energy by this function. There are three parameters: “Pgrid/Meter”, “Total Import” and “Total Export”. Press “Up” and “Down” to review the values. If no meter is connected, the parameters here will display 0.

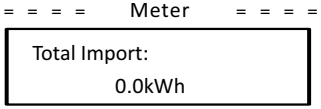

• History

History contains error logs and energy logs.

The Error log contains error information happened. It can record six items at most. Press ”Up“ and “Down” button to review parameter. Press “ESC” to return to the main interface.

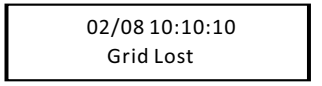

The Energy log contains the energy generated within the day. Press ”Up“ and “Down” button to select the date to check the log recorded on that day.

Press “ESC” to return to the main interface.

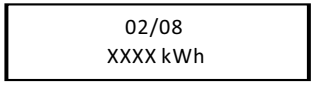

• Settings

Setting function is used for setting the inverter for safety, system on/off, PV connection mode, etc. To set the parameter, please input the password.

For users, the default password is “0000", which allows the user to review and modify “Language”, “Date Time”, “Communication” and “Safety”.

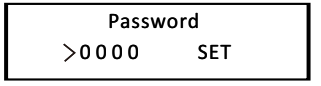

a) Language

Here user can set the language. At present, English is only available for choosing.

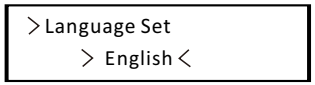

b) Date Time

This interface is for the user to set the system date and time. Increase or decrease the word by pressing “Up” or “Down” key. Press “Enter” to confirm and alternate to next word. After all the words are confirmed, select “SET” and press “Enter” to confirm the password.

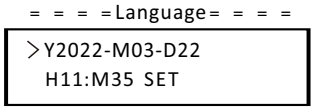

c) Communication

RS485 Addr: the modbus address of the external communication protocol.

RS485 Baud: The Baud rate of the external communication protocol. At present, 4800, 9600 and 19200 are supported, and the default is 9600.

With this function, the inverter can communicate with the computer, through which the operating status of the inverter can be monitored. When multiple inverters are monitored by one computer, RS485 communication addresses of different inverters need to be set.

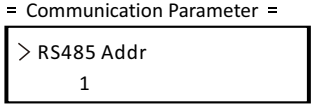

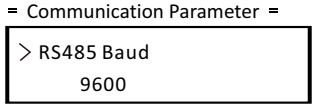

d) Safety

The user can only view the safety standard here.

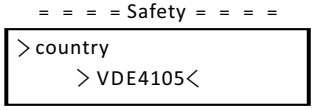

For installers, get the password from the dealer. It allows the installer to review and modify necessary settings complying to the local rules and regulations. If further advanced setting is required, please contact us or the distributor for assistance. Press “Enter to enter the password setting interface, press “up” and “Down” when it is flashing, then press “Enter” to confirm the set value. Finally, select “SET” and press “Enter” to confirm the password.

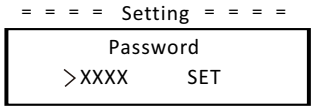

After inputting the password, the information of the LCD interface is shown as below.

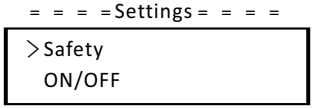

a) Safety

The installer can set the safety standard here according to different countries and grid tied standards. There are several standards for choice.

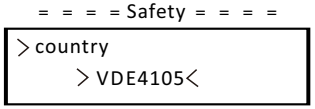

b) ON/OFF

“ON" means the inverter is in working state, and the inverter is in the default state.

"OFF" means that the inverter stops running and only the LCD screen is on.

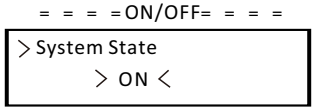

c) PV Connection

The user can select the PV connection type by this function.

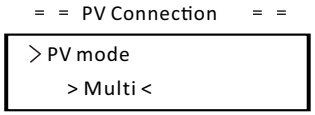

d) Export Control

With this power control function, the inverter can control the energy exported to the grid. The “Control Power” can be set by the installer. When you set 100% for control power, it means the energy can be exported to grid with full power. When you set 0%, Exporting to grid is limited. Please set the percentage according to the actual need.

Choose ”Disable” means the function will not be activated.

Press ”Up“ and “Down” button to select and press “Enter” to confirm it.

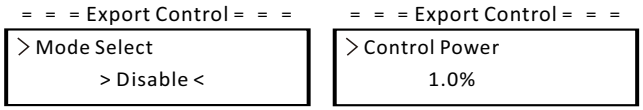

If the meter is connected reversely, please the enable “Meter reverse” function.

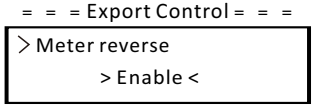

Installer can set “Soft Limit” and “Hard Limit” for export control.

e) Active power

This interface is used to set the reactive power according to the requirement of utility grid.

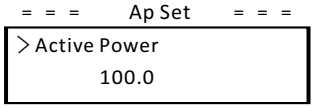

f) Reactive power

This interface is used to set the active power. Please set the value according to the requirement of utility grid.

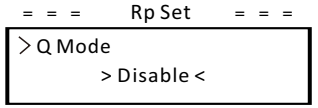

g) Grid Protection

Usually end user do not need to set the grid protection. All default value have been set before leaving factory according to safety rules.

If reset is needed, any changes should be made according to the requirements of local grid.

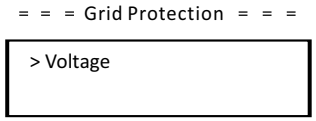

h) Checks

This interface is used to activate the needed functions, including “AI State”, “P(u) Derate”, “I-V Curve”, “MPPT Scan”, “ARC detection”, “ DRM”, etc. The users can input the default password to review and modify the functions above.

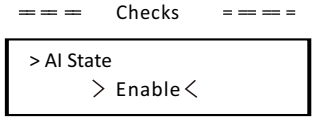

- I-V Curve Scan

Enable to check the current-voltage characteristic curve of the PV module, which in turn gives an indication of any abnormalities, and its degradation and health.

- DRM0

In Australia, enable to support local grid requirements, inverter can be shut down via remote control signal.

- RSD

Enable to rapidly shutdown the inverter when a potential hazard exists in the PV system, keeping the inverter and module installation environment within a safe voltage range.

- ARC checks
- Enable ARC check.



If the ARC reset is enabled after the alarm ARC fault shutdown, the fault will be automatically removed after a short period of time and the machine will resume; if it is not, the fault will always be there and must be fully disconnected from the power source in order to recover.

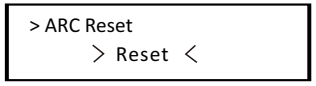

l) System

Here you can reset dongle, errorlogs, energylogs, and meter. In addition, restoring factory default setting is allowed.

Take “Reset Meter” as an example:

The user can clear the meter energy by this function. Press “Up” or “Down” button to select and press “Enter” to confirm it. (The user can select “Start” to reset meter if the user purchases our meter)

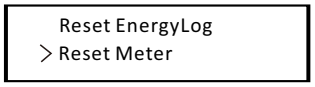

j) New Password
The user can set the new password here. Users need to increase or decrease the word by pressing “Up” or “Down” button. Press “Enter” to confirm and alternate to next word. After word is confirmed, Press “SET” and “Enter” to reset the password.

= = = =New Password= = = =

Password
>0000 SET

k) For Australia, there will be an option of “General Control” additionally. Here you can set the “Soft Limit” and “Hard Limit” for general control.

- About

This interface shows information of the inverter, include model, SN, software version of master DSP, slaver and ARM board and internal code.

= = = = About = = = =

Product Type
FORTH 120KW

l) Set parallel system with Modbus function
The devices are connected in a bus type connection mode. The Master's RS485-2 is connected to the electricity meter, and the Master and slave are connected to the RS485 1 port.

- Slave setup
- The slave device needs to set its Modbus address and baud rate. Set the Modbus address of the slave device on the power station to 2-11 (up to 10 machines are supported at present) and the baud rate to 9600.

= Communication Parameter =

> Modbus Addr
2

= Communication Parameter =

> Modbus Baud
9600

- Meter setup
- Set the Modbus address of the meter to 1 and the baud rate to 9600.
- Master setup
- The equipment connected to the meter is selected as the Master, and the Master mode and anti-reflux function of the Master equipment on the power station are enabled by APP/ web page/screen, among which System Limit are set to 100%.

=== Limit Set ====

> System Limit
> 100.0% <

10 Troubleshooting

10.1 Troubleshooting

This section contains information and procedures for solving possible problems with the inverters, and provides you with troubleshooting tips to identify and solve most problems that could occur with the the inverters.
This section will help you narrow down the source of any problems you may encounter. Please read the following troubleshooting steps.
Check warnings or fault messages on System Control Panel or Fault codes on the inverter information panel. If a message is displayed, record it before doing anything further.
Attempt the solution indicated in troubleshooting lists.

If your inverter's information panel is not displaying a Fault light, check the following list to make sure that the present state of the installation allows proper operation of the unit.

— Is the inverter located in a clean, dry, adequately ventilated place?
— Have the DC input breakers been opened?
— Are the cables adequately sized and short enough?
— Are the input and output connections and wiring in good condition?
— Are the configurations settings correct for your particular installation?
— Are the display panel and the communications cable properly connected and undamaged?

Contact our Customer Service for further assistance. Please be prepared to describe details of your system installation and provide model and serial number of the unit.

Code	Alarm Name	Descriptions and Diagnosis
IE 00	ISO_Fail	PV insulation impedance below safety value 1. Check the PV string impedance to ground, if there is a short circuit or insufficient insulation please rectify the short circuit point; 2. Check whether the protective earth wire of the inverter is correctly connected; 3. If there is no abnormality in the above two points, and the machine fault still exists, contact the installer.
IE 01	Meter_Oppsite	Incorrect meter direction 1. Confirm whether the current direction of the meter is correct; 2. Contact the installer.
IE 02	Remote_Off	The inverter receives the shutdown command and is in the shutdown state 1. Send the startup command through app or web to re-run the inverter; 2. Contact the installer.
IE 03	Freq_Cfg_Err	Grid rated frequency setting error 1. According to the local safety regulations, through the APP or monitoring website, reset the parameters; 2. Contact the installer.
IE 04	Gnd_Conn_Err	Inverter grounding fault 1. Check whether the Neutral line of the power grid is correctly connected; 2. Check whether the inverter ground wire is correctly connected; 3. Try to re-run the inverter; 4. Contact the installer;
IE 11	PV01_Reverse	Reversed PV connection on MPPT1 (PV01-PV12 respectively represent the PV input channel 1-12) 1. Check whether the positive and negative polarity of the string is reversed, if so, wait until the current of the PV string is reduced to below 0.5A, then put the "DC SWITCH" in the "OFF" position and adjust the polarity of the string; 2. If there is no abnormality in the string check, and the fault still exists, contact the installer.
IE 20	PV_VolHigh	PV input voltage is higher than the allowable value (PV1-PV12 respectively represents 1-12 PV overvoltage) 1. Check the string configuration, reduce the number of PV modules in series, ensure that the open circuit voltage of the string does not exceed the specification requirements, and after the PV array is configured correctly, the inverter alarm will disappear automatically; 2. If the string configuration meets the requirements and the fault still exists, contact the installer.
IE 30	BST_SW_OCP	MPPT software overcurrent 1. The inverter detects the external working conditions in real time, the inverter will resume normal work after the fault disappears, no need for manual intervention; 2. If the faults occur frequently and affect the normal power generation of the plant, please check whether the PV input is short-circuited, if it can't be solved, contact the installer.
IE 40	BST_HW_OCP	MPPT hardware overcurrent 1. The inverter detects the external working conditions in real time, the inverter will resume normal work after the fault disappears, no need for manual intervention; 2. If the faults occur frequently and affect the normal power generation of the plant, please check whether the PV input is short-circuited, if it can't be solved, contact the installer.

Code	Alarm Name	Descriptions and Diagnosis
IE 50	Grid_Loss	Power failure of power grid / disconnection of AC line or AC switch. 1. Check whether the grid voltage is normal; 2. Check the power grid electrical connection AC switch; 3. Try to restart the inverter.
IE 51	GridVol_OP1	The grid voltage exceeds the allowable value 1. check whether the voltage at the grid point is too high, if so, please contact the local power operator; 2. If it is confirmed that the voltage at the grid point is higher than the permitted range and with the consent of the local power operator, modify the over-voltage protection point through the mobile phone APP or monitoring website; 3. Contact the installer.
IE 53	GridVol_UP1	The grid voltage is lower than the allowable value 1. If it occurs occasionally, it may be a short time abnormality of the power grid, the inverter will return to normal operation after detecting the power grid is normal, no manual intervention is required; 2. If it occurs frequently, please check whether the grid voltage is within the permitted range, if not, please contact the local power operator. If yes, you also need to get the consent of the local power operator and then modify the grid voltage on the mobile phone APP or monitoring website to modify the grid undervoltage protection point; 3. Contact the installer.
IE 55	GridVol_OP_10M	The average grid voltage in 10 minutes exceeds the allowable value 1. Check whether the grid voltage is within the allowable range; 2. Try to re-run the inverter.
IE 56	GridVol_OP_INST	Instantaneous high voltage of power grid 1. If it occurs occasionally, it may be a short time abnormality of the power grid, the inverter will return to normal operation after detecting the power grid is normal, no manual intervention is required; 2. If it occurs frequently, please check whether the grid frequency is within the permitted range, if not, please contact the local power operator. If yes, you also need to contact the local power operator with the consent of the local power operator to modify the power frequency through the mobile phone APP or monitoring website. If yes, it is also necessary to modify the instantaneous over-voltage protection point of the power grid through the mobile phone APP or monitoring website with the consent of the local power operator; 3. Contact the installer
IE 57	GridFreq_OP1	Grid frequency exceeds allowable value 1. If it occurs occasionally, it may be a short time abnormality of the power grid, the inverter will return to normal operation after detecting the power grid is normal, no manual intervention is required; 2. If it appears frequently, please check whether the grid frequency is within the permitted range, if not, please contact the local power operator. If yes, you also need to modify the grid over-frequency protection point via mobile phone APP or monitoring website after getting the consent of local power operator; 3. Contact the installer.
IE 5A	GridFreq_UP1	The grid frequency is lower than the allowable value 1. If it occurs occasionally, it may be a short time abnormality of the power grid, the inverter will return to normal operation after detecting the power grid is normal, no manual intervention is required; 2. If it appears frequently, please check whether the grid frequency is within the permitted range, if not, please contact the local power operator. If yes, you also need to modify the grid over-frequency protection point via mobile phone APP or monitoring website after getting the consent of local power operator; 3. Contact the installer.

Code	Alarm Name	Descriptions and Diagnosis
IE 5B	GridPhase_Loss	Loss of grid phase voltage 1. Check the grid voltage; 2. Check the power grid electrical connection AC switch; 3. Try to re-run the inverter.
IE 5C	Grid_Unbalance	Grid voltage imbalance 1. Check whether the grid voltage is within the allowable range; 2. Try to re-run the inverter;
IE 5D	Grid_FRT	Grid fault 1. Check whether the grid voltage is within the allowable range; 2. Try to re-run the inverter;
IE 60	DCBus_HW_OVP	Bus hardware overvoltage 1. The inverter monitors the external working conditions in real time, and the inverter will resume normal operation after the fault disappears, without manual intervention; 2. If faults occur frequently, please contact the installer.
IE 61	PBus_FSW_OVP	Bus software overvoltage 1. The inverter monitors the external working conditions in real time, and the inverter will resume normal operation after the fault disappears, without manual intervention; 2. If faults occur frequently, please contact the installer.
IE 62	NBus_FSW_OVP	Bus software overvoltage 1. The inverter monitors the external working conditions in real time, and the inverter will resume normal operation after the fault disappears, without manual intervention; 2. If faults occur frequently, please contact the installer.
IE 63	DCBus_SW_OVP	Bus software overvoltage 1. The inverter monitors the external working conditions in real time, and the inverter will resume normal operation after the fault disappears, without manual intervention; 2. If faults occur frequently, please contact the installer.
IE 64	DCBus_SW_UVP	Bus software undervoltage 1. The inverter monitors the external working conditions in real time, and the inverter will resume normal operation after the fault disappears, without manual intervention; 2. If faults occur frequently, please contact the installer.
IE 65	DCBus_Unbalance	Bus imbalance 1. The inverter monitors the external working conditions in real time, and the inverter will resume normal operation after the fault disappears, without manual intervention; 2. If faults occur frequently, please contact the installer.
IE 66	PV_Above_Bus	The PV voltage is higher than the Bus voltage 1. The inverter monitors the external working conditions in real time, and the inverter will resume normal operation after the fault disappears, without manual intervention; 2. If faults occur frequently, please contact the installer.
IE 67	DcBus_SSErr	Bus soft start failure 1. The inverter monitors the external working conditions in real time, and the inverter will resume normal operation after the fault disappears, without manual intervention; 2. If faults occur frequently, please contact the installer.
IE 68	SunPWR_Weak	Low PV power 1. The inverter monitors the external working conditions in real time, and the inverter will resume normal operation after the fault disappears, without manual intervention; 2. If faults occur frequently, please contact the installer.

Code	Alarm Name	Descriptions and Diagnosis
IE 70	InvRelay_Err	Relay fault 1. The inverter monitors the external working conditions in real time, and the inverter will resume normal operation after the fault disappears, without manual intervention; 2. If faults occur frequently, please contact the installer.
IE 71	Relay_OnErr	Relay pull in fault 1. The inverter monitors the external working conditions in real time, and the inverter will resume normal operation after the fault disappears, without manual intervention; 2. If faults occur frequently, please contact the installer.
IE 72	Inv_SW_OCP	Inverter software overcurrent 1. The inverter monitors the external working conditions in real time, and the inverter will resume normal operation after the fault disappears, without manual intervention; 2. If faults occur frequently, please contact the installer.
IE 73	Inv_PkCur_OL	Inverter peak overcurrent fault 1. The inverter monitors the external working conditions in real time, and the inverter will resume normal operation after the fault disappears, without manual intervention; 2. If faults occur frequently, please contact the installer.
IE 74	Inv_HW_OCP	Inverter hardware overcurrent 1. The inverter monitors the external working conditions in real time, and the inverter will resume normal operation after the fault disappears, without manual intervention; 2. If faults occur frequently, please contact the installer.
IE 75	Inv_DCI_Err	DCI exceeds allowable value 1. The inverter monitors the external working conditions in real time, and the inverter will resume normal operation after the fault disappears, without manual intervention; 2. If faults occur frequently, please contact the installer.
IE 76	Inv_SC_Err	Inverter peak overcurrent fault 1. The inverter monitors the external working conditions in real time, and the inverter will resume normal operation after the fault disappears, without manual intervention; 2. If faults occur frequently, please contact the installer.
IE 77	GFCI_CT_Err	GFCI sensor failure 1. The inverter monitors the external working conditions in real time, and the inverter will resume normal operation after the fault disappears, without manual intervention; 2. If faults occur frequently, please contact the installer.
IE 78	GFCI_Err	GFCI failure 1. The inverter monitors the external working conditions in real time, and the inverter will resume normal operation after the fault disappears, without manual intervention; 2. If faults occur frequently, please contact the installer.
IE 7B	Inv_HW_OCPA	Inverter hardware overcurrent fault 1. The inverter monitors the external working conditions in real time, and the inverter will resume normal operation after the fault disappears, without manual intervention; 2. If faults occur frequently, please contact the installer
IE 80	Bst_IGBT_NTC_OTP	Boost module temperature above allowable value 1. Check if the inverter installation location is well ventilated and the ambient temperature is not beyond the maximum permissible ambient temperature range, if the ventilation is not good or the ambient temperature is too high, please improve the ventilation and heat dissipation condition; 2. If the ventilation is good and the ambient temperature is normal, but the inverter fault still exists, please contact the installer.

Code	Alarm Name	Descriptions and Diagnosis
IE 81	Inv_IGBT_NTC_OTP	The temperature of inverter module is higher than the allowable value 1. Check if the inverter installation location is well ventilated and the ambient temperature is not beyond the maximum permissible ambient temperature range, if the ventilation is not good or the ambient temperature is too high, please improve the ventilation and heat dissipation condition; 2. If the ventilation is good and the ambient temperature is normal, but the inverter fault still exists, please contact the installer.
IE 82	AC_TB_NTC_OTP	The AC terminal temperature is higher than the allowable value 1. Check if the inverter installation location is well ventilated and the ambient temperature is not beyond the maximum permissible ambient temperature range, if the ventilation is not good or the ambient temperature is too high, please improve the ventilation and heat dissipation condition; 2. If the ventilation is good and the ambient temperature is normal, but the inverter fault still exists, please contact the installer.
IE 83	Envir_Tmp_High	The internal temperature is higher than the allowable value 1. Check if the inverter installation location is well ventilated and the ambient temperature is not beyond the maximum permissible ambient temperature range, if the ventilation is not good or the ambient temperature is too high, please improve the ventilation and heat dissipation condition; 2. If the ventilation is good and the ambient temperature is normal, but the inverter fault still exists, please contact the installer.
IE 84	Envir_Tmp_Low	The internal temperature is lower than the allowable value 1. Check if the inverter installation location is well ventilated and the ambient temperature is not beyond the maximum permissible ambient temperature range, if the ventilation is not good or the ambient temperature is too high, please improve the ventilation and heat dissipation condition; 2. If the ventilation is good and the ambient temperature is normal, but the inverter fault still exists, please contact the installer.
IE 85	TmpSensor_Loss	Temperature sensor connection failure 1. Contact the installer to reconfigure the machine.
IE 91	Comm_SPI_Err	Internal SPI failure 1. If the abnormality is introduced by an external fault, the inverter automatically resumes normal operation after the fault disappears without manual intervention; 2. If this alarm occurs frequently, please contact the installer.
IE 92	Comm_CAN_Err	Internal CAN failure 1. If the abnormality is introduced by an external fault, the inverter automatically resumes normal operation after the fault disappears without manual intervention; 2. If this alarm occurs frequently, please contact the installer.
IE 93	EPRM_RW_Err	EEPROM fault 1. If the abnormality is introduced by an external fault, the inverter automatically resumes normal operation after the fault disappears without manual intervention; 2. If this alarm occurs frequently, please contact the installer.
IE 94	FAN1_Err	Fan 1 fault 1. If the abnormality is introduced by an external fault, the inverter automatically resumes normal operation after the fault disappears without manual intervention; 2. If this alarm occurs frequently, please contact the installer.

Code	Alarm Name	Descriptions and Diagnosis
IE 95	FAN2_Err	Fan 2 fault 1. If the abnormality is introduced by an external fault, the inverter automatically resumes normal operation after the fault disappears without manual intervention; 2. If this alarm occurs frequently, please contact the installer.
IE 96	MOV_AC_Err	AC lightning protection module failure 1. If the abnormality is introduced by an external fault, the inverter automatically resumes normal operation after the fault disappears without manual intervention; 2. If this alarm occurs frequently, please contact the installer.
IE 97	MOV_DC_Err	DC lightning protection module failure 1. If the abnormality is introduced by an external fault, the inverter automatically resumes normal operation after the fault disappears without manual intervention; 2. If this alarm occurs frequently, please contact the installer.
IE A0	Type_Model_Err	Model setting error 1. Contact the installer to reconfigure the machine.
IE A1	SW_VerMisMatch	Software version unmatched error 1. Contact the installer to reconfigure the machine.

10.2 Routine Maintenance

Inverters do not need any maintenance or correction in most condition, To ensure that the inverter can operate properly for a long term, you are advised to perform routine maintenance on it. Before cleaning the system, connecting cables, and maintaining the grounding reliability, power off the system.

• Fan Maintenance
The external fan of inverter is in operation for a long time. In order to keep the fan in normal working state, it is necessary to clean the fan regularly (it is recommended to clean it once a year).
If the service life is too long, the fan may fail, and the fan needs to be repaired or replaced. The maintenance or replacement requires professional operation.

Step 1. Before maintenance of fan, the AC connection must be disconnected, then the DC switch must be disconnected and wait 5 minutes till the inverter is completely OFF.
Step 2. Remove the fan support fixing screw as shown in the figure below.
Step 3. Pull out the fan bracket, stop at the position about 150 mm, then pull off the fan waterproof connector, then pull the fan bracket again to pull out the whole bracket.
Step 4. Clean, repair, or replace the fan.
Step 5. Restore the installation of fan bracket and tighten the fixing screws.

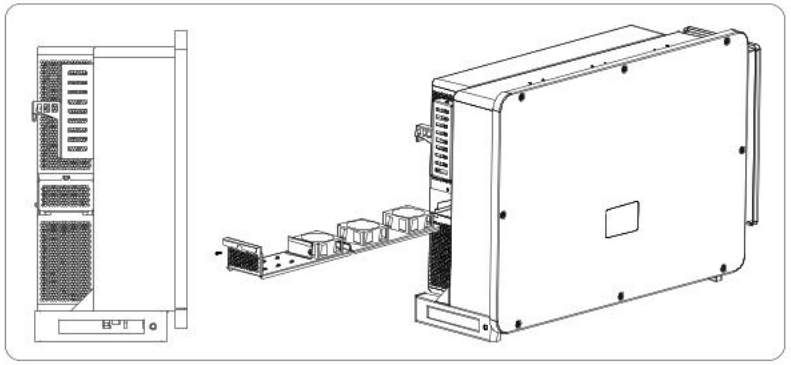

• Safety checks
Safety checks should be performed at least every 12 months by manufacturer's qualified person who has adequate training, kownledge, and practical experience
to perform these tests.The data should be recorded in an equipment log.If the device is not functioning properly or fails any of test, the device has to be repaired.For safety check details, refer to this manual, section 2 Safety instruction and EC Directives.

• Maintain periodically
Only qualified person may perform the following works.
During the process of using the inverter, the manage person shall examine and maintain the machine regularly. The concrete operations are follow.
1) Check that if the cooling fins on the rear of inverter are covered by dirts, and the machine should be cleaned and absorbed dust when necessary. This work shall be check from time to time.
2) Check that if the indicators of the inverter are in normal state, check if the display of the inverter (if it has screen) is normal. This check should be performed at least every 6 months.
3) Check that if the input and output wires are damaged or aged. This check should be performed at least every 6 months.
4) Check whether the ground terminal and ground cable are securely connected and all terminals and ports are properly sealed. This check should be performed at least every 6 months.
5) You should get the inverter panels cleaned and their safety checked at least every 6 months.

11 Decommissioning

11.1 Dismantling the Inverter

- Switch off the DC and AC switch/breaker and disconnect the inverter from DC Input and AC output.
- Wait for 5 minutes for de-energizing.
- Disconnect communication and optional connection wirings.
- Remove the inverter from the bracket.
  Remove the bracket if necessary.

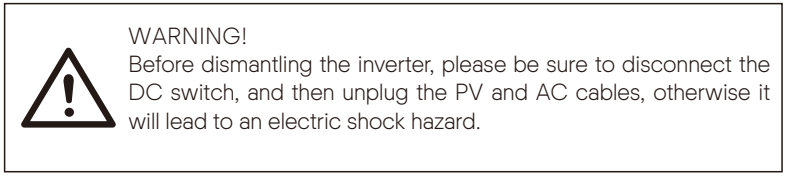

WARNING!
Before dismantling the inverter, please be sure to disconnect the DC switch, and then unplug the PV and AC cables, otherwise it will lead to an electric shock hazard.

11.2 Packaging

If possible, please pack the inverter with the original packaging.
If it is no longer available, you can also use an equivalent carton that meets the following requirements.
• Suitable for loads more than 92 kg.
• With handle.
• Can be fully closed.

11.3 Storage and Transportation

Store the inverter in dry place where ambient temperatures are always between
-25°C - +60°C. Take care of the inverter during the storage and transportation, keep less than 4 cartons in one stack.
When the inverter or other related components need to be disposed. Have it carried out according to local waste handling regulations. Please be sure to deliver wasted inverters and packing materials to certain site, which can assist relevant department to dispose and recycle.

11.4 Disposing of the inverter

If the inverter service life expires, dispose of it according to the local disposal rules for electrical equipment waste.

12 Disclaimer

The inverters shall be transported, used and operated under restricted conditions. We will not provide any service, technical support or compensation in case of the following circumstances, including but not limited to:
• The inverter is damaged by force majeure (such as earthquake, flooding, thunderstorm, lighting, fire hazard, volcanic eruption, etc.);
• The inverter's warranty is expired, but not extended;
• The inverter's SN, warranty card or invoice cannot be provided;
• The inverter is damaged by man-made cause;
• The inverter is used or operated against any items in local policy;
• The installation, configuration and commissioning of the inverter doesn't meet the requirements mentioned in this manual;
• The inverter is installed, refitted or operated in improper ways;
• The inverter is installed, operated under improper environment or electrical condition;
• The inverter is changed, updated or disassembled on hardware or software without authority from us;
• The communication protocol from other illegal channels is used; and
• The monitoring or control system is used without authority from us.
SolaX reserves the right for the final explanation.

Warranty Registration Form

For Customer (Compulsory)

Name _____ Country _____

Phone Number _____ Email _____

Address _____

State _____ Zip Code _____

Product Serial Number _____

Date of Commissioning _____

Installation Company Name _____

Installer Name _____ Electrician License No. _____

For Installer

Module (If Any)

Module Brand _____

Module Size(W) _____

Number of String _____ Number of Panel Per String _____

Battery (If Any)

Battery Type _____

Brand _____

Number of Battery Attached _____

Date of Delivery _____ Signature _____

Please visit our warranty website: https://www.solaxcloud.com/#/warranty to complete the online warranty registration or use your mobile phone to scan the QR code to register.

For more detailed warranty terms, please visit SolaX official website: www.solaxpower.com to check it.

614.00002.07

PLEASE REGISTER THE WARRANTY IMMEDIATELY AFTER INSTALLATION!
GET YOUR WARRANTY CERTIFICATE FROM SOLAX!
KEEP YOUR INVERTER ONLINE & WIN SOLAX POINTS!

1

Open your camera app and point your device at the QR code



2

Wait for the camera to recognize the QR code



3

Click banner or notification when it appears on the screen



4

Warranty registration page will be loaded automatically

