SILVERFOX

2218BN
Facial Chair

Welcome to use our products. A0
Please read the user manual carefully before using the products.
Our company reserves the right to improve design and modify the products without prior notice.

1. About This Manual

This manual shall only be used for the reference of operation of this particular model. If the manual is used for other purposes, SILVERFOX will not undertake any according consequences and responsibility. All information of this manual shall be protected by copyright and shall not be copied and translated in any part of this specification without the written consent of our company SILVERFOX.

2. Warning

- Power must be cut off when changing electrical components or maintaining and cleaning machines.
- The plug must be plugged into an outlet that is properly installed and grounded, to prevent the risk of fire and electric shock.
- Do not stand on this equipment.
- Do not allow children to play with and place the equipment in a place where children can touch. Please adjust the backrest to the highest position when you leave.
- Please do not place the equipment in wet places such as bathroom to avoid electric shock or other failure; Also keep the controllers away from water.
- Please do not place and operate the equipment in places where is painting/coating or supplying oxygen.
- Unless being monitored or instructed by personnel who can be responsible for their personal safety, the people who have physical obstacles, tactile disorders, mental disorders, lack of experience, common sense or children, are not allowed to use the equipment.
- Please contact distributor, service center or related personal with appropriate skill and experience for repairing if the plug is damaged, in case of any danger.
- Please make sure there is no accessible thing within the stroke during any operation of the beds.
- Operation should be processed by trained professionals.

3. Precautions

- This product should be used by an experienced person who must be familiar with the product structure, performance and instructions. And make the regular maintenance work.
- Read this manual carefully before installation, operation and adjustment. And please keep it well.
- This product shall not be used for single side or single point loading work.
- Comply with safety operation rules, product shall not be overloading, and to ensure that the product safety protection equipment is complete and reliable, eliminates unsafe factors on time.
- Tighten bolts and nuts regularly to avoid failure caused by loose, sliding, vibration and falling off.
- During the maintenance, the operator shall not disassemble any parts of the bed at will.
- This product is not allowed to operate when it's with fault. If abnormal phenomenon or abnormal sound is found, it must be stopped for inspection immediately, and work can be resumed after troubleshooting.
- The operator must be familiar with the precautions described in each section of the manual to ensure the safety of person and product.
- This product is equipped with a three-wire power cord. The power cord must be plugged into a three-hole outlet which is properly installed and grounded. This is not only to prevent the risk of electric shock, but ensure product can work properly.
- Please operate the product strictly accordance with the warning label stamped on it.
- While controlling the lifting , the button must be pressed continuously until the product in a suitable position.
- Please pay attention that the continuous working times should be Max. 2Min. ON ; 18Min. OFF, when operating the motor.
- Maintenance should be processed by trained professionals.
- After every treatment, please only use neutral solution to clear the dust or stains on the product.
- When adjusting each part, please keep your hands, feet and head away from the position indicated by the arrow. (As shown in the photo)

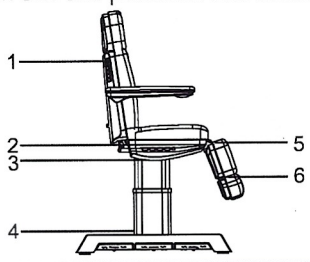

4. Installation

1. Put the product to a proper location, according to the overall layout, the daylighting or artificial lightings and operation condition of the salon's or the home. And keep it in the clean, dry and cool environment.
2. Open the packing carton to check if the product is intact and whether the accessories or spares are complete. Please contact distributor or us if there's any problem.
3. Installation
   Place the product to the proper position. Please note that it is unnecessary to install extra screw on the floor to fasten the bed, because the original design has taken the stability into consideration. But please ensure the product is placed on a firm and flat ground, so as to prevent any accident. If the product rotates or slant due to rough ground, please adjust the four pieces of plastic feet (M10×30) and nuts (M10) by hexagon open-end wrench, which are fasten on the bottom panel, so as to ensure the product is stable.
4. Connect the plug of product with power supply properly. (As shown in the photo)

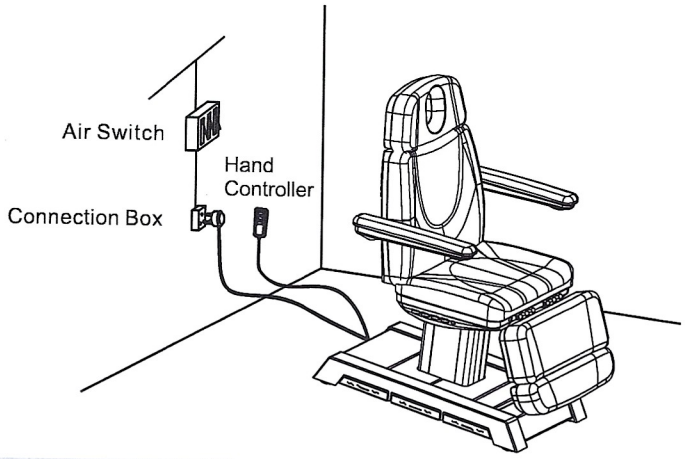

5. Structure of products

- This product consists of control box, motor, wooden part, hardware, plastic parts and leather. Among them, the control box is controlling the operation of the motors and the hand controller.
- This product includes angle adjustment of the backrest, angle adjustment of the seat cushion and lifting adjustment which is an overall and integral structure.
  (As shown in the photo)

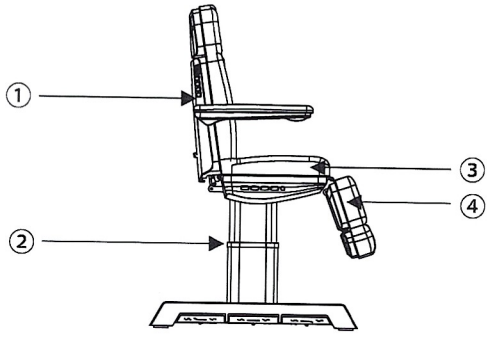

① angle adjustment of the backrest
② lifting adjustment
③ angle adjustment of the seat
④ angle adjustment of the footrest

6. Operation Instruction

Standard Configuration (Button Panel)

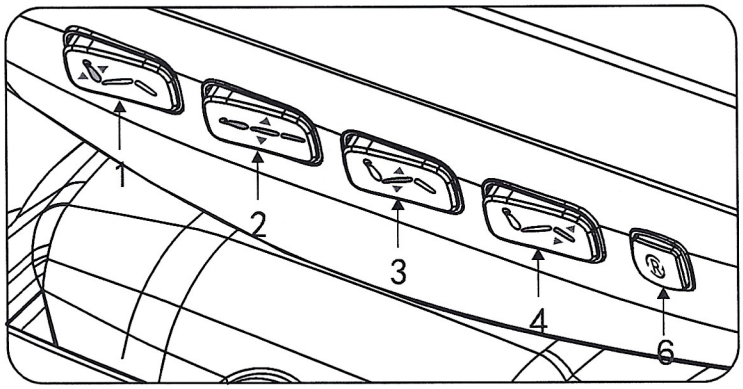

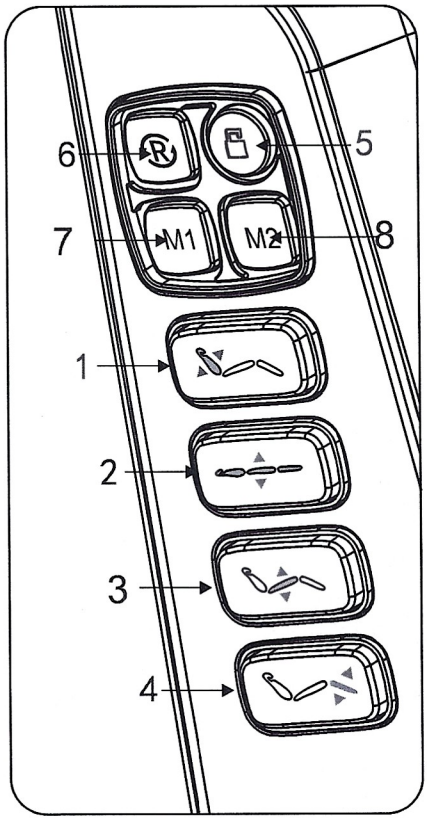

No.	Description	Operation
1	Button for Backrest Adjustment	Press button right (left), backrest moves up (down), angle increases (decreases) at a constant speed.
2	Button for Height Control	Press button right (left), seat moves up (down), height increases (decreases) at a constant speed.
3	Button for Seat Adjustment	Press button right (left), seat inclines backward. height increases (decreases) at a constant speed.
4	Button for Footrest Adjustment	Press button right (left), legrest moves up (down), angle decreases (decreases) at a constant speed.
5	Safe-lock button	Keep pressing the "safe-lock button"for about three seconds, lighting up the red light around the button, all the buttons can not be operated except safe-lock button. Keep pressing the safe-lock button for about three seconds again, the red button lights go out, all the buttons return to normal operation status.
6	One-key reset button	Press the button, the backrest will automatically move up to the maximum, the seat cushion angle will automatically move to flat, footrest will move down to the minimum, the height of the bed will automatically reach to the setting Position
7	Memory position setting 1	Memory/Programmable postion setting: After adjusting the chair to the requested position, press "M1" button for 2~3seconds, when there is sound of "beep...beep...beep", it means the position is set successfully.

8	Memory position setting 2	Memory/Programmable postion setting: After adjusting the chair to the requested position, press "M2" button for 2~3seconds, when there is sound of "beep...beep...beep", it means the position is set successfully.

1.Standard Configuration
(Built-in Foot Controller)

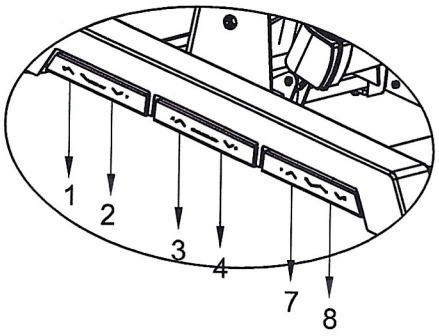

2. Optional Configuration
(Hand Controller)

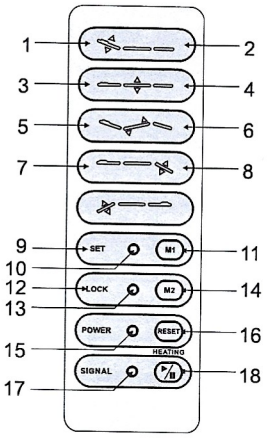

3. Optional Configuration
(Foot Controller)

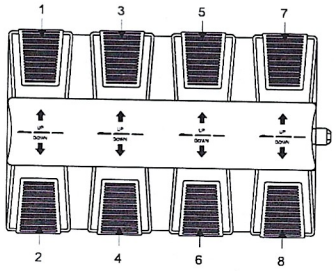

No.	Description	Operation
1	Backrest moves up	Backrest goes up smoothly by pressing the button.
2	Backrest moves down	Backrest goes down smoothly by pressing the button.
3	Whole bed moves up	The bed goes up smoothly by pressing the button.
4	Whole bed moves down	The bed goes down smoothly by pressing the button.
5	Seat cushion up	Seat inclining smoothly by pressing the button.
6	Seat cushion down	Seat goes flat smoothly by pressing the button.
7	Footrest moves up	Angle of right footrest decreases smoothly by pressing the button.
8	Footrest moves down	Angle of right footrest increases smoothly by pressing the button.
9	Enter the memory position setting (Option)	The indicator light turns on after pressed the button for 2 seconds, then enter the memory position setting state.
10	Indicator light of memory setting (Option)	
11	Memory position setting 1(Option)	1. Pressing the button "SET" for 2 seconds to enter the memory position setting state, the memory position setting indicator is on. Set the position you need, and pressing the button "M1", the actions are set into memory. Exiting the memory position setting state and the indicator goes off. 2. Press the button to move to the memory action state automatically.

No.	Description	Operation
12	Safe-lock button	Keep pressing the "safe-lock button" for about two seconds, lighting up the red light around the button, all the buttons can not be operated except safe-lock button. Keep pressing the safe-lock button for about two seconds again, the red button lights go out, all the buttons return to normal operation status.
13	Safe-lock button light	
14	Memory position setting 2(Option)	1. Pressing the button "SET" for 2 seconds to enter the memory position setting state, the memory position setting indicator is on. Set the position you need, and pressing the button "M2", the actions are set into memory. Exiting the memory position setting state and the indicator goes off. 2. Press the button to move to the memory action state automatically.
15	Power indicator	Hand controller are connected with power supply properly, indicator light is on. Otherwise, it won't light.
16	One-key reset button	Press the button, the backrest angle will automatically move to the maximum, the seat cushion angle will automatically reduce to the minimum, footrest angle will automatically move to the maximum, the height of the bed will automatically reach to the setting Position
17	Indicator light of heating function (Option)	Pressing the button, the light is on, the heating function works; pressing the button again, the light is off, the heating function stops.
18	Heating (Option)	

Notes:

1.The heating function is only available for the models with heating function.
2.Different hand controllers should be chosen according to different configuration.

Lighting adjustment

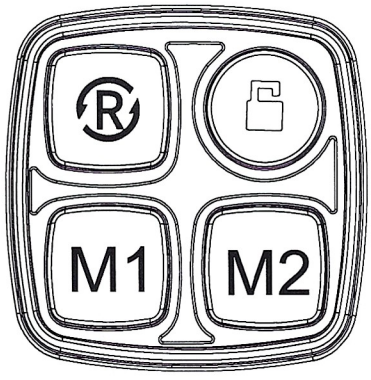

The adjustment is controlled by buttons on backrest and seat.
1. Short press the button " " to enter the lighting adjustment mode. The light around the buttons will rapidly blink.
2. Press the button "M1" to change the color(total 16 kinds of modes)
3. Press the button "M2" to change the brightness (total of 12 kinds of gear)
4. Set the light color and brightness you need, and press button " " again to exit the lighting adjustment mode. Or if no action is taken within 10 seconds, the lighting adjustment mode will automatically exit.

Control by hand control
1.Keep pressing "SET"/ "LOCK" for 2 seconds to enter the light regulating mode
2.press "M1" to choose the light mode (total 16 kinds of modes)
3.Keep pressing "M2" to adjust the brightness (total of 12 kinds of gear)
4.After choosing the light mode and light brightness, then Keep pressing "SET"/"LOCK" to exit the light adjustment.

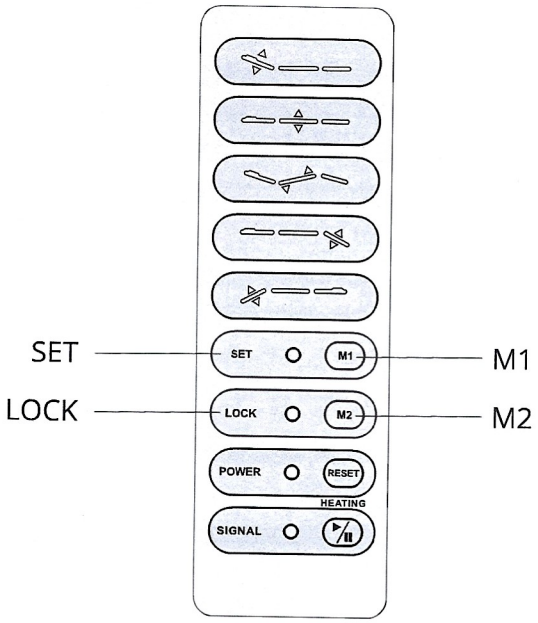

7. Operation Cautions



NO SITTING

Please do not sit in the backrest/footrest position or jump to the backrest/footrest position, avoid the risk of falling due to excessive force fracture of the backrest/footrest joint.

8. Technical Parameters

Power	AC 100-120V or AC 220-240V or AC 100-240V, 50/60Hz
Maximum Power	300W
Environment Temperature	0°C~+40°C
Relative Humidity	30%~90%
Lifting Rated Load	200kg
Package Size	142×69×67cm

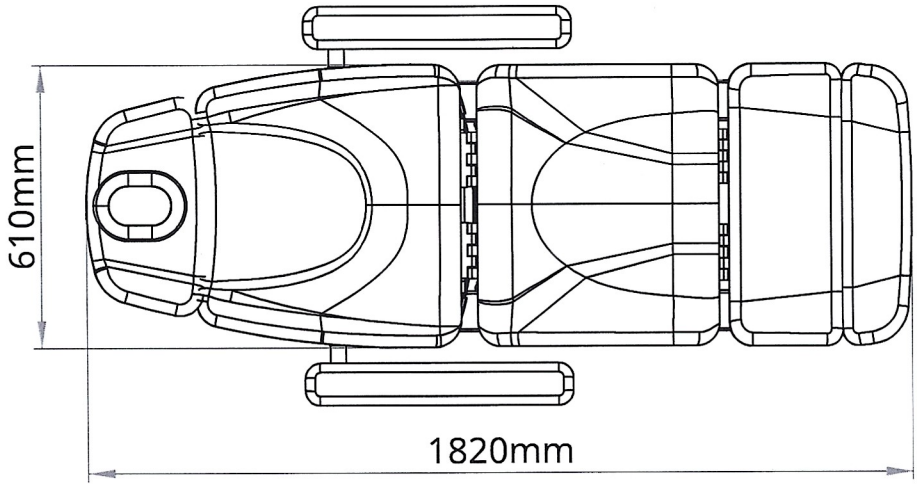

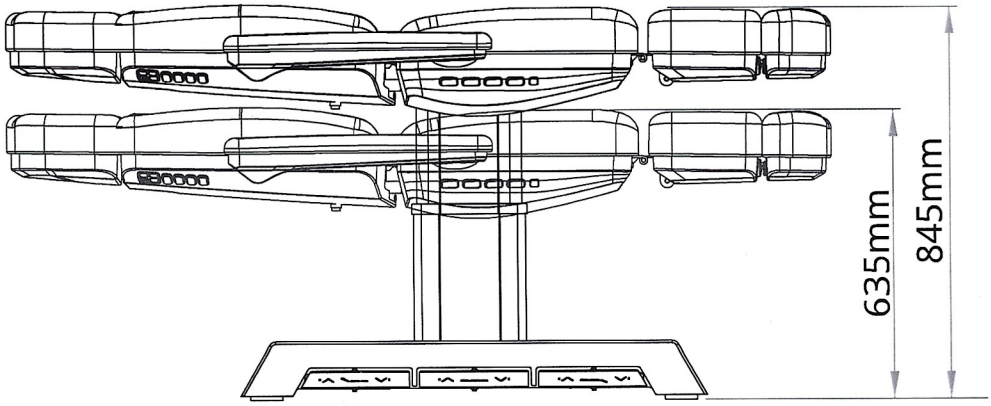

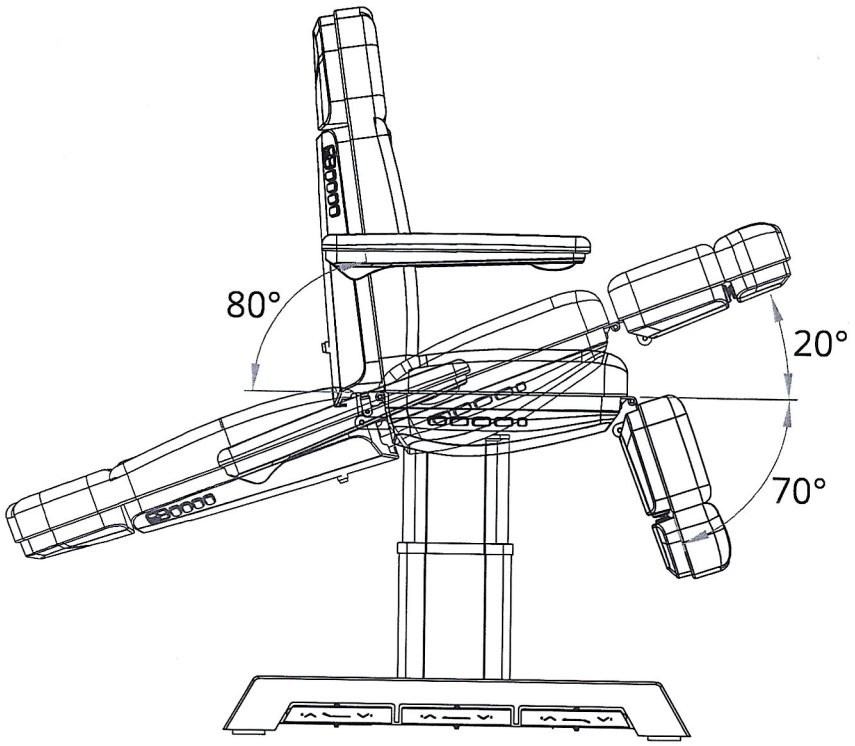

9. Maintenance

1. After every treatment, please only use neutral solution to clear the dust, stains on leather, metal part or other parts. Disinfecting solution like alcohol, acid or alkaline solution are forbidden. This is to prevent the lifetime of the components from being shortened.
2. Please lubricate the moving parts regularly (once a year)
3. After usage,please stay the upholstery flat to 180°

10. Circuit System Connection Diagram

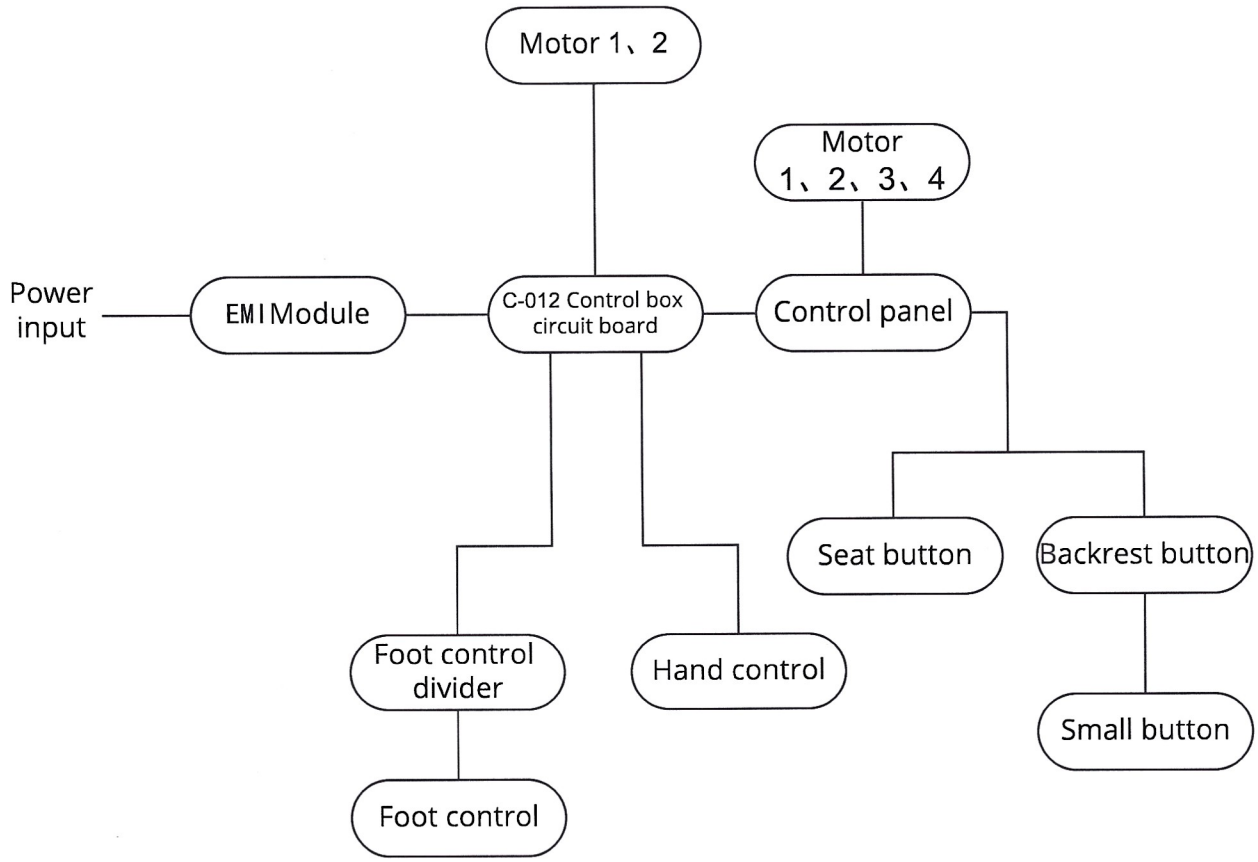

12. Troubleshooting

The Fault Phenomenon	Reason	Solution
motor can't work normally	1. The power cord is unconnected or not plugged well.	Connect the power cord or plug it well.
	2. Poor quality of the hand controller or foot controller.	Replace the hand controller or foot controller.
	3. Poor quality of the control box.	Please contact maintenance center or supplier for troubleshooting.
	4. Repture of motor tail.	
	5. Motor was damaged.	
	6. Emergency Switch has been pressed but not reset.	Reset the emergency switch.
Abnormal Sound	1. The rotating parts are short of lubricating oil.	1. Add lubricating oil.
	2. Rotating positions (such as hinge, POM sets, gas lift) are short of lubricating oil.	2. Add lubricating oil.
	3. Motor quality problems.	3. Replace the motor.

If problem is still not solved after above operations,
please contact maintenance center or supplier to solve it.



Do not dispose of old or defective appliances in domestic garbage;
this should only be done through public collection points.

▲ Please check the product specification before use. This manual is for reference only. Specifications are subject to change without prior notice.