The Source for Pedicure Spas

Copyright 2025 by J&A USA Inc
Printed in USA

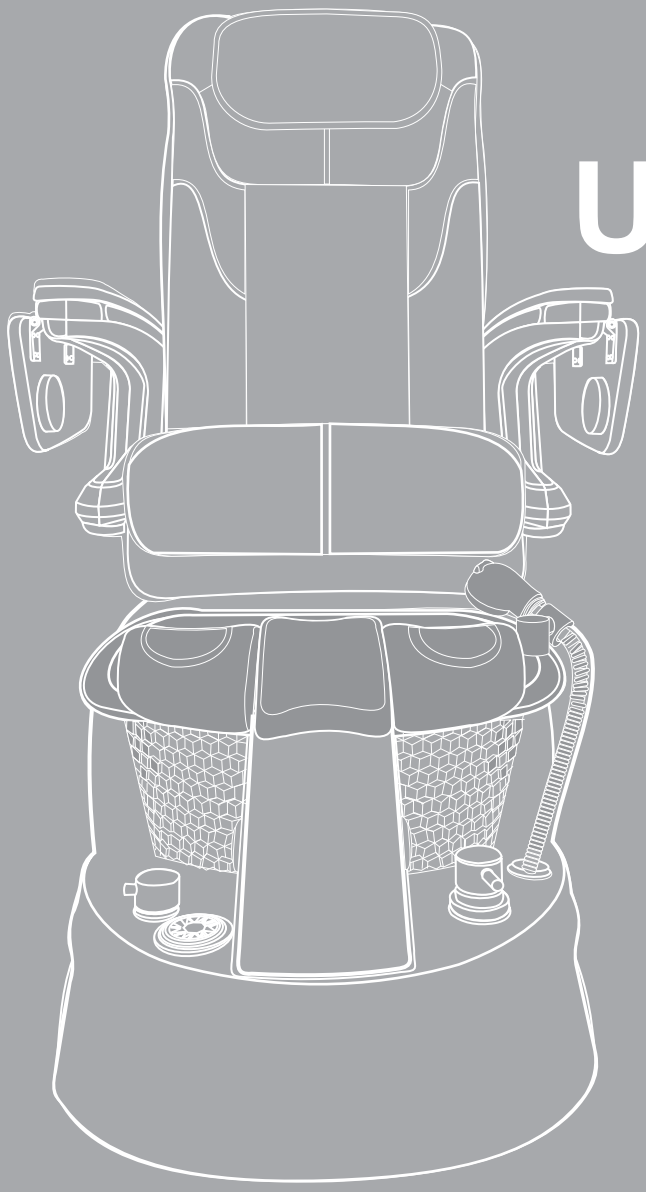

USER MANUAL
EMPRESS XO

EMPRESS

1.631.243.3336

WWW.JAUSAINC.COM

SERVICE & ORDER PARTS

1.631.243.5300

WWW.TOEPIA.COM

TABLE OF CONTENTS

Introduction		----------	3
Safety Instruction		----------	4
Install Consideration		----------	5
User's Recommendation		----------	6
Maintenance & Cleaning	Upholstery	----------	7
	Pedicure Spa	----------	8
Identification (Pedicure Spa)		----------	9
Installation Summary		----------	10
Dimension	Empress XO	----------	11
Drain Instruction		----------	12
Identification - Plumbing		----------	13
Option	Discharge Pump	----------	14
	Ventilation	----------	15
	Auto Fill (5th Gen.)	----------	16 - 17
Pipeless Motor	Magna-Jet (Optional)	----------	18 - 19
	Infiniti Pipeless Motor	----------	20
Chair Assemble Footrest Assemble instruction		----------	21
Remote Functions		----------	22
Mechanism (Expose View)		----------	23
Trouble Shooting		----------	24
BackFlow Protection		----------	25
Warranty		----------	26
Warranty Registration Form		----------	27
Info. QR code to website		----------	28



Introduction

Thank you for choosing Empress series,This finest Whirlpool Pedicure Spa has been develop and Manufactured by J&A USA Inc., to bring quality and exquisitely balanced design yet afford-ability and dependability when properly use. Please read this entire manual thoroughly before installation and use

PLEASE TAKE TIME TO READ THIS MANUAL THOROUGHLY BEFORE USE. If you have any questions or concerning with our pedicure spa, Please contact our customer service and technical support at 631-243-5300 Monday through Friday 9AM - 5PM or email us at www.info@toepia.com

Important requirements

The MFG requires that you contact your local, licensed plumber and licensed electrician to install your new spa. Installation MUST be in compliance with all local and state building codes. Your pedicure spa can not operate efficiently or safely unless it is provided with adequate electrical power, sufficient water pressure, proper water temperature, and required drainage capabilities. Contact your local building inspector for information and local code compliance procedure that need to be followed when having your new pedicure spa installed. Subsequent inspections and approvals that may be required are the responsibility of the purchaser.

Shipment Inspection (DO NOT DISCARD THE SHIPPING CARTON)

Examine the components immediately upon arrival to make sure no damages to the pedicure spa base and chair during the shipment. It is very important that you notify the driver directly and notation should be on the face of the freight bill or bill of lading of any damage. Failure to note damage on the bill of lading may prevent any claims you may have against the carrier.

If concealed or damage is found, you MUST notify the carrier at once and request an inspection. **DO NOT DISCARD THE SHIPPING CARTON** If receiver sign the carrier clean receipt of goods that have been damaged in transit .Do so at your own risk and expense.

Precautionary for using spa

- Do not stand in the basin of the spa.

- Excessive water temperature is dangerous and should be checked before use. Maximum water Temperature should not exceed 102～104F Degree.without health condition (See page 21 User's Recommendation).

- Always enter and exit the spa slowly and carefully. And Do not step on the bowl

- Never bring or operate any electrical device near pedicure spa.

- The unit has a weight capacity of 230 pounds.

Health Warning

Individuals whose feet or legs are inflamed or have open wounds should not be allowed to use the pedicure spa at any time. The technician should advise clients to consult their physician before using the spa if there is any sign of fungal infection, swelling, fracture, or persistent pain. In some cases diabetics may experience improved circulation in their feet, but should first consult their physician prior to receiving a pedicure.

If the client experiences any pain or discomfort, discontinue the use of the pedicure spa immediately.

IMPORTANT USER INSTRUCTION & SAFETY NOTICE. KEEP SAFE!

ELECTRICAL NOTICE

In order to ensure proper use, a separate **120v 60HZ 15amp(per dedicated outlet)** GFCI protected grounded circuit must be used to supply power to each pedicure spa. Failure to do so renders the Limited Warranty void.

**PEDICURE SPAS outside the US must be in accordance with the respective country's rules and regulations. For example, if installed in Canada, the pedicure spa must be in accordance with the Canadian Electrical Code Part1.

GROUNDING AND GFCI NOTICE

STOP! PLEASE READ PRIOR TO INSTALLATION AND USE!

When using electrical products, basic precautions should be followed:

1. Risk of electrical shock. Connect the pedicure spa only to a circuit protected by a ground-fault circuit-interrupter.GFCI)
2. Every EMPRESS Pedicure Spa must be installed by your local, licensed plumber and licensed electrician to install your new spa. Installation MUST be in compliance with all local and state building codes.
3. Your pedicure spa cannot operate efficiently or safely unless it is provided with adequate electrical power, sufficient water pressure, proper water temperature, and required drainage capabilities.
4. Contact your local building inspector for information and local code compliance procedure that need to be followed when having your new pedicure spa installed.
5. Subsequent inspections and approvals that may be required are the responsibility of the purchaser.

Shipment Inspection

Examine the components immediately upon arrival to make sure no damages to the pedicure spa base and chair during the shipment. It is very important that you notify the driver directly and notation should be on the face of the freight bill or bill of lading of any damage. Failure to note damage on the bill of lading may prevent any claims you may have against the carrier.
If concealed or damage is found, you MUST notify the carrier at once and request an inspection. DO NOT DISCARD THE SHIPPING CARTON If receiver sign the carrier clean receipt of goods that have been damaged in transit .Do so at your own risk and expense.

STOP! PLEASE READ PRIOR TO INSTALLATION AND USE!

TO REDUCE THE RISK OF BURNS, ELECTRIC SHOCK, FIRE OR INJURY:

1. Only authorized operators are permitted to use the pedicure spa.
2. If the pedicure spa has a damaged cord or plug, do not use.
3. Keep all electrical cords away from heated surfaces.
4. Do not operate outdoors.
5. You are responsible to ensure that all plumbing connections meet national, state and local code.
6. Hot & Cold shut-off utility valves required
7. The water temperature should be adjusted accordingly.

Important installing Considerations

Please check adequate Electrical Rating & Hot water source Temperature setting based on Hot water source recommendation before installations.

Electrical Service

110V, 60Hz, 15Amp GFCI protected grounded circuit MUST be used to supply power each individual pedicure spa. And the main circuit breaker MUST be at 25Amp. For maximum of two units per each electrical outlet.

Water Supply

All plumbing connections must conform to local codes.
Water supply to the spa should be provided with adequate water pressure and water temperature.

Water pressure

To fill the basin correctly up to level, Normal water pressure of 30 to 80 PSI is required.

Water temperature (Source)

The hot water supply temperature must not exceed 120F / 48C.Or adjust your hot water source accordingly. For hot and cold water supply fittings and drain fittings location, see below diagram. Carefully connect the water supply line to the appropriate fittings located on the rear of the pedicure spa. Shut-off valve are recommended (not provided).

Pressure / Temperature (Faucet Specification)

Pressure: 0.41 mpa
Working Temperature: 33F to 140F
Recommended Flow: 11.2 L/Min.

UL LISTED / CE CERTIFIED

Compliance with following Code (s): Uniform Plumbing Code, National Plumbing Code of Canada and international Plumbing Code. Also, Compliance with following Standard (s): ASME A112.18.3M / A112.18.1M, CSA B125, NSF / ANSI 61

ANSI - American National Institute, ASME - American Society of Mechanical Engineers, CSA - Canadian Standard Association IAPMO - International Association of Plumbing and Mechanical Officials, UL - Underwriters Laboratory

All J&A USA products has been compliance with requirements for Whirlpool bath appliances contained in ASME / ANSI A112.18.3M / A112.181M, CSA B125, NSF / ANSI 61 and with dual backflow protection Compliances with following standard (s):AMSE A112.18.3-2002 (R2008) AND ASME A112.18.1-2012 / CSA B 125.1-12

BackFlow Protection Device (Dual Check Valve)

Due to Town and / or State requirement/s are varies in building code, if the Town and / or State requires Vaccum Breaker, As the Plumber MUST provide Vaccum Breaker according to building code requirement.

Drain Facilities

The pedicure spa Drain must meet local plumbing codes. **Check valve for Drain (not Provided) Must be installed by a licensed plumber.** Also Pedicure spa must be securely fasten to the floor.

Installation Summary

The installation must comply with local, state, and federal building, plumbing and electrical codes, where applicable. A licensed plumber should complete the plumbing of the pedicure spa.

Note: Failure to comply with federal, state, or local codes and ordinances will result in warranty being nullified and void.

Please print this page for your review and reminder.

User Recommendation

PLEASE READ THE MANUAL THROUGHLY BEFORE USE TO ENSURE CORRECT OPERATION.

THOSE UNDER A DOCTOR CARE OR WHO ARE EXPERIENCING ONE OR MORE OF THE FOLLOWING CONDITION SHOULD CONSULT THEIR DOCTOR BEFORE USE.

- You are receiving medical treatment or are feeling ill.
- Your body shows any cute symptoms.
- You have heart disease.
- You are pregnant or having a menstrual period.
- Your doctor has ordered you to rest.
- You have a back disorder resulting from an accident or disease
- You have high fever.
- You have sensory disorders.
- You have medical electrical device (e.g. pacemaker).
- You have service interruption in the circulation of the legs.
- You have an open wound.
- You are diabetic.

FAILURE TO DO SO MAY RESULT IN ACCIDENTS AND HEALTH PROBLEMS.







Cleaning and Maintenance

Synthetic Leather

PU synthetic leather is made from polyurethane resin after coating, drying and curing. Compared with the genuine leather, PU synthetic leather is more resistant to acid, alkali, heat and sunshine. However, because of its own physical and chemical properties, it should not be put at the place where there is dust, high temperature, high humidity, low temperature or strong sunshine and the environment containing acid and alkali agent and solution. Otherwise, it will be easily cracked, quickly aging and hydrolyzed.

Cleaning methods of PU synthetic leather and precautions:

1. Organic agent, grease solution and compounds, especially the strong solvent, e.g. alcohol, turpentine, thinner can not be used for cleaning the PU surface and otherwise the PU surface will be easily corrosive.
2. Fresh water or washing powder can not be used for cleaning the PU surface or there will be cracks.
3. Environment-friendly detergent which is containing no abradant and with a PH value of 5-7 should be used for cleaning the PU surface.
4. For the quite dirty PU surface, use a soft cloth with egg white to wipe the dirt, brush should not be used for cleaning the surface.
5. The more popular detergents in the market are: Meipingwang leather detergent and protective agent; Amway leather detergent, etc.
6. For the best result for maintaining your PU synthetic leather please inquire Empress for **Spa Leather Cleaner.**
7. Fabric inside liner and fabric padding MUST be check quarterly for the best result. In case of warn out please contact service department for replacement.(Worn and tear is not covered under warranty)

Maintenance methods of PU synthetic leather and precautions:

1. Good room ventilation should be ensured because too dry or too wet environment will fasten the aging of leather.
2. Leather sofa should avoid direct exposure to sunshine or air-conditioner wind; otherwise the leather surface will become hard. Direct exposure to sunshine will make the leather with color faded.
3. There is more sweat on body during the summer the hole of the leather will absorb the sweat. The organic matter in the sweat and the leather will have a chemical reaction during high temperature and wet environment, and there will be peculiar smell. For this, wettish soft cloth should be used for wiping frequently.
4. While wiping the sofa, the alkali cleaner should not be used because there is acid treatment during leather making and the alkali will decrease the pliability of the leather and there will be crack if the alkali cleaner is used for wiping the sofa.

Due to continuous improvements on all our products, specification, characteristics, packing, color, designs are subject to change without notice.

USER MAINTENANCE INSTRUCTIONS CLEANING AND DISINFECTING YOUR PEDICURE SPA

Note: Please be advised that it is responsibility of purchaser/user to adhere strictly to the following procedure. Any non-compliance will be considered negligence of the purchaser/user.

The Bureau of barbering and cosmetology requires that salons using whirlpool pedicure spas use the following disinfecting Procedures to ensure proper cleaning and maintenance of the equipment, and to prevent bacterial infection. For your clients safety, always use the regulations as a minimum standard for cleaning and disinfecting.

Chair maintenance: Please see chair manual for Do and Don't

A SPECIAL NOTE PERTAINING TO BLEACH

While bleach seems to be used extensively for cleaning and disinfecting of pedicure chair basins, it is NOT recommended nor is it effective. Moreover, excessive use of bleach may greatly reduce the longevity of your pedicure chair internal components (i.e. pumps, jet waste assembly, etc.). Excessive and repeated use of bleach may also void your warranty. As always, you are required to check with your state board for mandatory cleaning and disinfecting requirements and procedures.

At the end of the day:

1. Remove the intake suction screen, All debris trapped behind the screen of each pedicure spa must be removed. And the screen and the inlet shall be washed with soap or detergent and water
2. Before replacing the screen, Totally immersed the screen into an EPA- registered disinfectant with bactericidal, Fungicidal, and virucidal activity.
3. Finally, flush the whirlpool system with low-sudsing detergent and warm OR an EPA - registered cleanser for 10 minutes. Rinse with clean fresh water and drain.

Note:

Cleaning or sanitizing is NOT disinfecting. According to the CDC and EPA, disinfecting occurs only when there is a reduction of pathogenic microbes at 99.999%. Sanitizing is a only reduction of 99.9%. Cleaning of whirlpool pedicure spa requires surfactant and chelating detergents that are low foaming and have ability to remove body oils, organic oil additives, mineral oil, skin cell, nail clippings, etc.. That can accumulate both in the basin and the jets which may become fertile area for micro organism to grow.

Note:

The use of oil based products can build up in the whirlpool system causing clogging in the jet and build up onto the surface of the basin. Adherence to the above cleaning will minimize build up thus the manufacturer recommend not to use mineral oil based product.

Installation Specifications Summary

WARNING: Failure to comply with federal, state or local codes and ordinances will result in warranty being null and void.

As stated, the pedicure spa installation must comply with all **plumbing and electrical codes. A licensed plumber and licensed electrician MUST** complete the applicable connections of the pedicure spa.

Location and support: Select a level location. The floor structure beneath the pedicure spa must be capable of supporting the occupied pedicure spa.

Empress XO

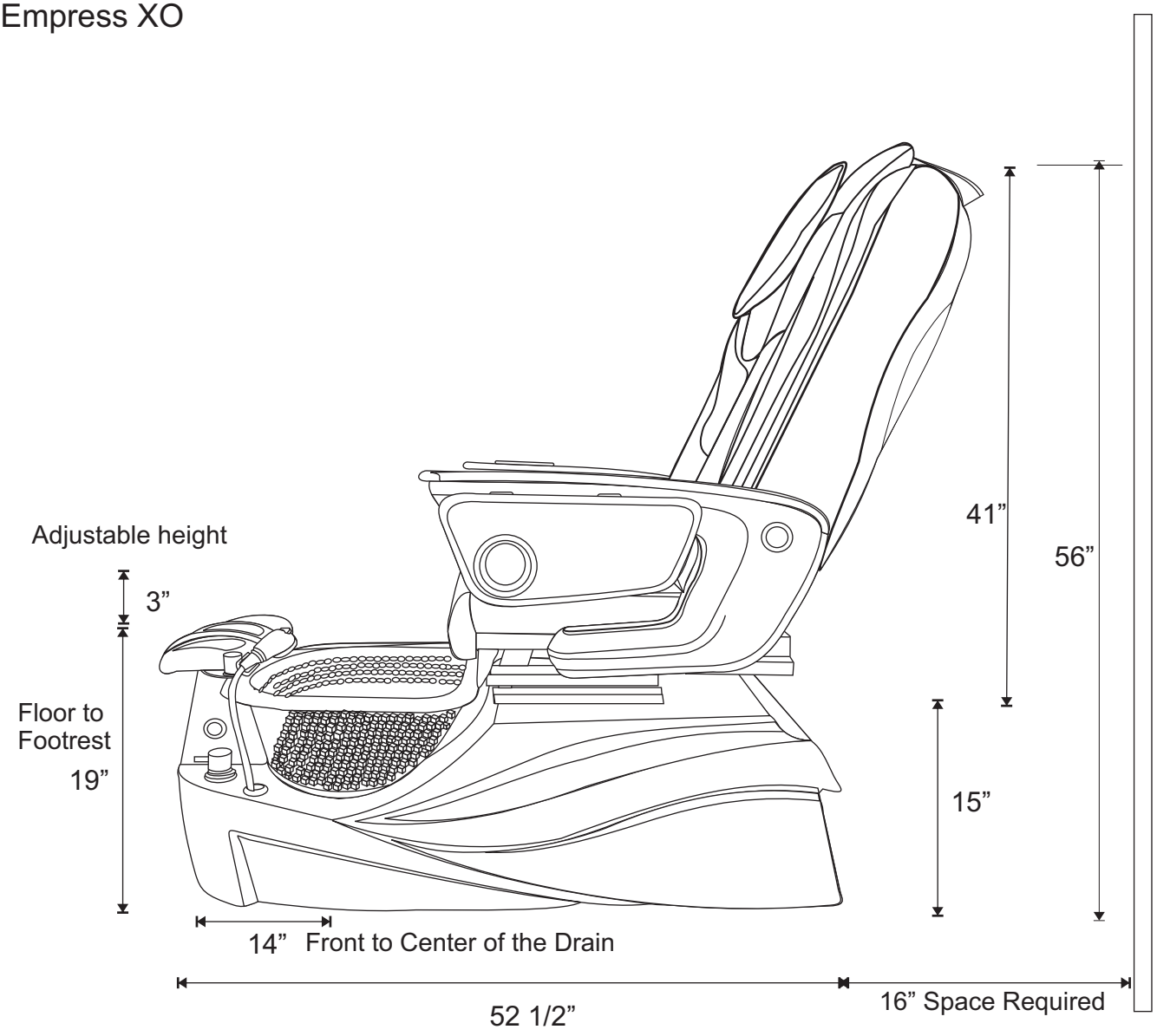

***Due to continuous improvements on all our products, specification, characteristics, packing, color, designs are subject to change without notice.*

Empress XO Identification

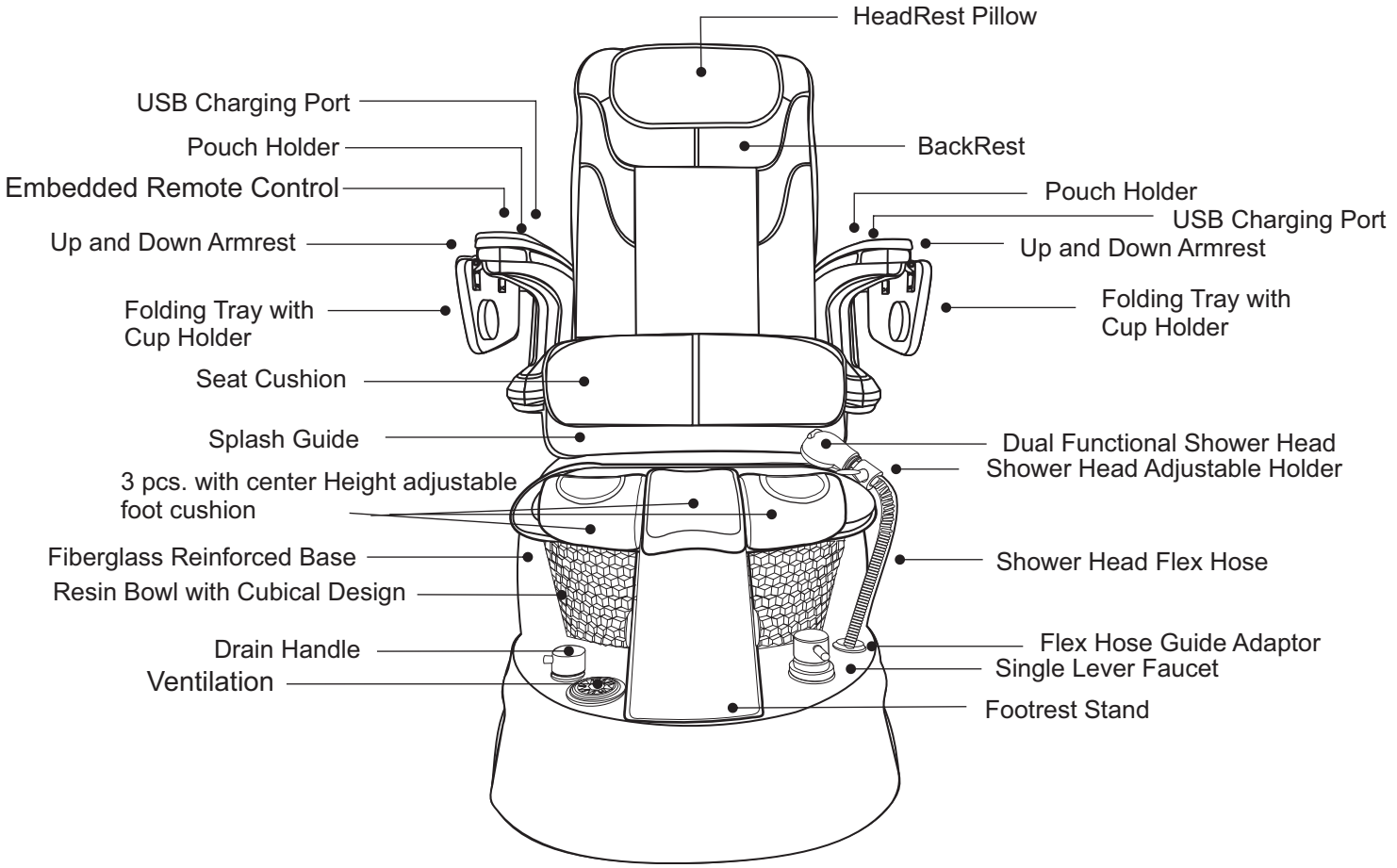

Empress XO Resin Bowl

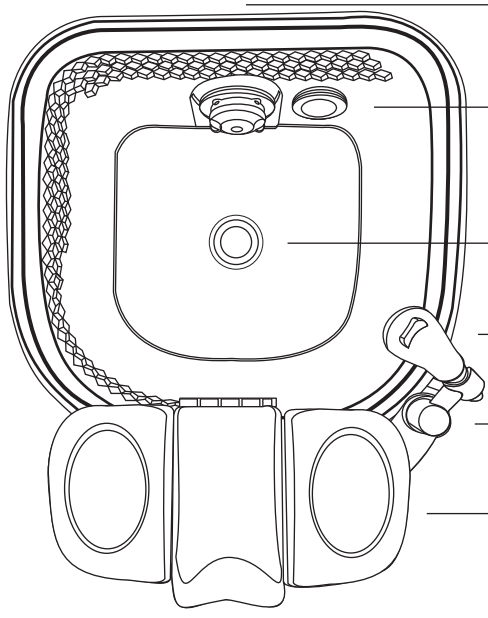

Infiniti Pipe-Less Motor

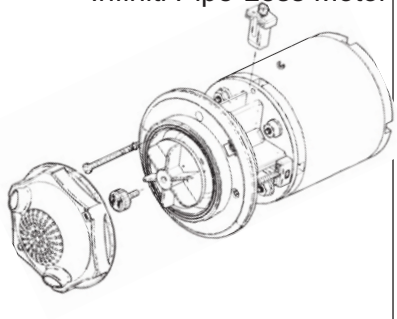

Magna Pipe-less Motor

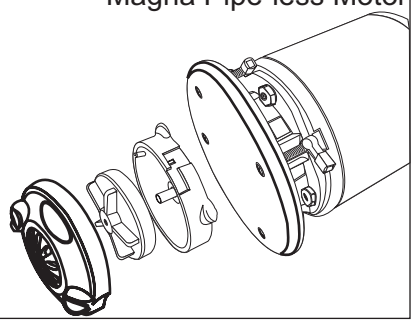

Due to continuous improvements on all our products, specification, characteristics, packing, color, designs are subject to change without notice.

Empress XO Specification

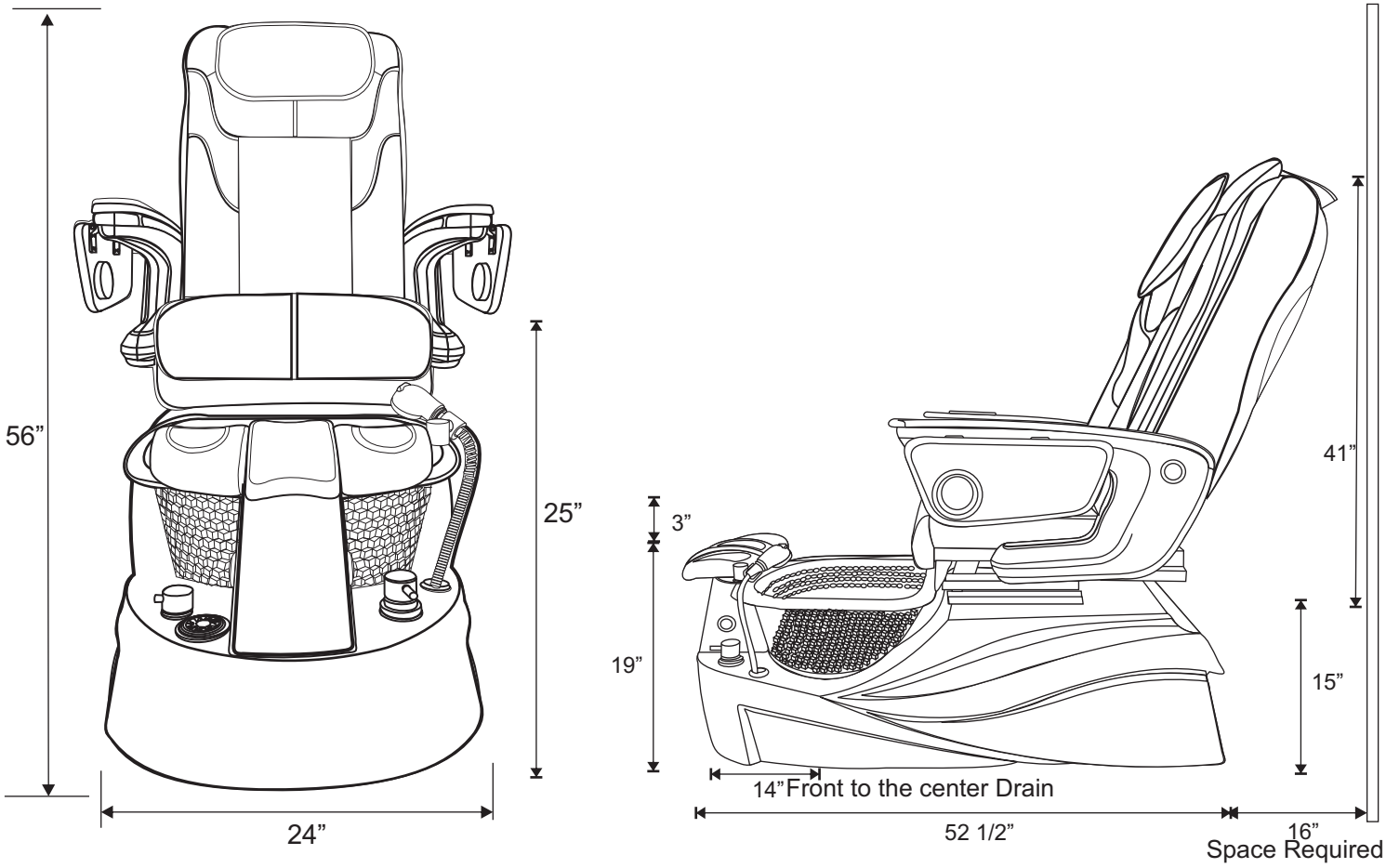

Dimension & Weight (Shipping)	Pedicure Spa & Massage Chair	37”W x 66”L x 40”H	261 Lbs
	Technician Stool	20”W x 21”L x 8.5”H	19 Lbs
Capacity of Tub		4.5 U.S Gallon	
Switch		On/Off Air Activate Switch	
Power Source	Dedicated 15Amp Wall Outlet Required		
	Pipeless Whirlpool Motor	120Vac. 60Hz.	
	Massage System	120Vac. 60Hz.	
	Discharge Pump (Optional)	120Vac. 60Hz.	
Plumbing	Hot Water	0.5” inch (Fitting Provided)	
	Cold Water	0.5” Inch (Fitting Provided)	
	Drain	1.5” PVC Outlet (See Plumbing Instruction)	
Warranty	Parts Pedicure Spa	2 Years (See detail in Warranty)	

***Due to continuous improvements on all our products, specification, characteristics, packing, color, designs are subject to change without notice.*

Empress XO Dimension

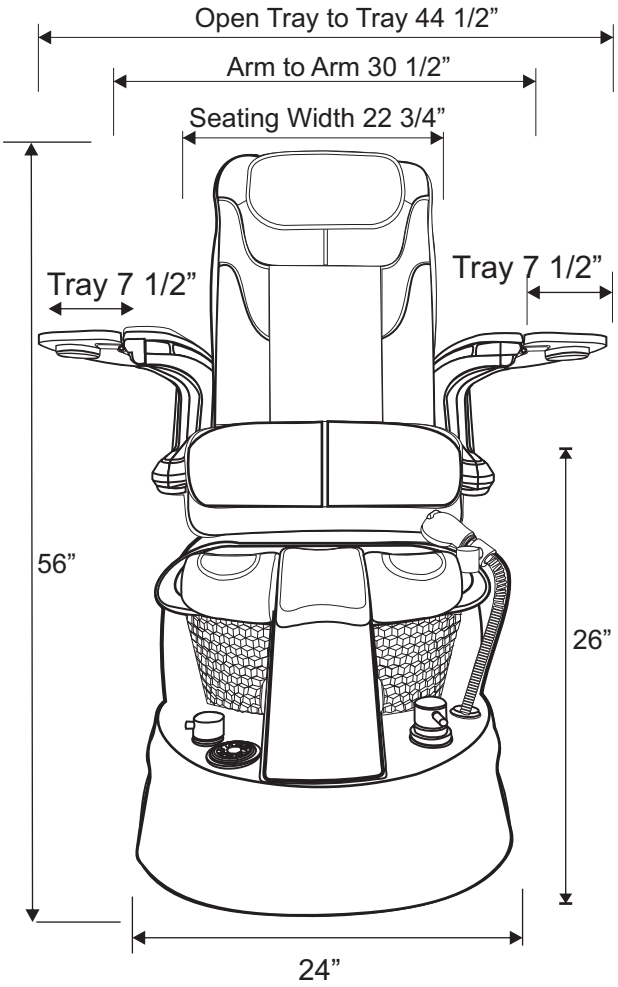

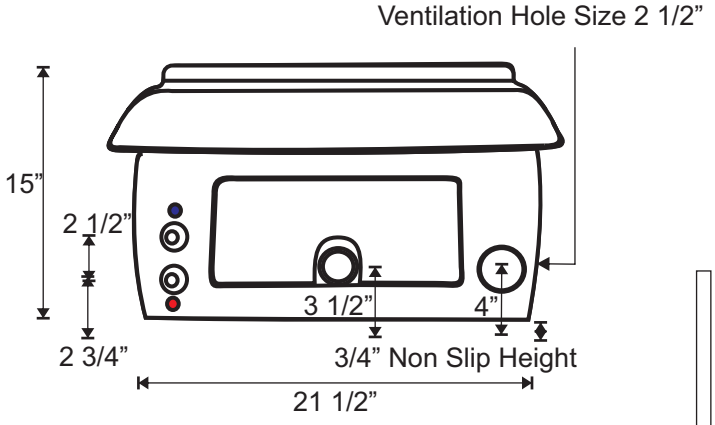

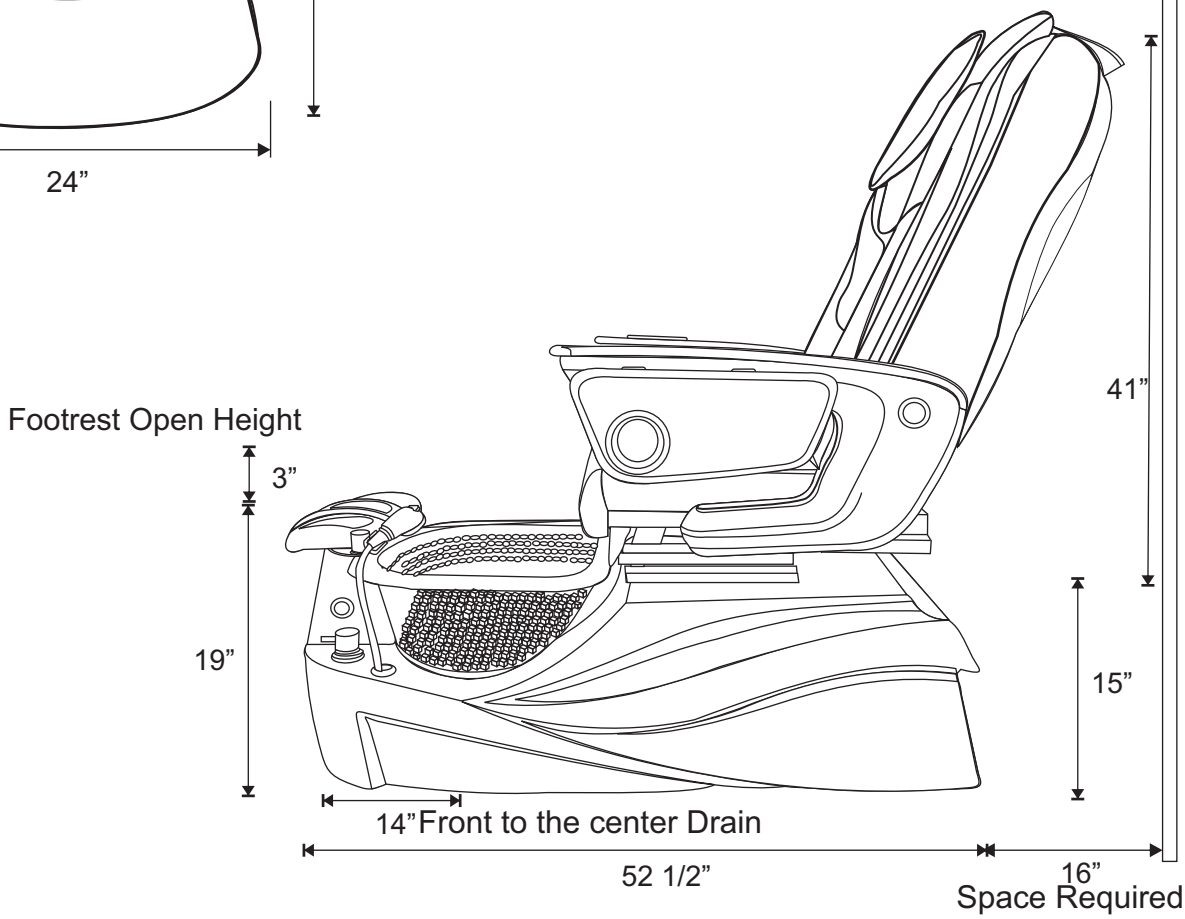

Due to continuous improvements on all our products, specification, characteristics, packing, color, designs are subject to change without notice.

Empress XO: Drain

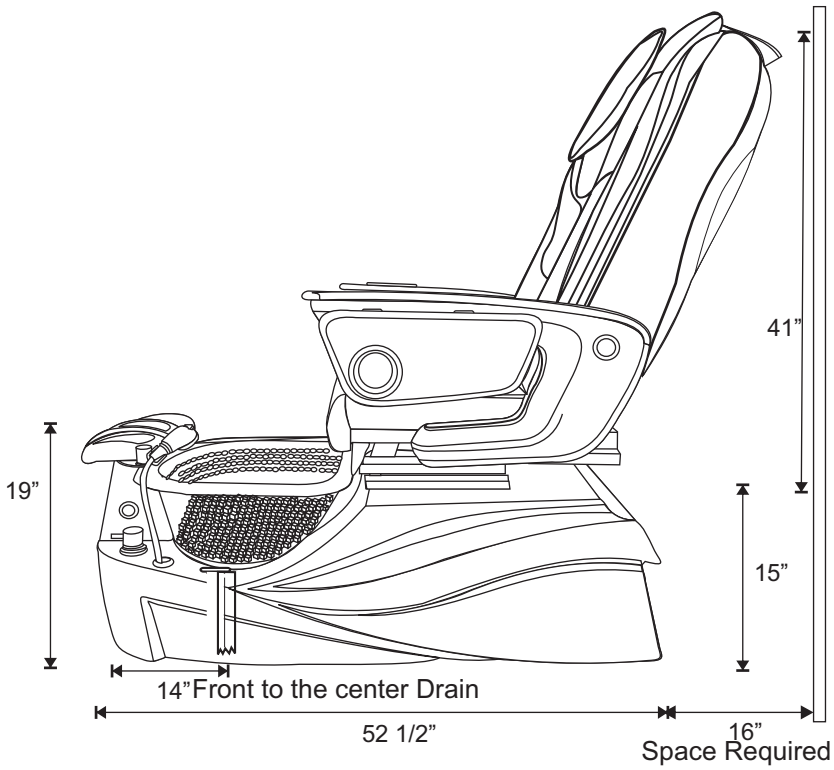

Floor Drain Connection
(Not Recommanded)
Required P-Trap installation

Discharge Pump (Main Drain
2~3 Feet above the Ground)
Required 3/4” Outlet
Connection

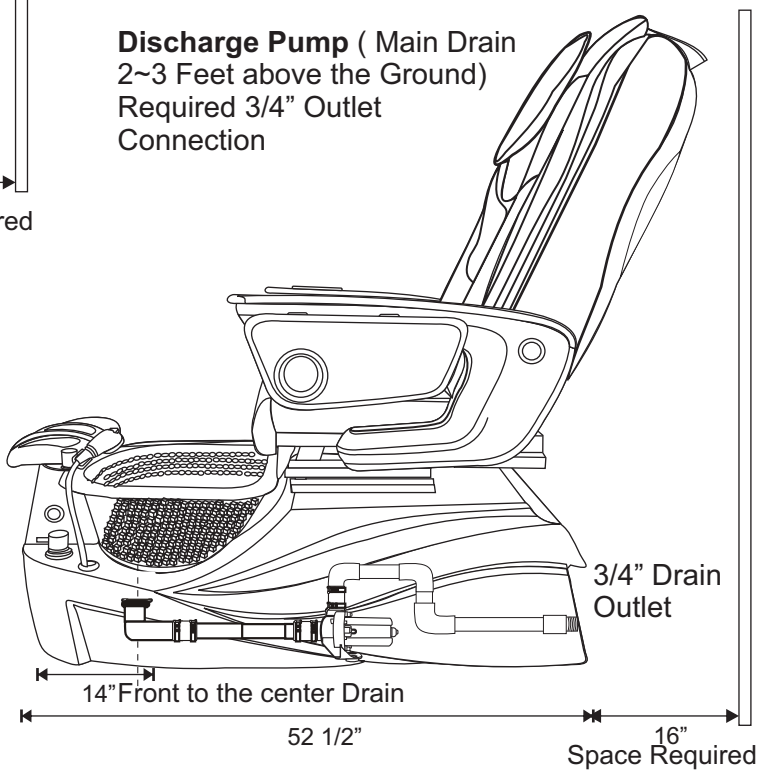

Gravity Drain Connection
Ground Level Main Drain Connection
1 1/2” PVC Pipe Outlet

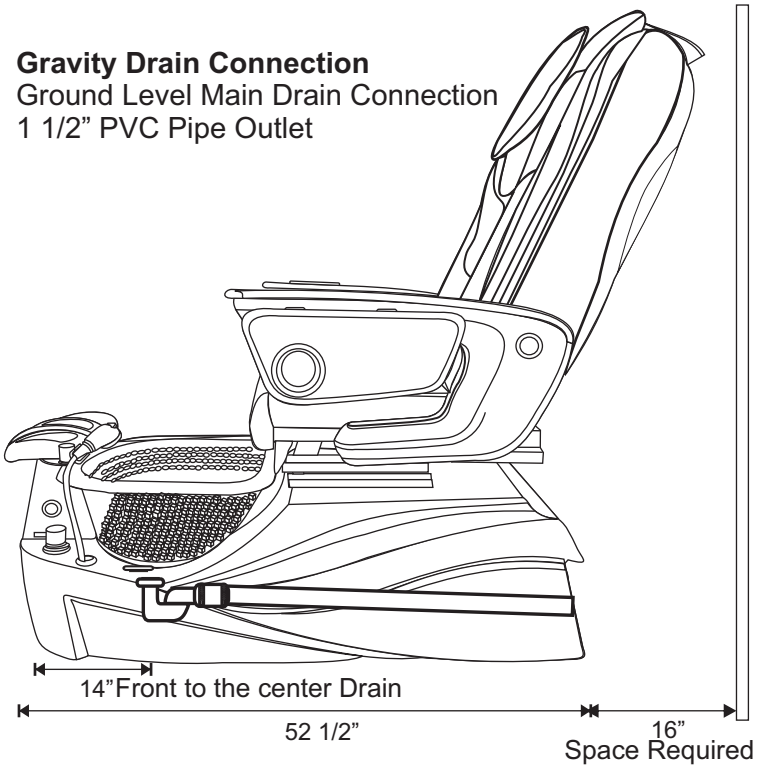

***Due to continuous improvements on all our products, specification, characteristics, packing, color, designs are subject to change without notice.**

Empress XO: Discharge Pump (Optional)

Up to3 ft +/- 45 sec. with 3/4” outlet

OPTIONAL DISCHARGE PUMP

Model: TS-B40-3A
Rating: 120VAC. 60Hz. 0.8A. 75W
Flow Rating: 6 Gal. Per Min.
Max. Lift: 3 FT.

Figure 1

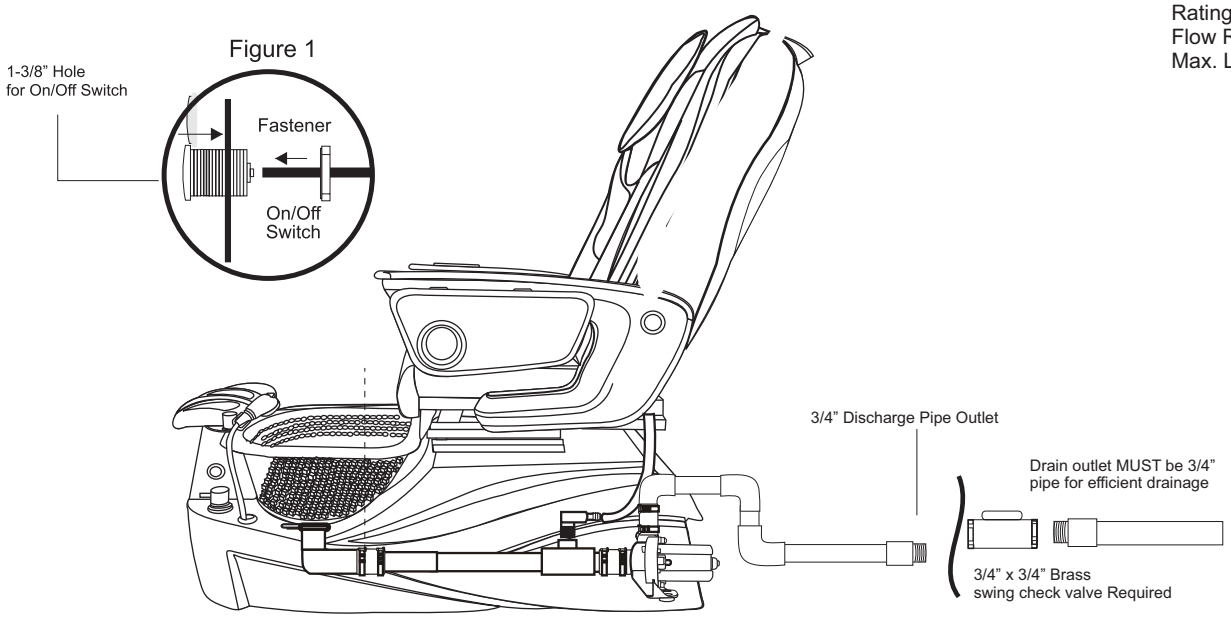

Note: PLUMBER MUST BE UTILIZED TO INSTALL
CHECK VALVE AND UTILITY VALVE FOR HOT/COLD WATER

Installation Instruction

1. Make a hole (size 1-3/8”) for the On/Off switch as shown (see fig 1) pre-drilled
2. Placed a 1/8” clear hose into the rear of the switch and on/off switch into the hole.
3. The discharge pump kit is made to fit onto the pedicure unit. (see
4. Connect E-Z connector onto the drain elbow.
5. Plug discharge pump outlet into the two minute timer outlet
6. Plug two minute timer into the wall outlet.
7. It is very important that tip of the clear tub remain above the water level

**** Please cut to fit Flex hose to size****

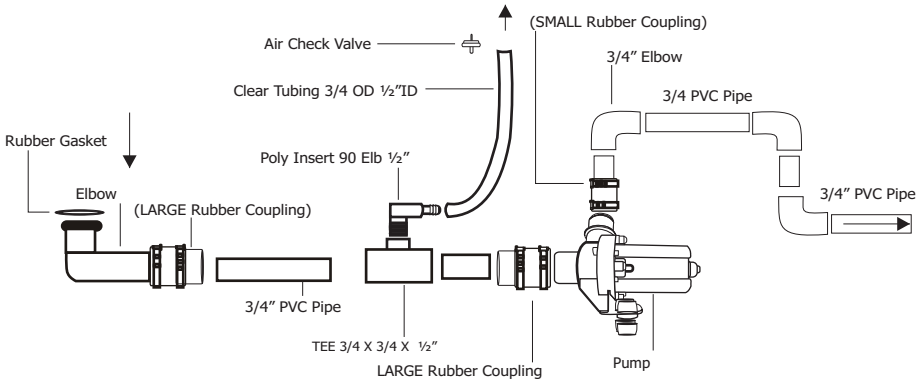

Pedicure Spa Power Control Box

* 3 On/Off Switches, 1 Continuous Outlet
* 1 Discharge Pump control with 3 Minute timer

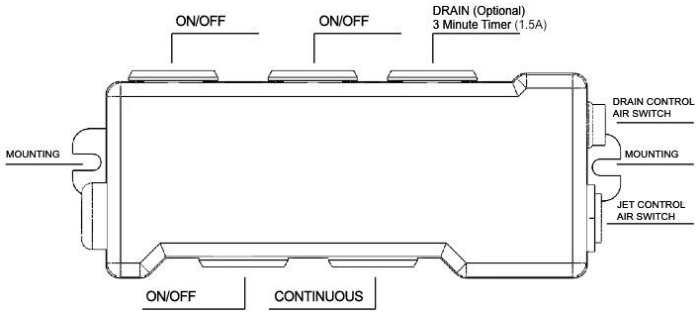

Installation and Operation (Control Box)

1. Mounting: The Controller is mounted via 2 slots as shown
2. **Pressure Switch Connection**
   Ports (Drain control and Jet control air switches) are connected to air buttons via flexible plastic tubes with recommended size as 1’8” tubing.
3. **Operation**
   * Pressing Jet Air Switch button will turn the Jet and Basin Light
   * Pressing the Drain Air Switch button will turn On the drain pump for 3 minutes.

Operation Instruction

Warning ! DO NOT RUN DRY

1. Turn to open drain plug. 3 to 5 second for air to release from the pipe
2. Press On/Off switch to activate timer.
3. At any time, water drain completely from the basin. Press On/Off switch to stop built in two minute timer.

*****Due to continuous improvements on all our products, specification, characteristics, packing, color, designs are subject to change without notice.***

J&A - Air Ventilation System for Pedicure Spa

Air Ventilation System - improve air quality, can minimize exposure and reduce the health risk of the customer and salon technicians.

Empress XO

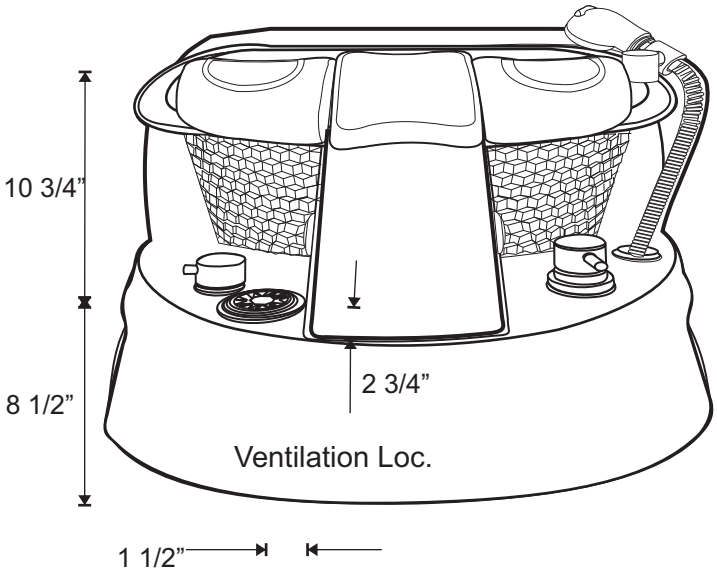

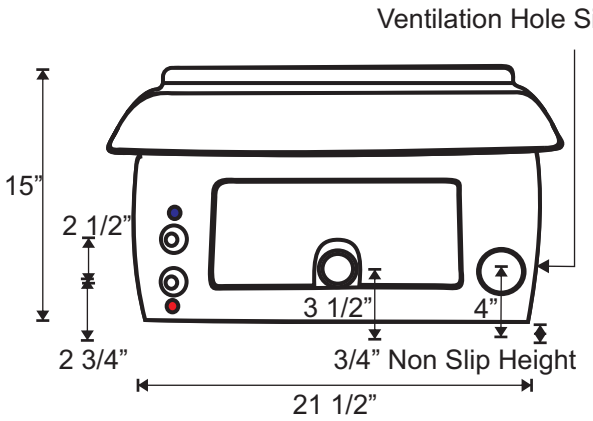

Example to the wall connection
NOT Provided
Always check Federal, State specific ordinances and local code.

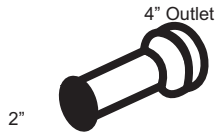

INTERNATIONAL CODE COUNCIL®

ICC Minimum Ventilation Rates

Occupancy Classification	
People Out door Air flow Rate in Breathing Zone, **cfm/person**	20
Default Occupant Density, **#/1000 ft^{2a}** :	25
Area Outdoor Airflow Rate in Breathing Zone, **$R_A$cfm/ft^{2a}** :	0.12
Exhaust Airflow Rate, **cfm/ft^{2a}** :	0.6

-Mechanical exhaust id required and recirculation is prohibited except that recirculation shall be permitted where the resulting supply airstream consists of not more than 10 percent air recirculated from these spaces.

- For nail salons, the required exhaust shall include ventilation tables or other systems that capture the contaminants and odors at their source and are capable of exhausting a minimum of 50 cfm per station.

Source: IMC Sec.502.20 Manicure and Pedicure Stations Maicure and Pedicure Stations shall be provided with an exhaust system in accordance with 403.3.1.1, Note h

Note h is as follows: “for nail salons, each manicure and Pedicure stations shall provided with a source capture system capable of exhausting not less than 50 cfm per station ...

Disclaimer: Always check Federal, State specific ordinances and Local codes.

Features and Installation Guide

Intelligent Spa System (Auto Fill) - Optional

OPTIONAL AUTO FILL

iFill5 Features

- Complete spa controller with intelligent automatic fill features.
- Digital water temperature and session elapsed time display.
- Volume setting from 1 to 10 gallons.
- Can be used with or without disposable liners.
- 3 switched and 1 continuous outlet.
- Drain pump-controlled outlet with timer.
- Heavy duty industrial graded brass water valve and flow sensor package.
- Can be operated in both automatic or manual modes.
- Built-in 1-hour timer.
- Reliable, simple and easy to use.
- 120VAC, 60Hz (2 Amps max per outlet).
- **UL Recognized**

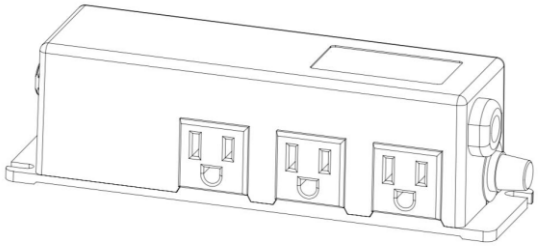

Master Control Box
Model L0903A



Control KeyPad

Installation Guide

I) Overall System Integration

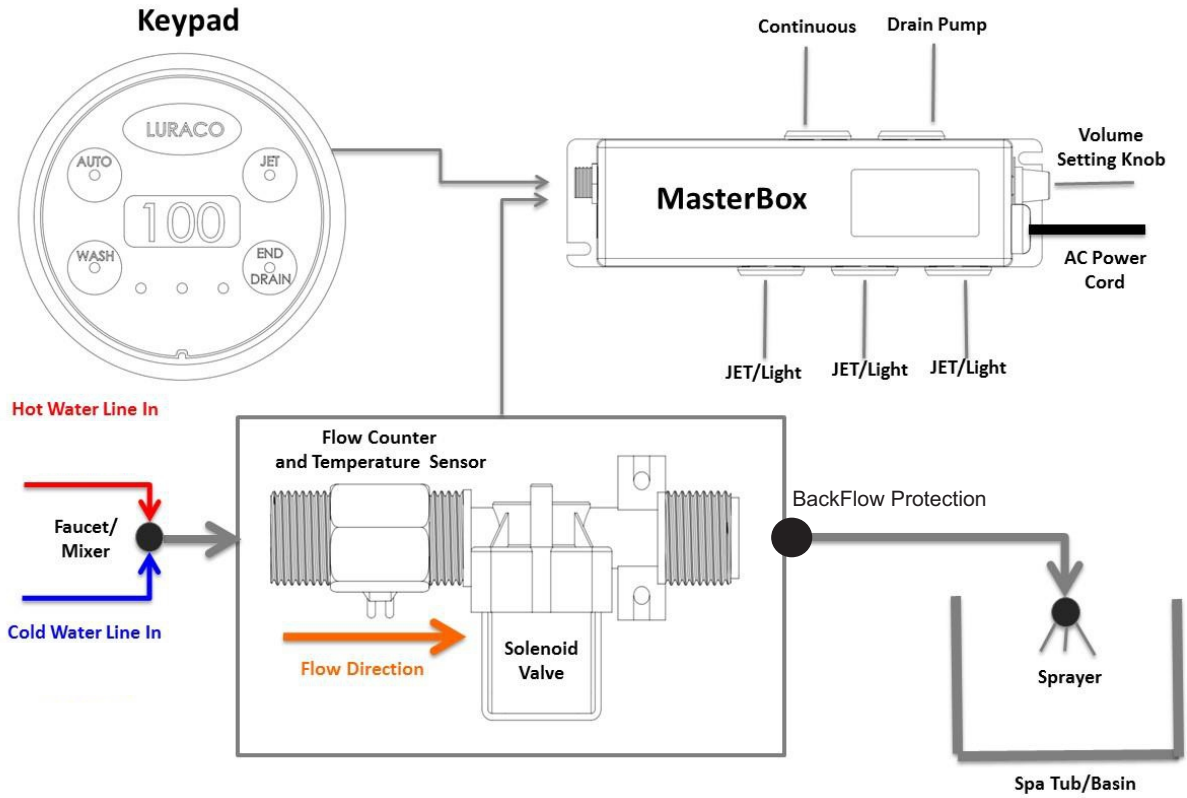

Fig1: Connection Diagram

Attention: All J&A Pedicure Spa equipped with Backflow Protection prevent water contamination (see Manual) if Local or State required specific Backflow Protection Device, the owner must be installed according to the local and State requirement.

II) System Installation

Follow the steps below for iFill 5 installation

a) Connect the Flow Sensor/Water Valve Package to the output of water mixer/faucet. Be sure the water flow direction is correct.
b) Connect the Control Keypad and Flow Sensor/Water Valve Package to MasterBox

Automatic Fill Volume Setting:

The volume of each Auto iFill can be set by the knob located next to the power cord on Masterbox. Depending on the knob position, water valve shuts off when water volume reached the set value.

How To Change the Temperature Unit (Fahrenheit or Celsius):

Be sure all buttons on keypad are off, press and hold the END/DRAIN button for 5 seconds until F or C is displayed on the keypad.

III) How to operate the iFill 5 (Be sure that the faucet is open)

ATTENTION: BEFORE PRESSING AUTO iFILL BUTTON, BE SURE PREVIOUS SESSION IS COMPLETE AND DRAIN OUT WATER IN THE BASIN. TO UNLOCK THE AUTO BUTTON, PRESS END BUTTON.

- Press the Auto/iFill button to turn On or Off the Automatic fill.
- Press the JET button to turn On or Off the JET and color light manually (**1 hour timer**)
- Press the Wash button to turn On or Off the water manually (**5 minute safety timer**)
- Press End/Drain button to end the session and unlock the Auto fill button. This button will also turn on the drain pump.

Understanding The Display Screen

Fig2: Display Screen

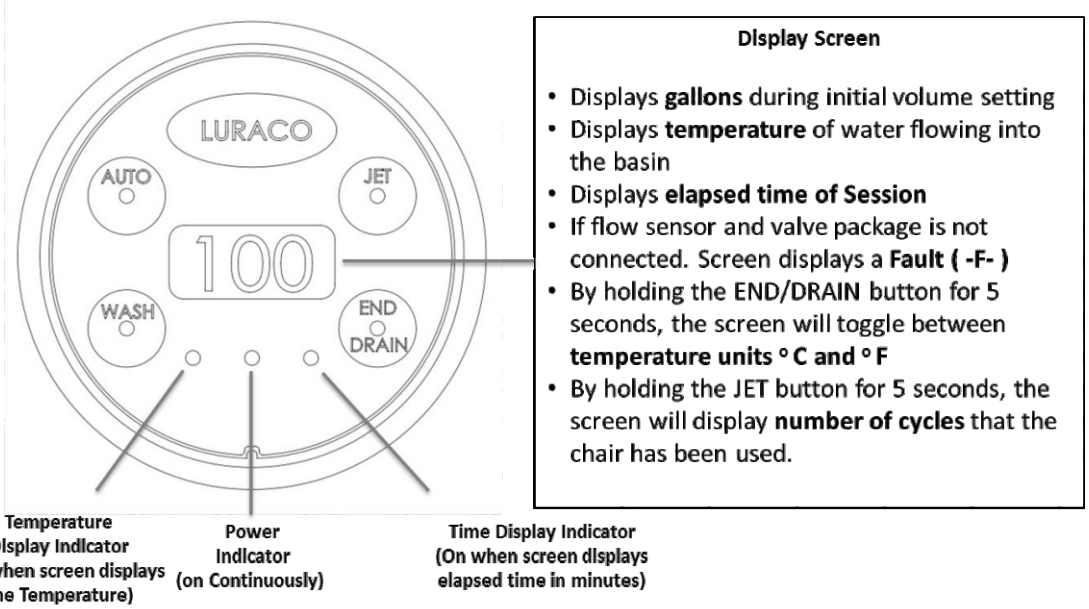

IV) How to reboot the iFill 5

Please follow the steps below

- Completely drain all water from the tub.
- Unplug the Masterbox power cord from the power outlet.
- Wait about 5 seconds and then plug power cord back into the power outlet.

Magna - Jet (Optional)

Safety Instructions:
When using electrical equipment, Basic safety precautions must be followed to reduce the risk of fire, electrical shock, and injury to Persons.

1. Read and follow all instructions before using the equipment.
2. Keep electrical cord out of heavy traffic area. To avoid fire hazard NEVER place electrical cord under the rug, near heat Generating devices.
3. Always turn power off the equipment before service.
4. Do not drop or insert any object into any openings.
5. Do not operate any equipment with damaged parts.
6. Any other use not recommended by the manufacturer may cause electrical shock or cause injury to person/s.
7. Never use it outdoors
8. Do not attempt to repair or adjust any electrical or mechanical.

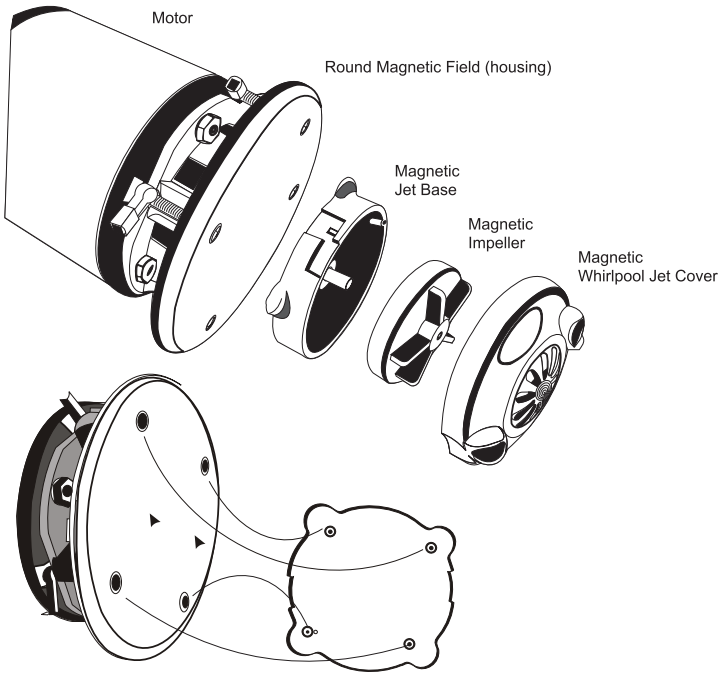

MAGNA JET Features:
1. Hydro dual massage jet stream
2. Magnetic whirlpool jet cover can be remove for quick cleaning and sanitizing.
3. Built-In electronic sensor for pump control.
4. AC Whirlpool motor (long life)
5. Very low power consumption (27W)
6. Manufactured in USA.

Cleaning Instruction:
1. Turn off the unit and wait until the motor is fully stops.
2. Hold hydro whirlpool jet cover firmly and pull to separate from the round magnetic field.
3. Turn hydro whirlpool jet cover to left to open and pull out impeller.
4. Use Anti - Bacterial solution (EPA Registered) to clean all parts.
5. After sanitize all parts, place impeller and close hydro whirlpool jet cover to turn right to lock
6. Hold firmly the whirlpool cover jet and gently place it onto the round magnetic field. Do not release the hydro whirlpool jet cover until jet cover is on the round magnetic housing.

MAGNA-JET Specifications:
Model:MAGNA-JET-120 VAC, 60HZ, 1.0Amp
Pump: Hydro-Massage Dual Air Jet Flow
Mounting: Single 3.5” Hole Diameter Auto Tighten Mounting Screws(4)

Due to continuous improvements on all our products, specification, characteristics, packing, color, designs are subject to change without notice.

How to USE Magnetic Jet!

WARNING: DO NOT RUN DRY, BASIN MUST FILLED WITH WATER TO LEVEL INDICATOR.

CAUTION: MAGNETIC JET COVER ASSEMBLY MUST ALIGN WITH DISCHARGE PORT POSITIONED AT 3/9 O'CLOCK.

When Ready to use, **MAKE** sure jet cover is positioned at 3/9 O'clock for proper whirlpool action in the basin. If jet cover is not align at 3/9 O'clock, water will splash outside of the basin.

Proper way to use Magnetic Jet System:

1. Fill the water to water level indicator.
2. Hold Magnetic Jet firmly to bring closer to the round magnetic filed and do not release the Magnetic Jet prematurely or this will cause impacts on the jet cover and the round magnetic field(housing) shortening the life expectancy of the jet cover. When the jet cover nears the round magnetic field, place jet cover onto the four dimple area (see diagram). The jet cover must align with discharge ports positioned at 3/9 O'clock.
3. When finished with client, DO NOT remove Magnetic Jet until motor is fully stopped.
4. When motor is fully stopped, remove Magnetic Jet cover from the motor and remove jet cover and impeller for sanitation.

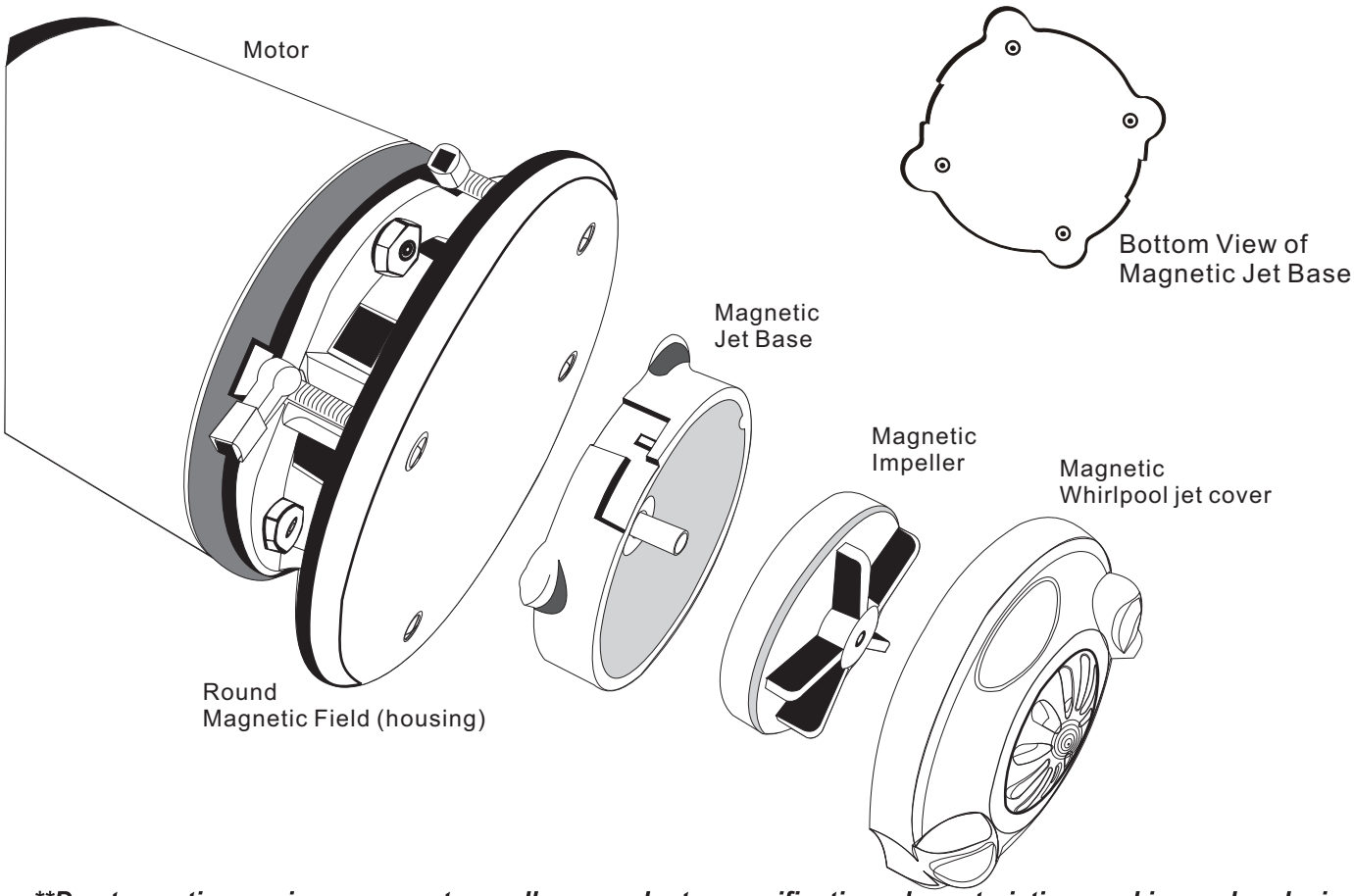

Due to continuous improvements on all our products, specification, characteristics, packing, color, designs are subject to change without notice.

Infiniti PipeLess Whirlpool Motor

STANDARD MOTOR

Safety Instructions:
When using electrical equipment, basic safety precautions should always be followed to reduce the risk of fire, electrical shock, and injury to persons, including the following:

1. Read and follow all instructions before using the equipment.
2. Keep the cord out of heavy traffic area. To avoid fire hazard NEVER put the cord under the rugs, near heat generating devices.
3. Always turn off the equipment before servicing.
4. Do not drop or insert any object into any openings.
5. Do not operate any equipment with a damage parts.
6. Any other use not recommended by the manufacturer may electrical shock or injury to persons.
7. Never use outdoors
8. Do not attempt to repair or adjust any electrical or mechanical functions on the unit.

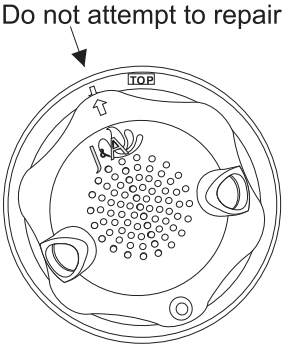

Close Jet Cover
1. Align an arrow line
2.Turn to right (Top indicated)

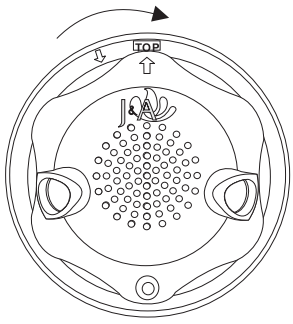

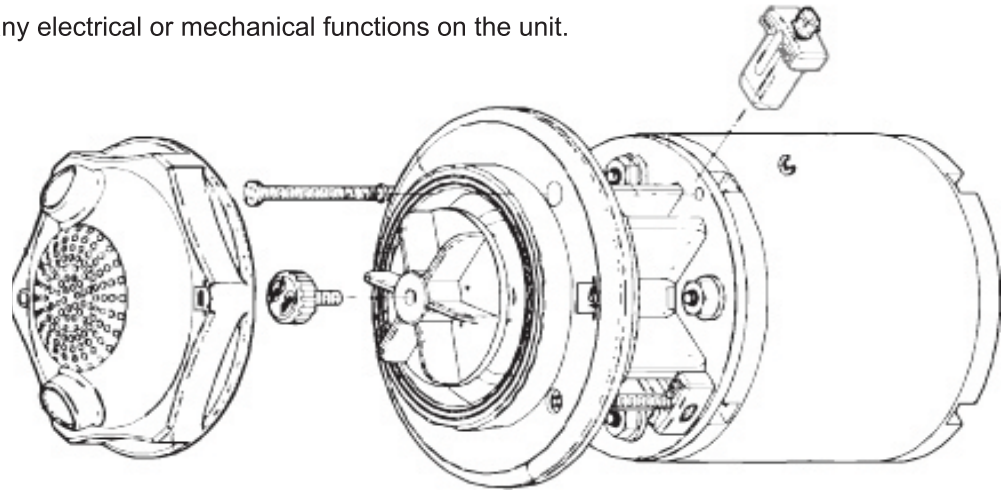

Features:
1. Dual powerful massage jet-streams
2. Jet assembly can be attached from the pump for quick cleaning and sanitizing.
3. Thermally Protected
4. AC motor (long life)
5. Extremely low power consumption .

Cleaning Instruction:
1. Turn the unit off and wait until the motor is fully stops.
2. Remove the front jet cover and notice the locking screw in the center
3. Remove the locking center screw (Indicated an Arrow) and pull out impeller from housing.
4. Use Anti-Bacterial solution (EPA Registered) to clean all part/s.
5. After sanitation, place impeller onto the motor shaft and fasten with center locking screw (Opposite arrow)

Ultra Pipeless Jet Whirlpool Motor Specifications:
Model: CS-0216A-MT
Rating: 120VAC / 60Hz, 0.4A - thermally Protected
Pump: Dual whirlpool Jet Flow
Mounting: Single 3.5” hole Diameter
Auto tighten Mounting screws(4)

*****Due to continuous improvements on all our products, specification, characteristics, packing, color, designs are subject to change without notice.***

Empress XO Footrest and Back Frame Assembly

*Content

a) Pre- Assembled Footrest mechanism
& Cushion with shower holder

b) 2 phillip x screws

Recliner Piston End Attachment Instruction

1. Remove Clevis pin from recliner piston end and make sure it is in horizontal position.
2. Slowly raise up the backrest to aligned with recliner piston.
3. Insert Clevis Pin into the backrest bracket through recliner piston and secure with locking pin.

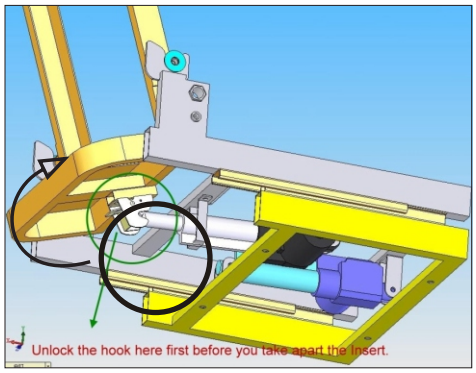

Pull latch upward to release

Detachment of Backrest

Pull latch lever upward to release from recliner piston.
As arrow indicates, bring backrest to fold onto the seat.
Disconnect all cables (recliner, slider).

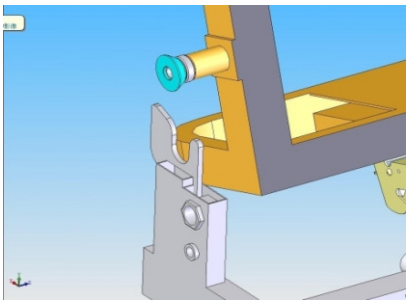

The pivot of back insert is removable

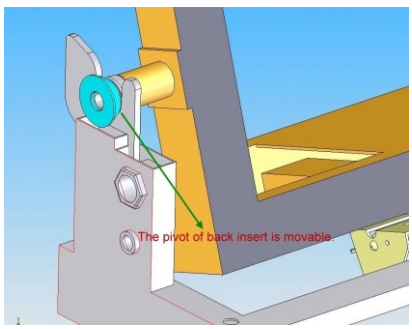

Before Operating the chair upon attachment, Check following items to ensure proper operation.

1.

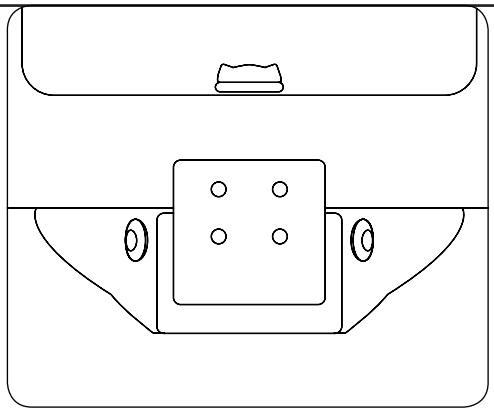

Remove 4 philips screw from FootRest stand.

2.

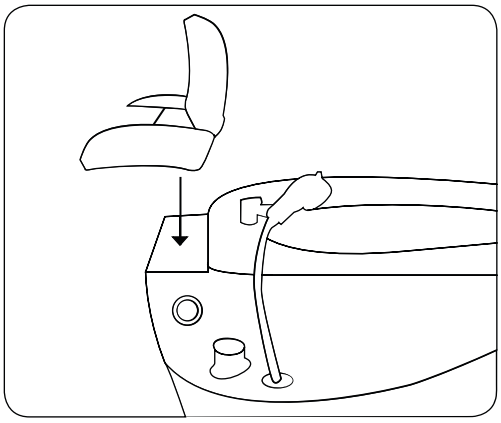

Placed Pre-Assembled on top of Footrest stand: Align 4 holes.

3.

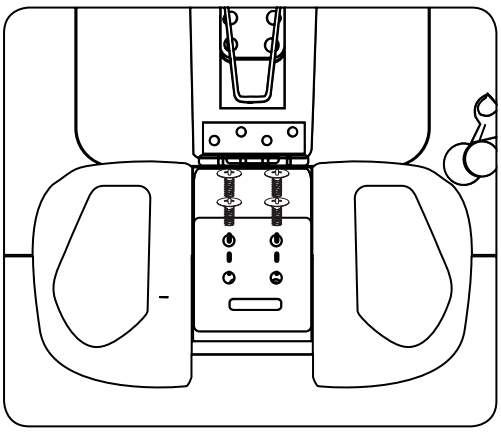

Screw in one at a time(Don't tight) All screws in place

4. Rotate shower holder(Top should be larger than Bottom)

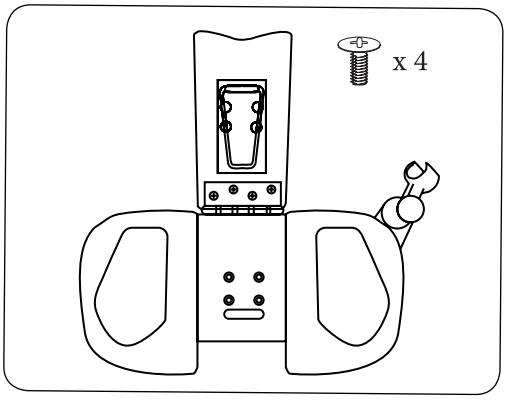

Empress XO: Remote Function

Remote Control Operation

Please see KT-RKY-1108 Spa Massage Operational Manual for details
(Keep Massage Chair Manual for future reference for identifying PARTS and Functions.)

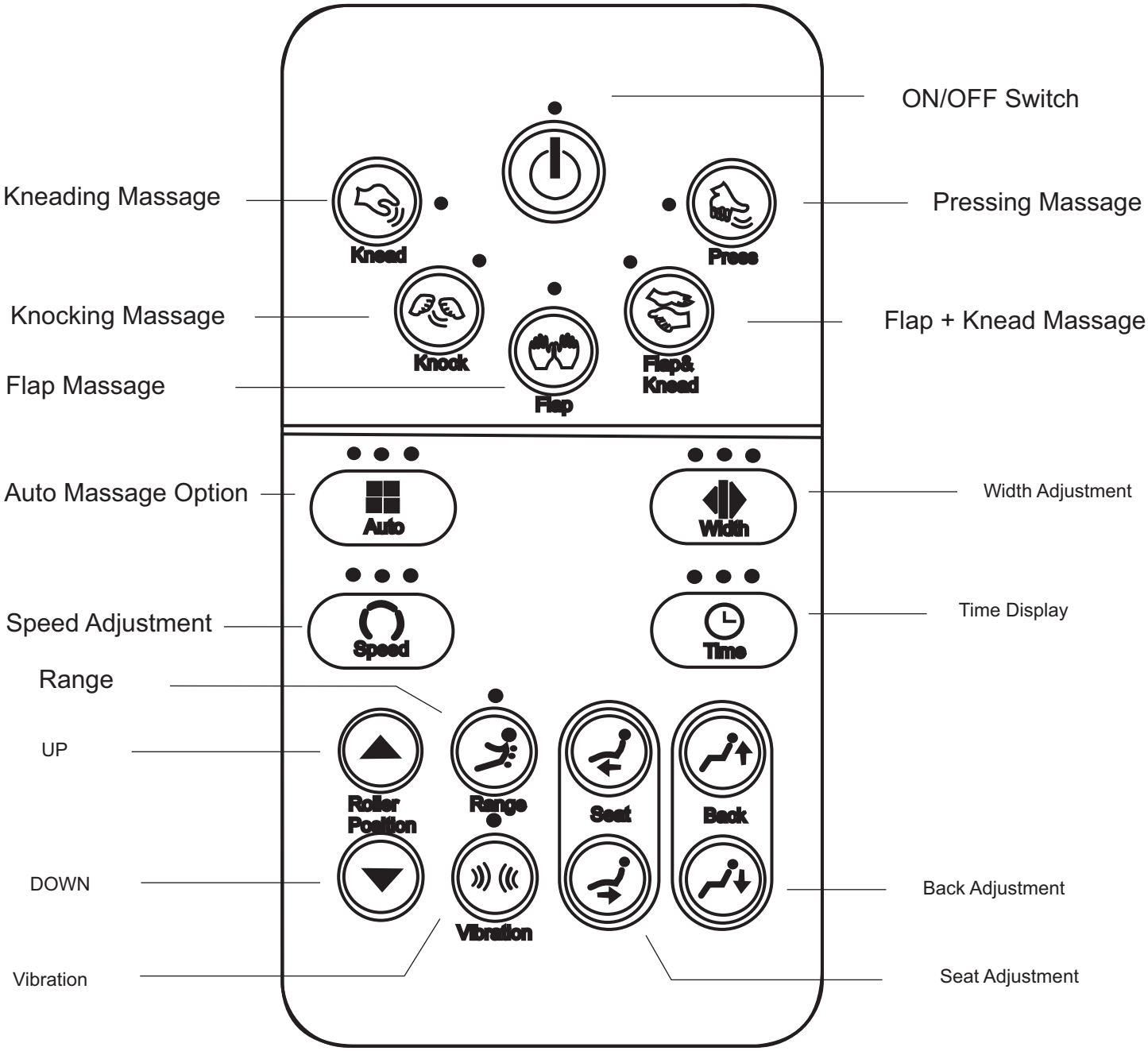

Due to continuous improvements on all our products, specification, characteristics, packing, color, designs are subject to change without notice.

Empress XO Massage Mechanism

Massage Mechanism Exposed View

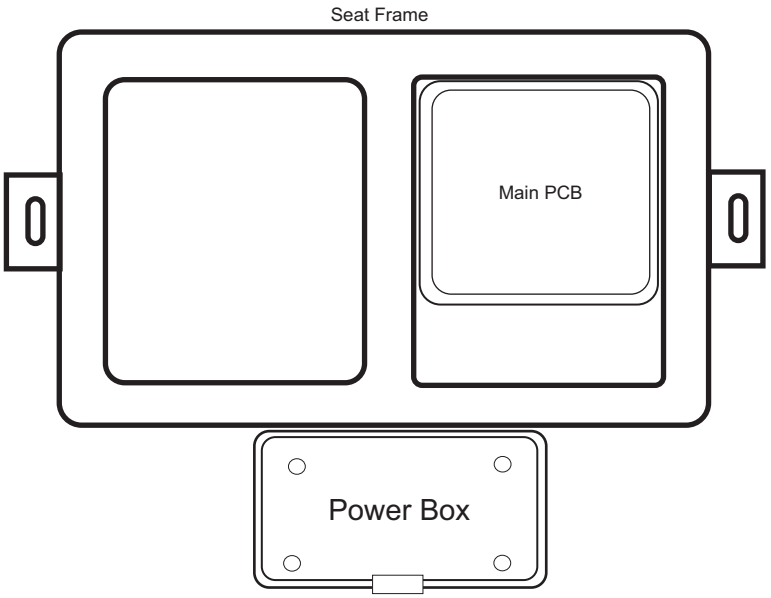

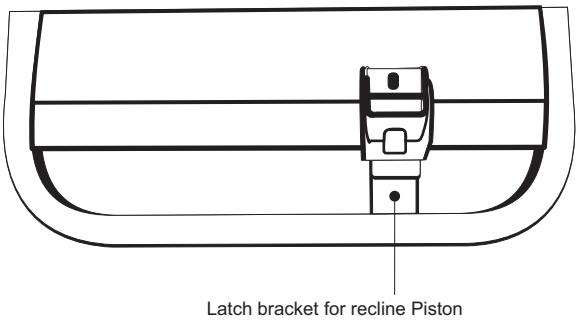

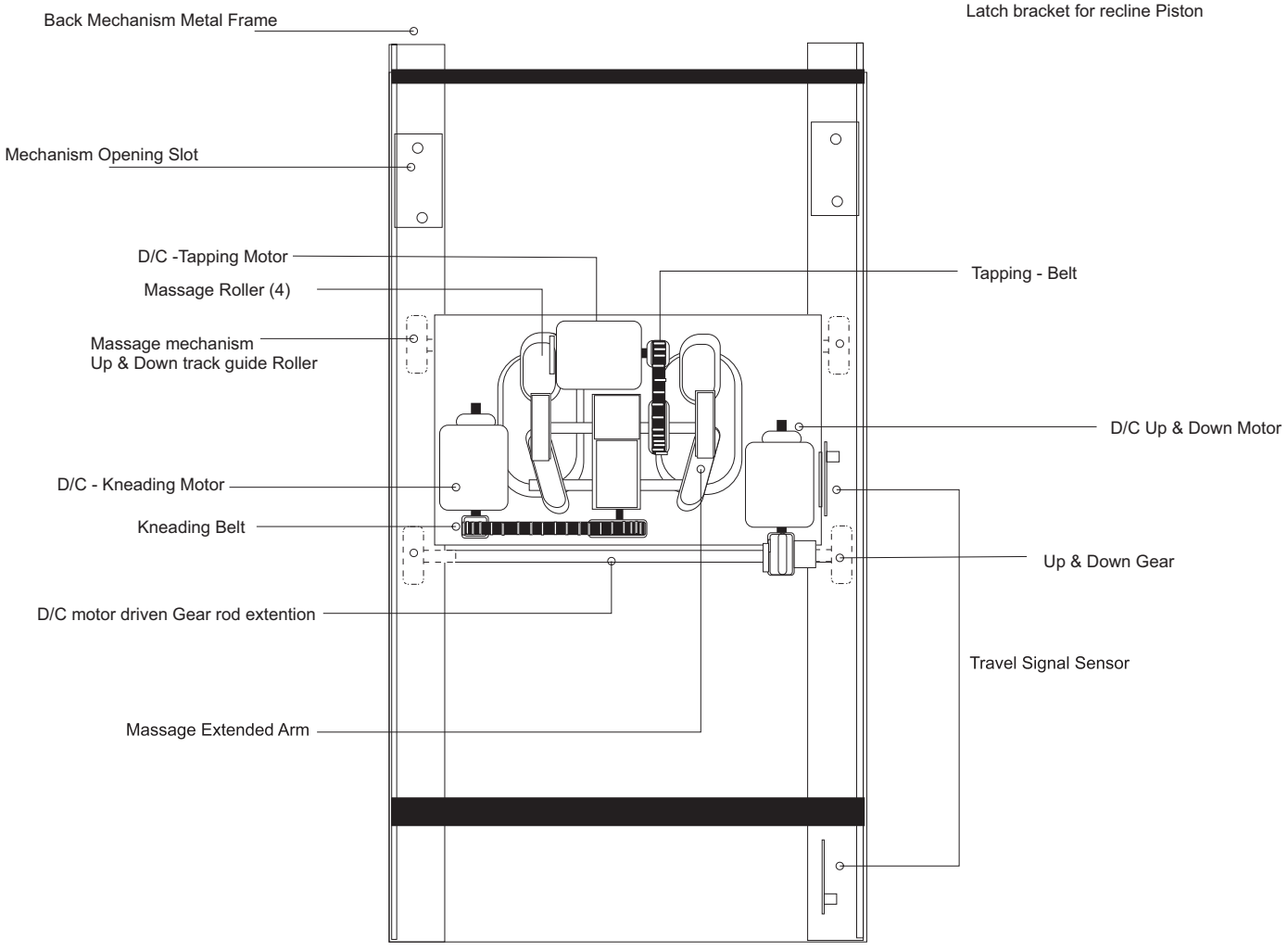

Due to continuous improvements on all our products, specification, characteristics, packing, color, designs are subject to change without notice.

Empress XO TROUBLE SHOOTING GUIDE

Can't Operate the Massage Chair (No Power)

* Power electrical cord securely connected plug in outlet.

* Power Key is still on OFF mode - Turn ON Remote Power (RED light)

* Moving Massage roller is on the way of resting location. The Massage function will activate when the Massage roller at resting location.

* Electrical Power cord wire or Plug is broken. It should be replaced by manufacturer, appointed repairman or qualified technician.

* Fuse is broken, Please replace it with a new FUSE with same specification.

* For internal circuit troubles, Please send it to appointed repair for check

Massage roller stops working while in operation, control indicator keep flashing; Buzz gives out continuous alarm.

1. Kneading Indicator Flash - Relative operating mechanism of KNEADING has problem.
2. Tapping indicator Flash - Relative operating mechanism of TAPPING has problem.
3. the entire course indicator Flash - Relative operating mechanism of UP & DOWN has problem.

* Over pressure and overload on the massage roller make internal circuit initiate protect main PCB or internal component.
  - Please reduce load and shut OFF the power to restart in 10 second.

* Internal Massage mechanism id damaged. the circuit may start its self protection. Please call the service.
  - Call service department for an assistance.
* Torn inner liner prevents massage roller from moving. Overload causes system to start the circuit protection function.
  - Check inner liner every 3 month of use massage chair.

Noise from massage mechanism
* Long term use may cause mechanism abrasion. Its normal.
  - Please call Service Department

Control Mechanism become too hot
* Extended use of control may generate excessive heat
  - Please call Service Department

Electrical Wire or Plug is abnormally hot.
* Immediately stop use - Turn OFF massage chair and Unplug power cord from the wall outlet.

EMPRESS

Back Flow Protection Device
(Dual Check Valve)

BACK FLOW PROTECTION DEVICE

Dec.23.2024

In accordance with applicable Local or State regulations,
Empress, The manufacturer of the pedicure whirlpool spa certifies that all models are equipped with factory installed Dual Check Valve back flow protection:

**EMPRESS

The specification of the installed device is as follows:

DEVICE NAME	DUAL CHECK VALVE BACKFLOW PROTECTION
DEVICE MANUFACTURER	NEOPERL INC. Waterbury CT.
DEVICE MODEL	JA-NPBX-112310721
DEVICE SPECIFICATION	COMPLIANCE WITH FOLLOWING STANDARD (S): AMSE A112.18.3-2002 (R2008) AND ASME A112.18.1-2012 / CSA B 125.1-12
DEVICE PRESSURE	MAXIMUM PRESSURE: 150 PSI (10 BAR) SERVICE PRESSURE : 80 PSI
DEVICE TEMPERATURE	MAXIMUM TEMPERATURE : 150F SERVICE TEMPERATURE : 90F

ALL MODELS OF PEDICURE SPA MENTIONED ABOVE ARE EQUIPPED WITH THE SUBJECT DEVICE AS STANDARD FEATURE. As for your information, indicated State requires Vaccum Breaker.

** Effective April 01 2005:
ARIZONA, CALIFORNIA, NEBRASKA, NEVADA, OREGON, TEXAS AND WASHINGTON

** Effective June 15 2005:
ILLINOIS, MINNESOTA, WISCONSIN, MICHIGAN

** Effective May 01 2007:
CONNECTICUT

For additional information, Please contact us at 631-243-5300
Very Truly yours,

Technical Support

J&A USA INC
335 Crooked Hill Road
Brentwood, NY 11717
Tel: 631.243.3336
Fax: 631.243.3339
www.jausainc.com

Limited Warranty

Pedicure Spa

IMPORTANT

To validate the limited warranty, The Limited Warranty Registration Form MUST be filled out completely and return to J&A USA within 30 days of original purchased date. This Limited Warranty is valid if J&A USA received registration form.

J&A USA Inc. Pedicure Spas has designed and manufactured with the highest standards and expressly warrant the pedicure spa as follows: To the original owner of the J&A USA Inc. Pedicure Spa may repair or replace, at its option, any pedicure spa found to be defective in material or workmanship upon inspection by a authorized representative of J&A USA Inc. This limited warranty covers the following:

Base - Twenty four (24) month from date of shipment from J&A USA facility.
Components / Parts - Twenty four (24) month from date of shipment from J&A USA facility.
Stool - Ninety (90) days from date of shipment from J&A USA facility.
Shipping Costs - Twelve (1st-12) month from date of shipment. J&A USA will cover normal shipping costs associated with replacement parts. Expedited shipping cost will incur an additional charge.
- Twelve (2nd-12) month from date of shipment associated with replacement part/s shipping will be charged.

Labor - Twelve (12) month from date of shipping, J&A USA Inc will cover reasonable labor costs associated with the installation of replacement parts found to be defective in material or workmanship upon inspection by authorized representative of J&A USA INC. **No labor cost or replacement parts will be covered under this limited warranty if at the sole discretion of J&A USA INC. it is determined a failure was caused by negligence, accident or improper use, improper installation or lack of proper maintenance as in the Owner's Manual.**

NO CONSEQUENTIAL, INCIDENTAL, CONTINGENT, INDIRECT, SPECIAL OR OTHER DAMAGES WILL BE ALLOWED. This warranty is null and void if the pedicure spa is removed from its original installation or is not installed accordance with specifications of pedicure spa or national, state or local codes, regulation and ordinances. Furthermore, this limited warranty is null and void if the pedicure spa is subjected to improper installation or maintenance, negligence, improper cleaning or any other circumstance beyond J&A's control. To validate limited warranty, pedicure spa must be installed by a licensed plumber and/or electrician in accordance with local and / or State code and pedicure spa installation instructions.

Warranty Exclusion

1- Unauthorized repairs and/or modification or tampered in any way.
2- Damage due to freight, accident, natural disaster and /or abuse or misuse
3- Stain, fading or discoloration of seat, back cover, armrests (Upholsteries), Tray or Footrest
4- Fading, discoloration or staining of basin or Any portion of surface of pedicure spa caused by water additive or improper water treatment (such calcium built up) and/or cleaning agents/s
5- Damage or malfunction due to improper installation including but not limited to, failure to comply with all national, state and local plumbing, electrical and building codes.
6- Magnetic jet assembly (base, impeller and cover)
7- Damage drain pump due to residue built up in drain pipe and / or due to the lack of maintenance.
8- Damage resin / glass bowl break from impact or Maintenance Negligent.

Parts for which labor / Service is NOT COVERED - Following components are simple to replace and DO NOT require a service technician. Therefore, though the part is covered under the guidelines of the warranty agreement.

1- Panel
2- Jet cover, impeller and / or jet assembly
3- Faucet Cartridge, Shower Head
4- Footrest
5- Air actuate On/Off Button
6- Drain Plug
7- Remote control

During the Limited Warranty period, J&A will, at its sole discretion, repair or replace any defective component. All component parts removed under this Limited Warranty become property of J&A USA Inc. And all replacement component /s MUST be return to J&A USA Inc. within 20 days of replacement. If not, replaced component/s will be charge as its cost/s.This limited warranty is for the original owner and **not** transferable. The original owner agrees by using pedicure spa the obligation of J&A USA shall not extend to indirect or contingent damage or injury. Furthermore, the obligations of J&A are limited to those set forth herein. The limited warranty is the exclusive remedy and is in lieu of all other warranties, express or limited, including but not limited to, any implied warranty of fitness or merchantability for a particular purpose. No distributor or other person has the right or authority to bind J&A USA INC to changes to this limited warranty. Consequently, J&A USA INC is **not** responsible for such warranties or representations.

Limitation of liability

TO THE EXTENT ALLOWED BY LOCAL LAW, EXCEPT FOR THE OBLIGATIONS SPECIFICALLY SET FORTH IN THIS WARRANTY STATEMENT, IN NO EVENT WILL J&A OR ITS THIRD PARTY SUPPLIERS BE LIABLE FOR ANY DAMAGED CAUSED BY J&A'S PEDICURE SPA OR THE FAILURE OF J&A PEDICURE SPA INCLUDING ANY LOST PROFIT OR SAVINGS, BUSINESS INTERRUPTION, LOSS OF USE OR ANY OTHER COMMERCIAL OR ECONOMIC LOSS OF ANY KIND, OR SPECIAL, INCREMENTAL, OR CONSEQUENTIAL DAMAGES. THIS LIMITATION OF LIABILITY APPLIES WHETHER DAMAGES ARE SOUGHT, OR A CLAIM MADE, UNDER THIS LIMITED WARRANTY OR AS A TORT CLAIM, A CONTRACT CLAIM OR ANY OTHER CLAIM.

Limited Warranty Registration Form

Important

To validate the limited warranty, The Limited Warranty Registration From MUST be filled out completely and return to EMPRESS within 30 days of original purchased date. This Limited Warranty is valid if EMPRESS received registration from.

Serial No

Salon Phone Number

Salon E-Mail Address

Cell Phone Number

First Name

Last Name

Date of Purchase (mm/dd/yyyy)

Salon Address

City

State

Zip Code

Name of Distributor

City

State

Zip Code

Completed Warranty Registration Form to:

EMPRESS

Mail: 335 Crooked Hill Road,Brentwood N.Y 11717
Fax: 631.243.3339
Email: Info@Toepia.com

Questionnaires (We value your voice!)

1. Are you satisfy with Pedicure Spa received? Yes: ☐ No: ☐
2. Are you currently using EMPRESS product/s? If so, How long? Yes: ☐ No: ☐ ☐☐ Year/s
3. If not, What other product?
4. What is the most important features in choosing pedicure Spa? Brand ☐ Design ☐ Function ☐ Service ☐ Price ☐ Other ☐
5. How long in business? ☐☐ Year/s
6. How often are you remodel you Salon? ☐☐ Year/s
7. Would you purchase EMPRESS product in the future? Yes: ☐ No: ☐
8. Do you want to receive a promotion by email? Yes: ☐ No: ☐
9. Any suggestion or Comment _____

The Source for Pedicure Spas

Copyright 2025 by J&A USA Inc.

Printed in USA

J&A USA, INC

335 CROOKED HILL RD., BRENTWOOD, NY 11717

631.243.3336 - WWW.JAUSAINC.COM

SCAN ME
www.jausainc.com

SERVICE & ORDER PARTS

631.243.5300 - WWW.TOEPIA.COM

SCAN ME
www.pedispafix.com