LINSY 林氏家居

安装示意图/Assembly Instruction

产品名称 Model NO.	TV2G-A 0.8m
产品规格 Specification	796*348*300mm
安装工具 Tool	安装人数 Installer

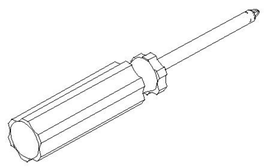

冲击钻
Percussion drill

胶锤
Rubber hammer

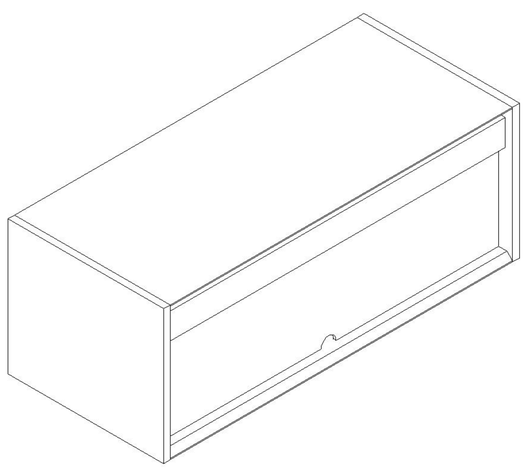

五金表/Hardware list

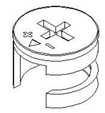

(A)＊17
大三合一锁饼(15mm)
Three-in-one large lock

(B)＊17
二合一螺杆(35mm)
2-in-1-screw

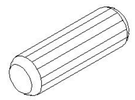

(C)＊ 8
木榫Ø8x30mm
wood tenon

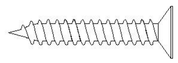

(D)＊ 3
自攻螺丝M4x25mm
Self-tapping screw

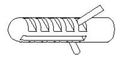

(E)＊ 3
膨胀胶粒
Expanded colloidal particle

(F)＊ 3
镜钉
Mirror nail

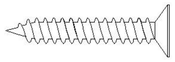

(G)＊14
自攻螺丝M4x20mm
Self-tapping screw

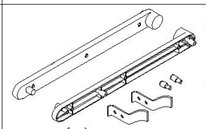

(H)＊ 1
隐藏两节导轨
Hide two guide rails

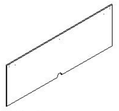

(I)＊ 1
门板亚克力
Door panel acrylic

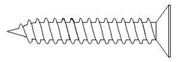

(J)＊ 3
自攻螺丝M4x40mm
Self-tapping screw

(K)*2
连接铁片
Connecting iron sheet

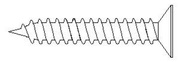

(L)＊ 4
自攻螺丝M3.5x12mm
Self-tapping screw

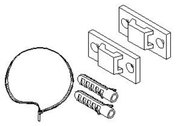

(M)*1
家具防倒器-白色
Anti-fall device

部件表/Parts List

编号NO.	名称Name	规格（mm）Specification	数量QTY	材质Material
1	面底板Bottom board	766*348*15	2	三胺板Melamine
2	背板Back board	766*270*15	1	三胺板Melamine
3	右侧板Side board(R)	348*300*15	1	三胺板Melamine
4	左侧板Side board(L)	348*300*15	1	三胺板Melamine
5	饰条Decorative strip	762*58*15	1	三胺板Melamine
6	挂条Hanging board	762*58*15	2	三胺板Melamine

TV2G-A 0.8m

安装方法/ Installation method

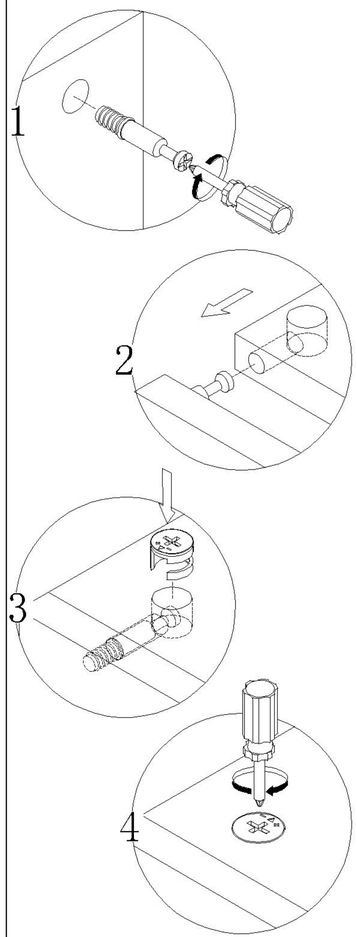

大二合一
two-in-one

1

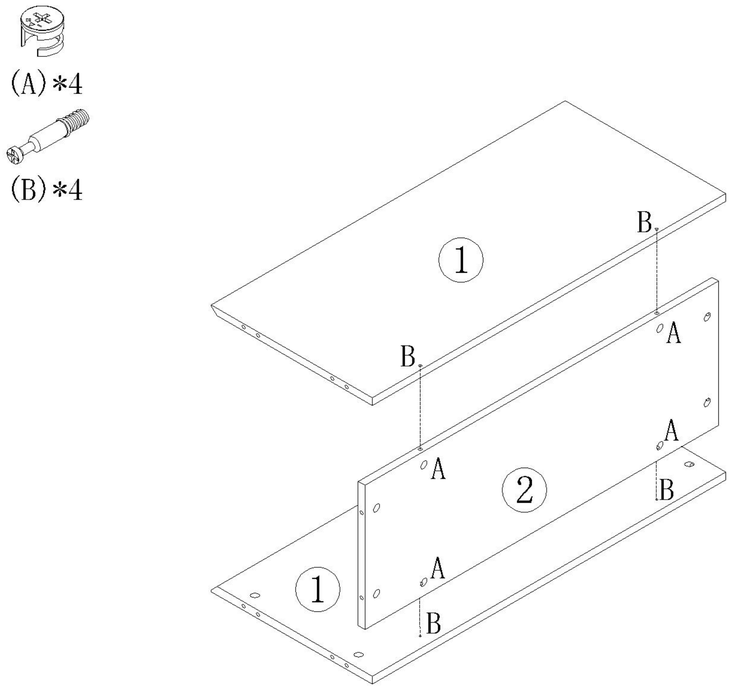

2

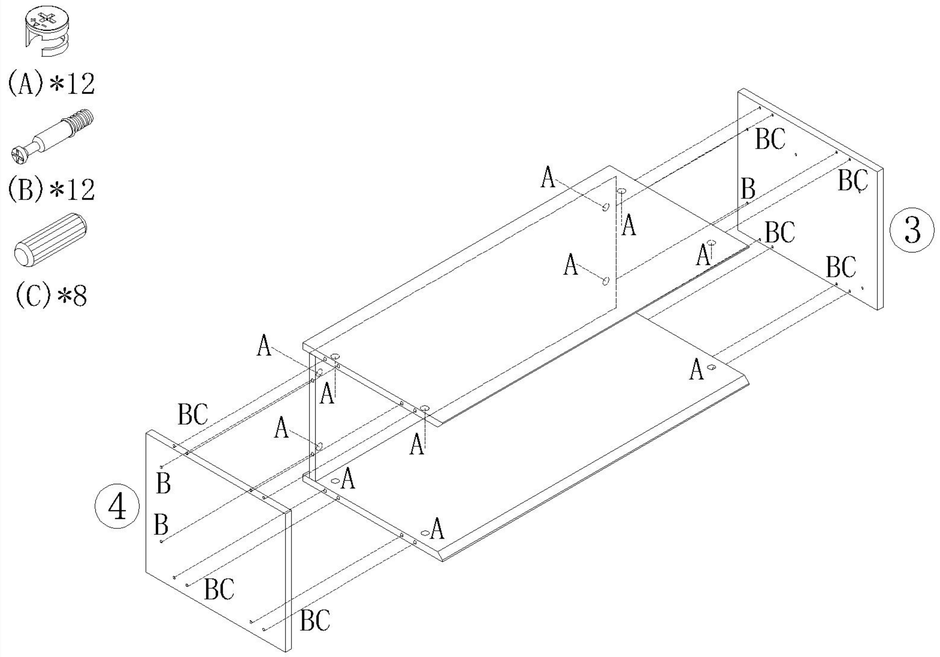

3

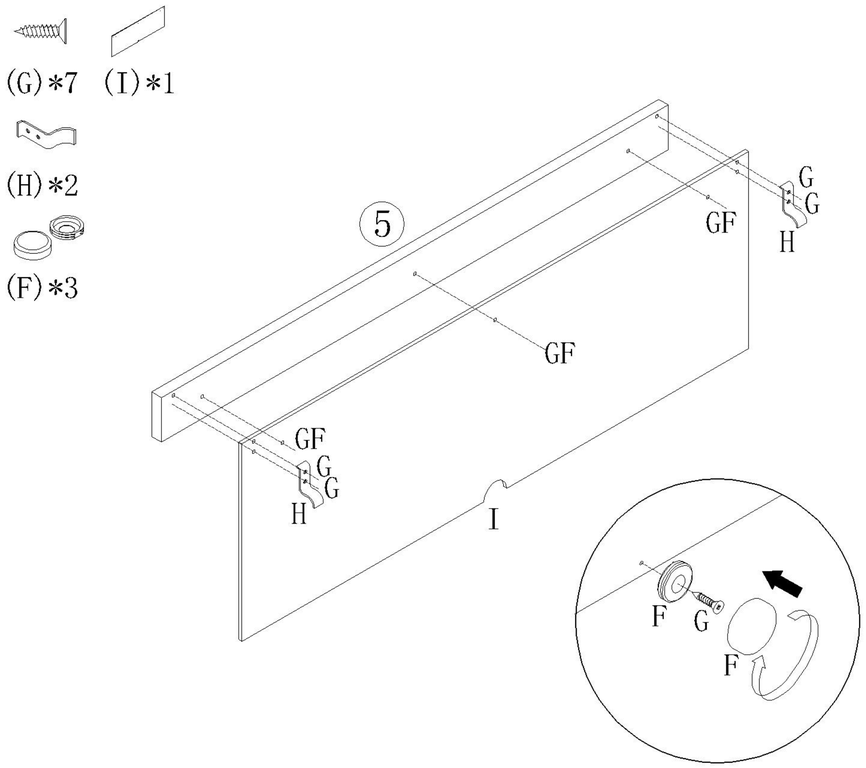

4

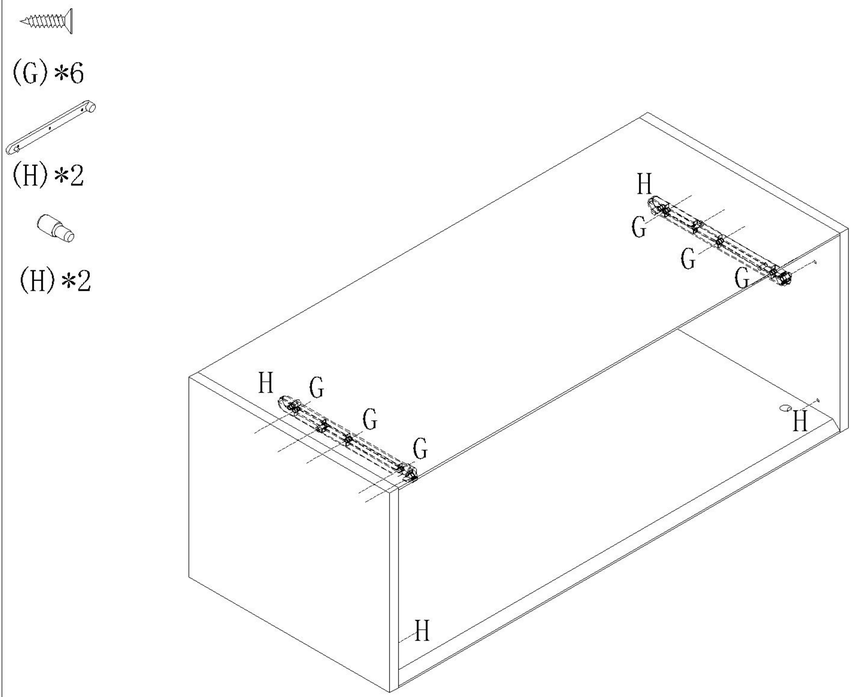

TV2G-A 0.8m

安装方法/
Installation method

5

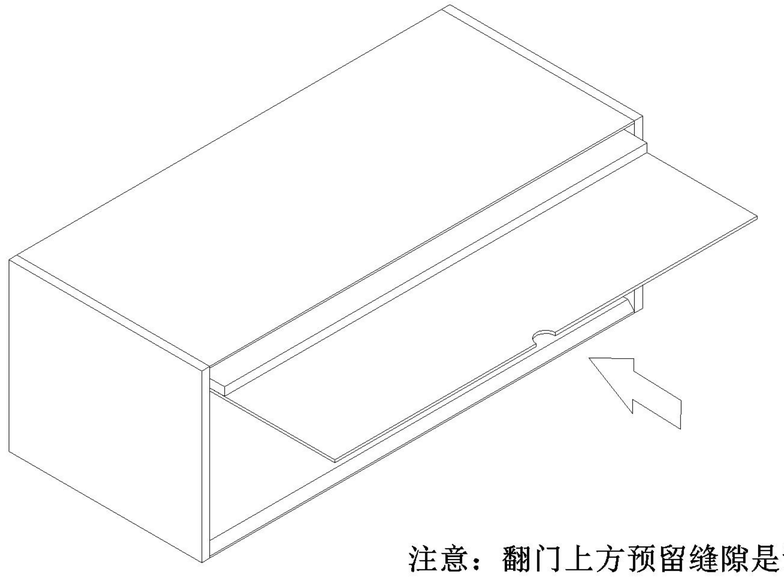

注意：翻门上方预留缝隙是设计用于翻门转动的空间，小心夹手，
Note:The reserved gap above the door is designed to turn the door, be careful not to pinch your hands.

6

(D)*3

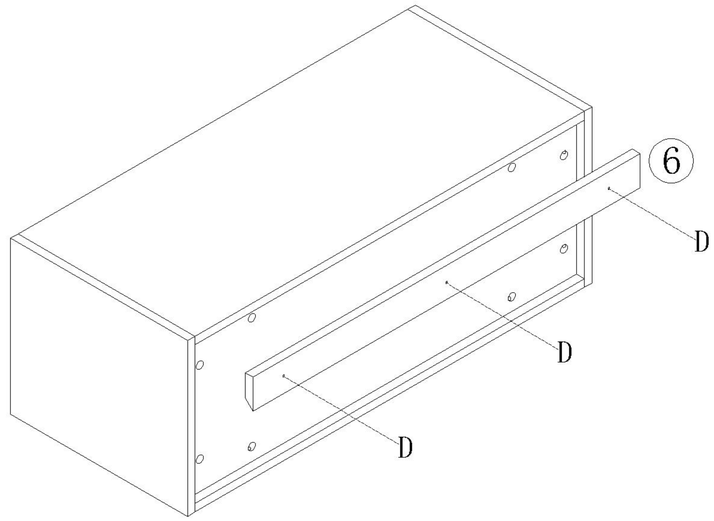

注意!
挂条方向，斜边朝下
Pay attention to the direction of the hanging plate, with the beveled edge facing downward

7

(E)*3

(J)*3

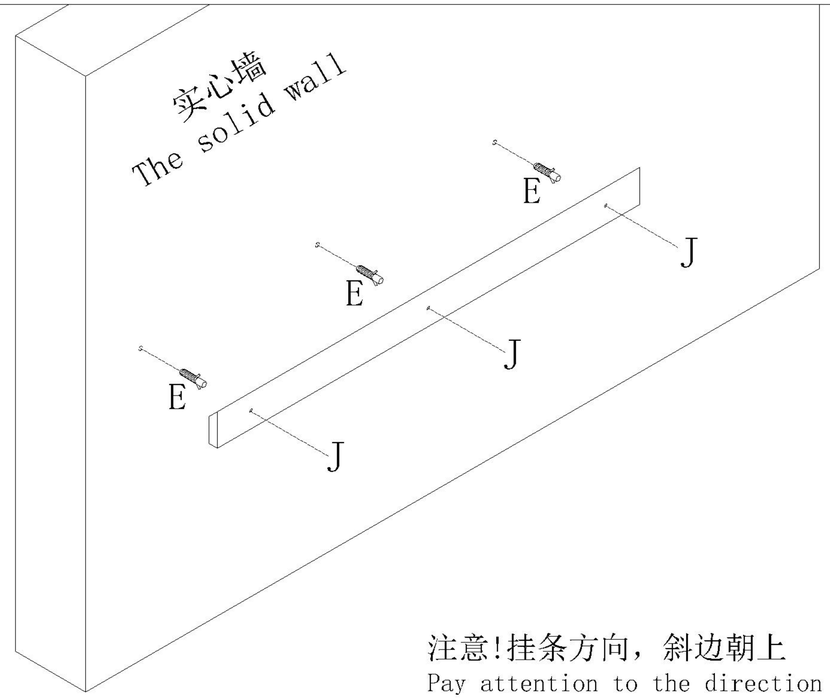

注意：实心墙厚度应不少于120mm，谨防打穿
Note: The thickness of the solid wall should not be less than 120mm to prevent penetration

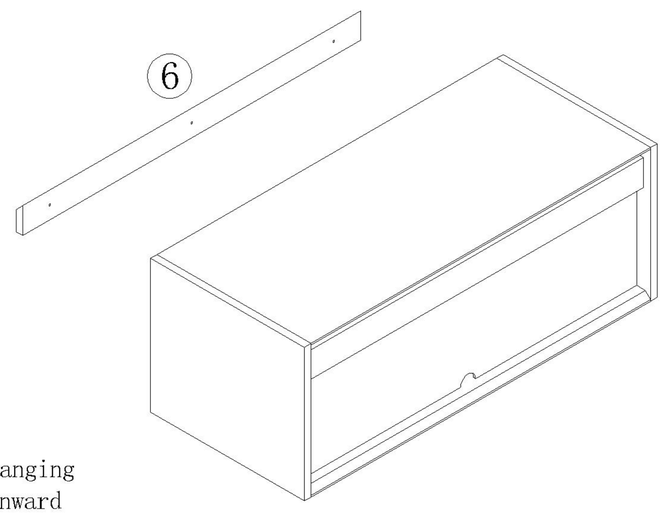

注意!挂条方向，斜边朝上
Pay attention to the direction of the hanging plate, with the beveled edge facing downward

TV2G-A 0.8m

安装方法/
Installation method

(K)*2

(L)*4

8

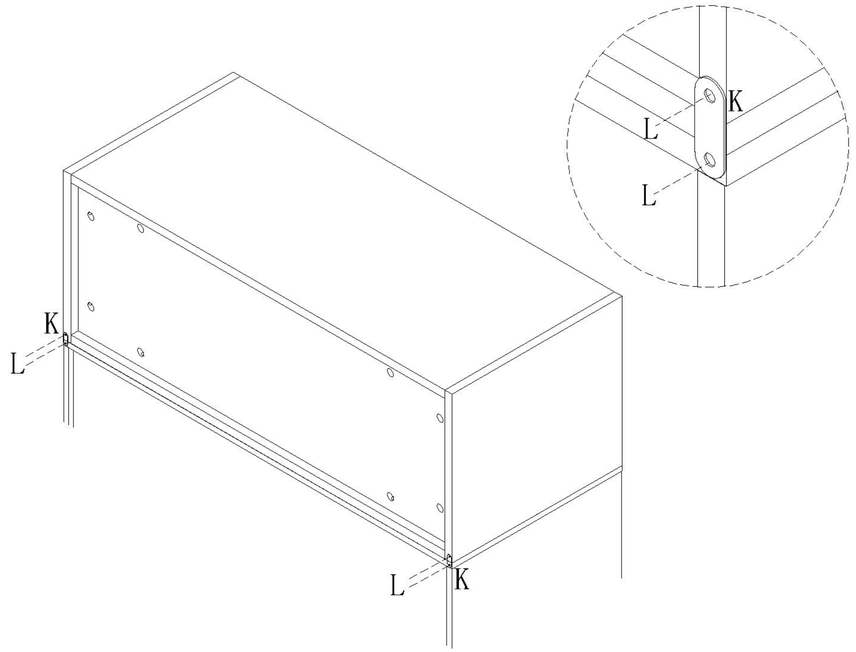

如购买下柜用五金KL锁紧
If purchasing the hardware KL for locking the lower cabinet

9

TV5E-A 翻门斗柜0.8m
TV5E-A flip door bucket cabinet 0.8m

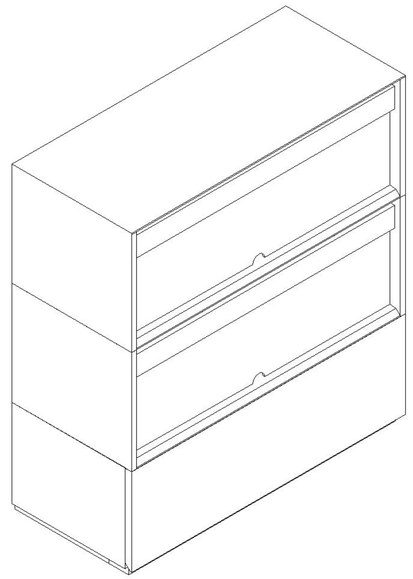

购买此搭配需安装防倒器
To purchase this combination, an anti fall device needs to be installed

规格specifications:798*349*884mm
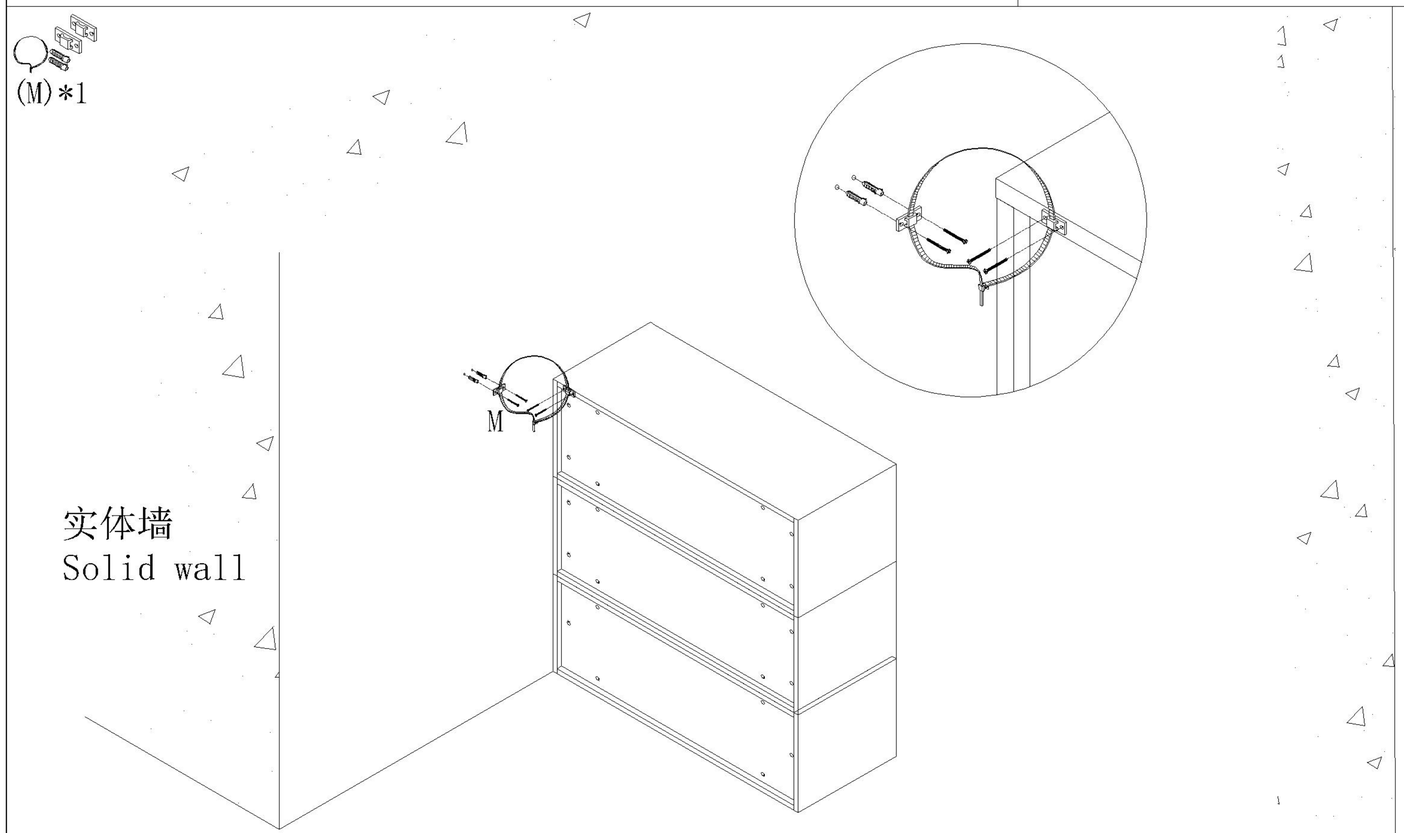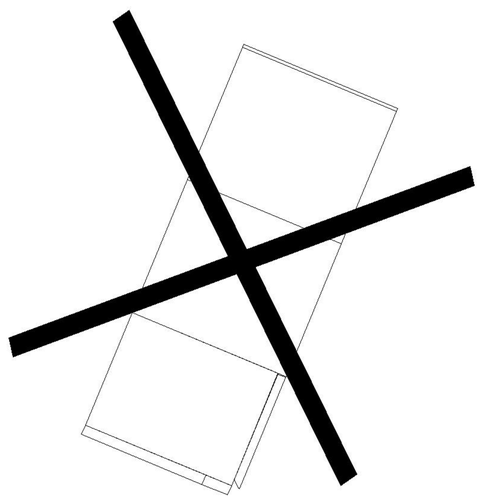
(M)*1