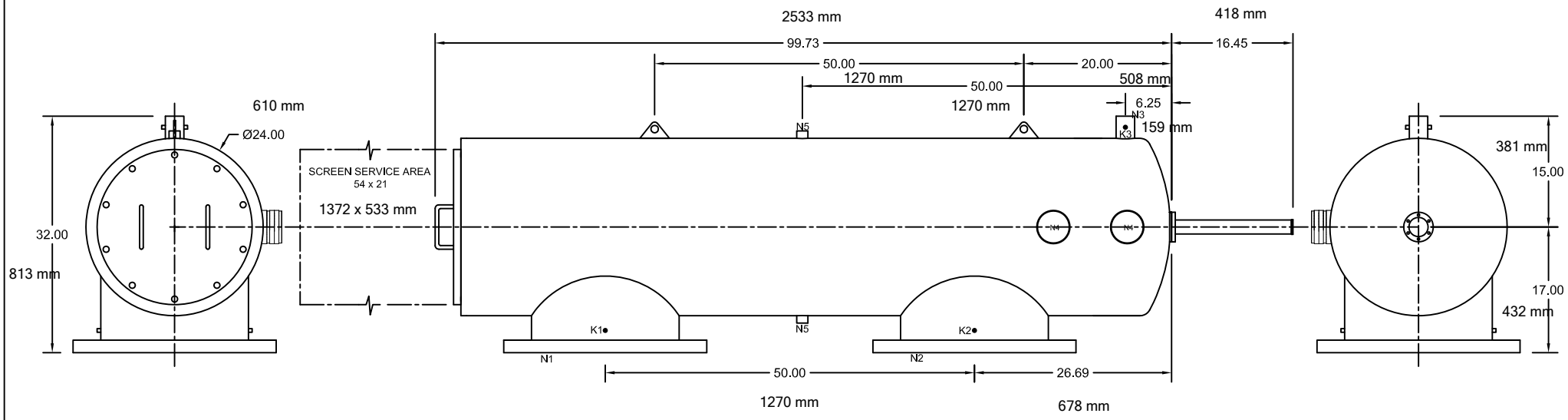

NOZZLE	DESCRIPTION	SIZE	QTY
N1	INLET	20" 150#	1
N2	OUTLET	20" 150#	1
N3	FLUSH OUTLET	2" FNPT	1
N4	SERVICE PORT	4" VIC	2
N5	COUPLING	1" FNPT	2
K1	HYD CONNECTION	¼" FNPT	2
K2	HYD CONNECTION	¼" FNPT	2
K3	HYD CONNECTION	¼" FNPT	2

FILTER PERFORMANCE

MAX FLOW RATE (m^3/h)	1022
SCREEN AREA (cm^2)	16723
MAX TEMP. (°C)	93
MAX PRES. (bar)	10
VESSEL WEIGHT (kg)	544

UNLESS OTHERWISE SPECIFIED
DIMENSIONS ARE IN INCHES
TOLERANCES
DECIMALS ANGULAR
.XX ± .05 ± 0.5 DEG.
.XXX ± .01

FORSTA FILTERS
Self Cleaning Water Filters

G20-180

SIZE	FSCM NO.	DWG NO.	REV
		G20-180	0

SCALE		SHEET
3.50		1 of 1