CONTACT US @ *855-355-2724*
E-Mail: Sales@brahelectric.com
www.Brahelectric.com

PRODUCT DATA SHEET

Shunt Trips

Picture is for reference only,
Actual Kit may vary slightly

PART NUMBER- BE-TSST13L:

BE-TSST13L, General Electric, Power Break I, type TSST, shunt trip, 480/600V, left pole mounted,2500 amp – 4000 amp insulated case frame, suitable for use with TPS, THS, TPSS, THSS circuit breaker frame types, direct Substitute shunt trip for General Electric OEM TSST13L.

PRODUCT SPECIFICATIONS

Manufacturer	BRAH Electric
Sub-Category	Shunt Trips
Family	Power Break I
Type	TSST
Type For	TPS, THS, TPSS, THSS
OEM Manufacturer	General Electric
OEM Part Number	TSST13L
Control Voltage Min	480
Control Voltage Max	600
Amperage Max	4000

Warranty: All Products sold by BRAH Electric are guaranteed to be free of defect for a period of two years, under the condition that the product has been installed and operated properly. All items proven defective within the one year period will be replaced by BRAH Electric. In the event that we cannot provide a direct replacement, your monies will be refunded in full. We are not responsible for any consequential losses or damages outside of the defective product as well as any replacements or repairs performed by another party without our written authorization from BRAH Electric.

NOTES:

FOR MATERIAL INFORMATION SEE SEPERATE DRAWING

REVISIONS				
ZONE	REV.	DESCRIPTION	DATE	APPROVED

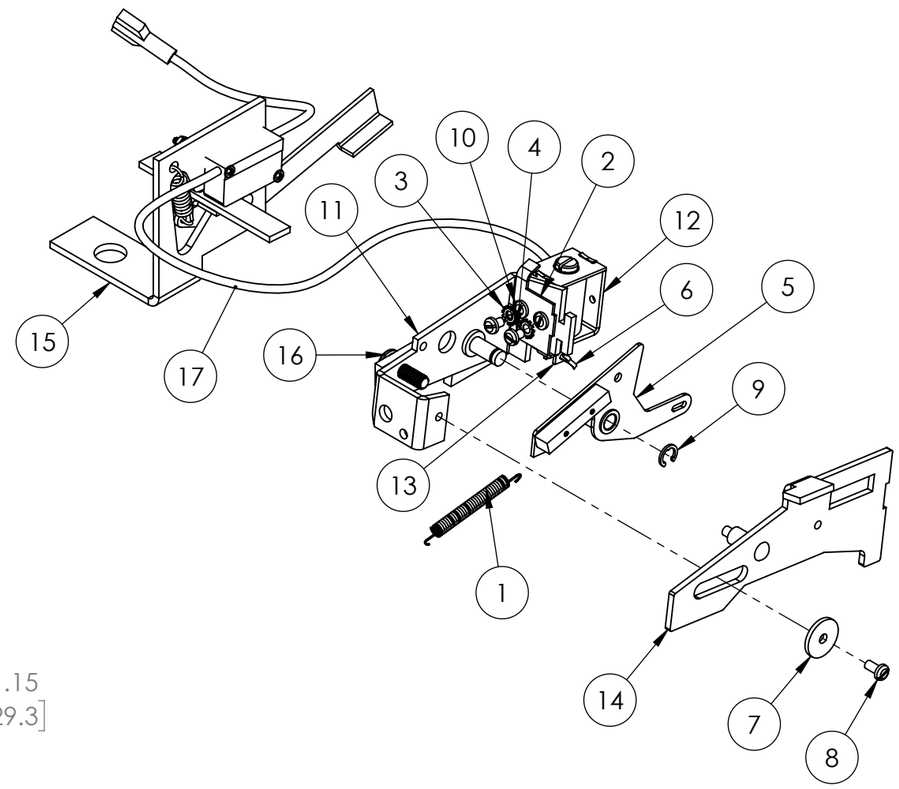

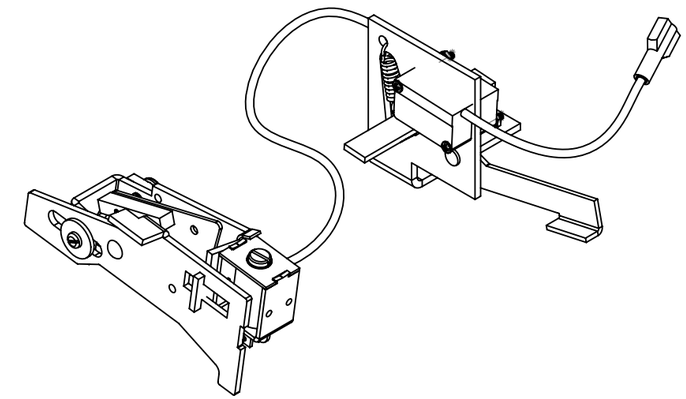

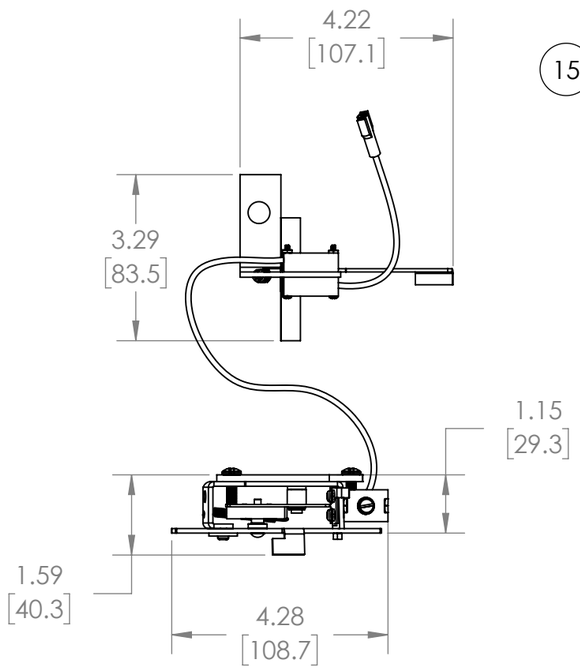

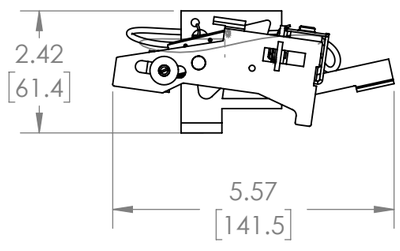

ITEM NO.	PART NUMBER_DESCRIPTION	QTY.
1	TENSION SPRING	1
2	102050-004_SUPPORT BRACKET SOLENOID	1
3	GEAR WASHERS M3	2
4	SCREW M3 x 0.5	4
5	102070-101_MIDDLE PLATE ASSEMBLY	1
6	102070-012_DOWEL PIN	1
7	102070-011_WASHER	1
9	102070-015_CIRC CLIP	1
10	FLAT WASHER M3	2
11	102050-101_SUPPORT BRACKET _ PLATE ASSEMBLY	1
12	SOLENOID ASSEMBLY	1
13	102070-102_BLOCK _ PIN	1
14	102050-102_SUPPORT BRACKET _ RIVET ASSEMBLY	1
15	102070-104_L- SUPPORT _ CONTROLLER ASSEMBLY	1
16	90272A830_ZINC-PLTD STL PAN HEAD PHILLIPS MACHINE SCREW	2
17	cable	1

THIRD ANGLE PROJECTION

PROPRIETARY AND CONFIDENTIAL

THE INFORMATION CONTAINED IN THIS DRAWING IS THE SOLE PROPERTY OF BRAH ELECTRIC, LLC. ANY REPRODUCTION IN PART OR AS A WHOLE WITHOUT THE WRITTEN PERMISSION OF BRAH ELECTRIC, LLC IS PROHIBITED.

UNLESS OTHERWISE SPECIFIED:

DIMENSIONS ARE IN MM
TOLERANCES:
ANGULAR: MACH± .5 DEG.
WHOLE NUMBER ± .5
ONE PLACE DECIMAL ± .25
TWO PLACE DECIMAL ±.13

INTERPRET GEOMETRIC TOLERANCING PER: ASME Y14.5M-1994

MATERIAL
REFER TABLE

FINISH
-

DO NOT SCALE DRAWING

	NAME	DATE
DRAWN		
CHECKED		
ENG APPR.		
MFG APPR.		
Q.A.		

COMMENTS:

BRAH Electric Mfg

TITLE:

BE-TSST13L

SIZE	DWG. NO.	REV
B	102050	01

SCALE: 1:2 | WEIGHT: | SHEET 1 OF 1