CONTACT US @ *855-355-2724*
E-Mail: Sales@brahelectric.com
www.Brahelectric.com

PRODUCT DATA SHEET

Bus Plugs
Picture is for reference only,
Actual Kit may vary slightly

PART NUMBER – BUV3203GNW:

BRAH Electric aftermarket 30 amp, 240 volt, 3 phase, 4 wire, with ground, fusible style bus plug, includes weather stripping for drip protection, type BUV / UV, suitable for use with OEM ITE / Siemens XL-U Series industrial busway systems, accepts Class R, H and K fuse types, direct substitute, fit and function for ITE OEM UV bus plugs

PRODUCT SPECIFICATIONS

Manufacturer	BRAH Electric
Sub-Category	Fusible
Family	XL-U
Type	UV, BUV
Wire	4
Voltage	240
Amperage	30
A/C Rating	150ka@240V
Phase	3

Warranty: All Products sold by BRAH Electric are guaranteed to be free of defect for a period of two years, under the condition that the product has been installed and operated properly. All items proven defective within the one year period will be replaced by BRAH Electric. In the event that we cannot provide a direct replacement, your monies will be refunded in full. We are not responsible for any consequential losses or damages outside of the defective product as well as any replacements or repairs performed by another party without our written authorization from BRAH Electric.

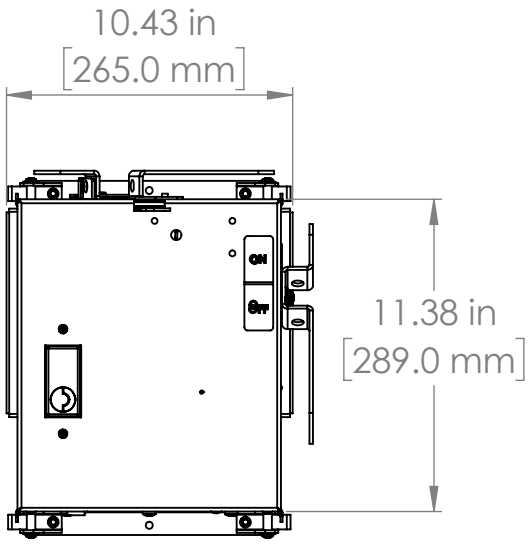

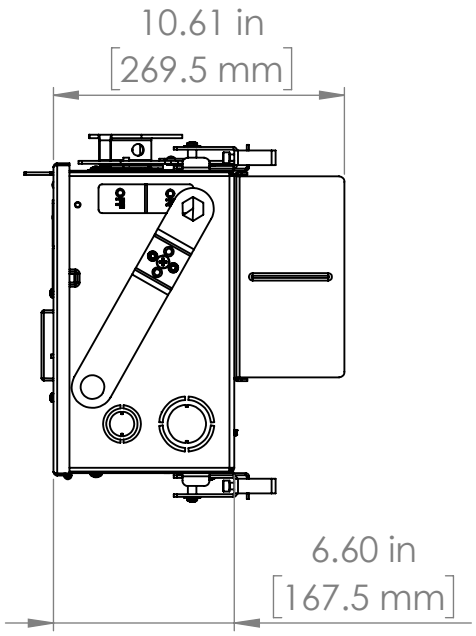

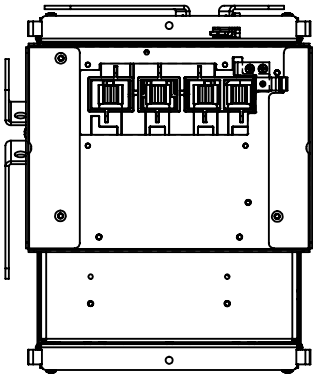

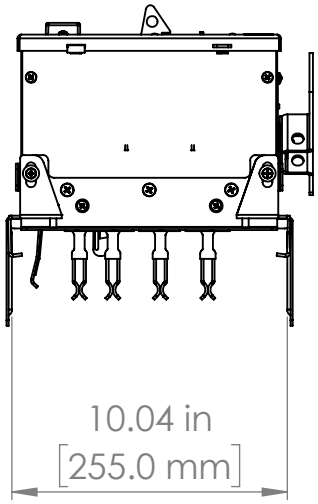

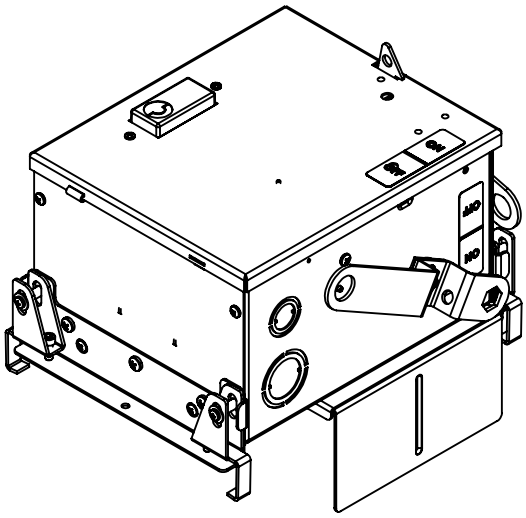

* NOTE: BRAH Electric aftermarketdirect,30amp, 240volt, 3 phase, 3 wire, fusible style bus plug, type BUV / UV, suitable for use with OEM ITE/ siemens XL-U series Industrial Busway Systems.

THIRD ANGLE PROJECTION

PROPRIETARY AND CONFIDENTIAL

THE INFORMATION CONTAINED IN THIS DRAWING IS THE SOLE PROPERTY OF BRAH ELECTRIC. ANY REPRODUCTION IN PART OR AS A WHOLE WITHOUT THE WRITTEN PERMISSION OF BRAH ELECTRIC IS PROHIBITED.

UNLESS OTHERWISE NOTED

ALL DIMENSIONS ARE IN INCHES METRIC UNITS ARE DISPLAYED BENEATH IN [MM.]

MATERIAL

FINISH N/A

DO NOT SCALE DRAWING

FUSIBLE BUS BLUGS

SIZE	DWG. NO.	REV.
A	BUV3203GNW	A
SCALE:1:10	WEIGHT:	SHEET 1 OF 1