CONTACT US
855.355.2724
E-Mail: sales@brahelectric.com
www.brahelectric.com

Product Data Sheet

BUS PLUGS

PART NO. BES3210GW

UL CERTIFIED
SAFETY US
E503970

PART NUMBER – BES3210GW

BRAH Electric aftermarket 100 amp, 240 volt, 3 phase, 4 wire, with ground, fusible style bus plug, includes weather stripping for drip protection, type BES / BOS, UL Listed assembly, complete with UL Recognized internal switch and components, suitable for use with OEM Bulldog / ITE / Siemens BD Series industrial busway systems, accepts Class R, H and K fuse types, direct substitute, fit and function for ITE OEM type BOS Bus Plugs

PRODUCT SPECIFICATIONS

Manufacturer	BRAH Electric
Sub-Category	Fusible
Type	BEL, SL
Wire	3
Voltage	240V
Amperage	100A
Suitable Fuse	H, K, R
A/C Rating	200 kA@240V
Phase	3

Warranty: All Products sold by BRAH Electric are guaranteed to be free of defect for a period of two years, under the condition that the product has been installed and operated properly. All items proven defective within the one year period will be replaced by BRAH Electric. In the event that we cannot provide a direct replacement, your monies will be refunded in full. We are not responsible for any consequential losses or damages outside of the defective product as well as any replacements or repairs performed by another party without our written authorization from BRAH Electric.

REVISIONS				
ZONE	REV.	DESCRIPTION	DATE	APPROVED

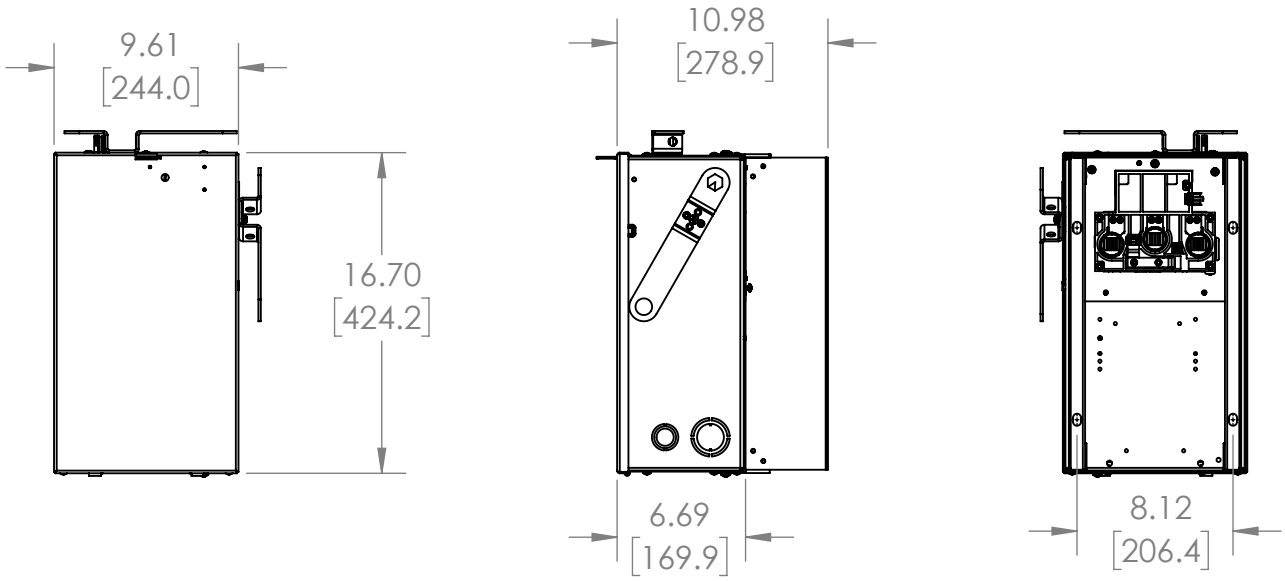

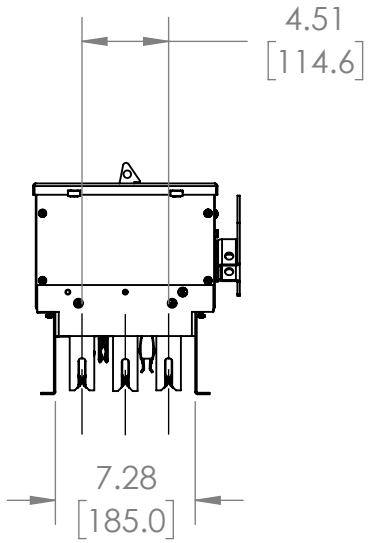

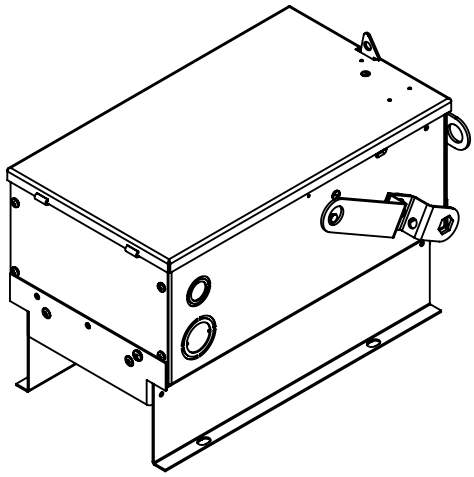

CERTIFIED
SAFETY US
E503970

WWW.BRAHELECTRIC.COM , 855-355-2724

100A amp, 240V volt, 3 phase, 3 wire fusible style bus plug type BES / BOS, UL listed assembly, complete with UL recognized internal switch and components.

THIRD ANGLE PROJECTION

UNLESS OTHERWISE NOTED

ALL DIMENSIONS ARE IN INCHES
METRIC UNITS ARE DISPLAYED BENEATH IN [MM.]

GENERAL TOLERANCE
ASME Y14.5M-1994

PROPRIETARY AND CONFIDENTIAL
THE INFORMATION CONTAINED IN THIS DRAWING IS THE SOLE PROPERTY OF BRAH ELECTRIC. ANY REPRODUCTION IN PART OR AS A WHOLE WITHOUT THE WRITTEN PERMISSION OF BRAH ELECTRIC IS PROHIBITED.

DO NOT SCALE DRAWING

MATERIAL

FINISH

DRAWN
MHENRY

DATE
4/15/2024

BRAH Electric Mfg.

FUSIBLE BUS PLUGS

SIZE	DWG. NO.	REV.
A	BES3210GW	A
SCALE:1:10	WEIGHT: 3.2 LBS	SHEET 1 OF 1