CONTACT US
855.355.2724
E-Mail: sales@brahelectric.com
www.brahelectric.com

Product Data Sheet

BUS PLUGS

PART NO. BEL3210W

CERTIFIED
SAFETY US
E503970

PART NUMBER – BEL3210W

BRAH Electric aftermarket SL323RI, 100 amp, 240 volt, 3 phase, 3 wire, fusible style bus plug, includes weather stripping for drip protection, type BEL / SL, UL Listed assembly, complete with UL Recognized internal switch and components, suitable for use with OEM General Electric / ABB Spectra Low-Amp Series industrial busway systems, accepts Class H, R and J fuse types, direct substitute, fit and function for GE OEM SL323RI, SL323RJI

PRODUCT SPECIFICATIONS

Manufacturer	BRAH Electric
Sub-Category	Fusible
Type	SL, BEL
Wire	3
Voltage	240V
Amperage	100A
Suitable Fuse	H, J, R
A/C Rating	200 kA@240V
Phase	3

Warranty: All Products sold by BRAH Electric are guaranteed to be free of defect for a period of two years, under the condition that the product has been installed and operated properly. All items proven defective within the one year period will be replaced by BRAH Electric. In the event that we cannot provide a direct replacement, your monies will be refunded in full. We are not responsible for any consequential losses or damages outside of the defective product as well as any replacements or repairs performed by another party without our written authorization from BRAH Electric.

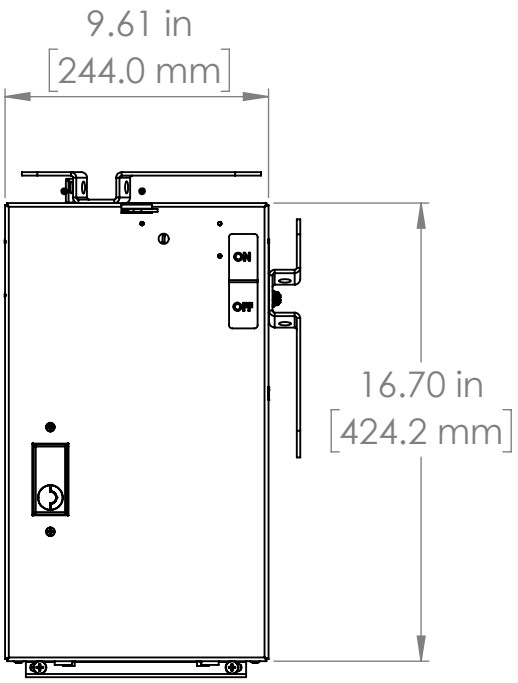

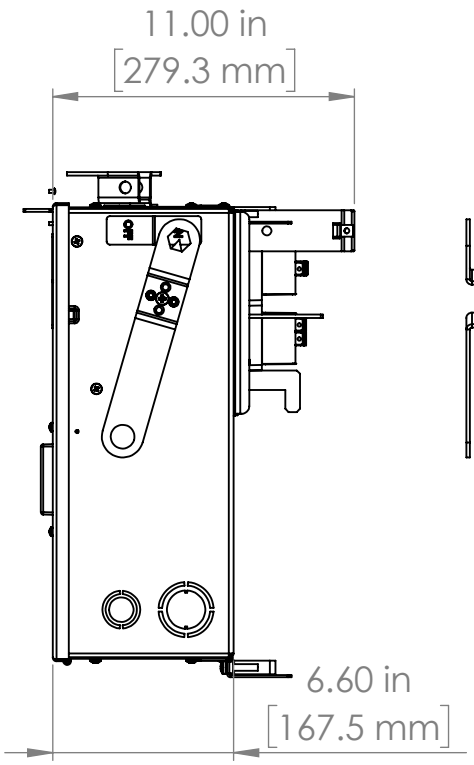

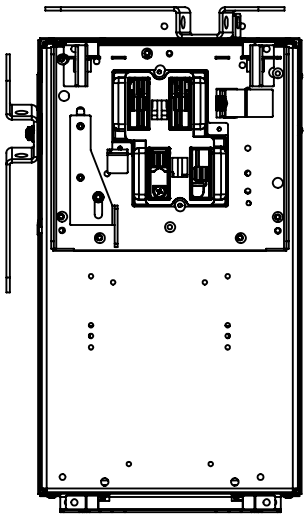

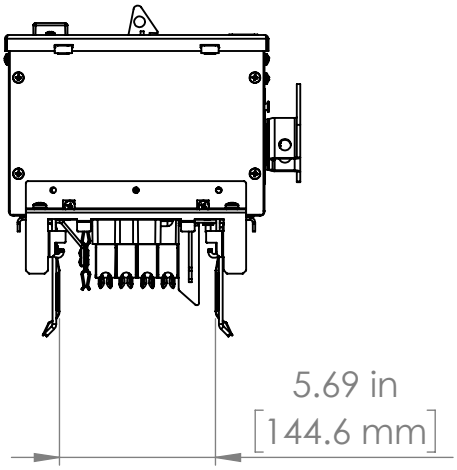

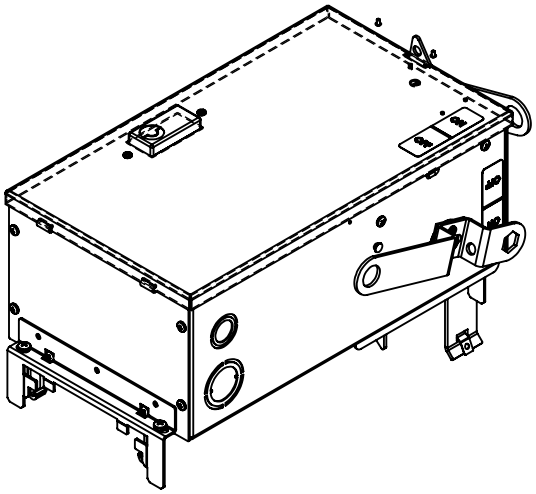

UL CERTIFIED
SAFETY US
E503970

* NOTE: BRAH Electric aftermarket direct SL323RI, 100amp, 240volt, 3 phase, 3 wire, fusible style bus plug, type BEL / SL, UL Listed assembly,complete with UL Recognized internal switch and components.

THIRD ANGLE PROJECTION

PROPRIETARY AND CONFIDENTIAL

THE INFORMATION CONTAINED IN THIS DRAWING IS THE SOLE PROPERTY OF BRAH ELECTRIC. ANY REPRODUCTION IN PART OR AS A WHOLE WITHOUT THE WRITTEN PERMISSION OF BRAH ELECTRIC IS PROHIBITED.

UNLESS OTHERWISE NOTED

ALL DIMENSIONS ARE IN INCHES METRIC UNITS ARE DISPLAYED BENEATH IN [MM.]

MATERIAL

FINISH N/A

DO NOT SCALE DRAWING

BRAH Electric

FUSIBLE BUS BLUGS

SIZE	DWG. NO.	REV.
A	BEL3210W	A

SCALE:1:10 WEIGHT: SHEET 1 OF 1