CONTACT US
855.355.2724
E-Mail: sales@brahelectric.com
www.brahelectric.com

Product Data Sheet

BUS PLUGS

PART NO. BVB3210

PART NUMBER – BVB3210

BRAH Electric aftermarket direct replacement SLVB3230, 100A, 240V, 3 phase, 3 wire, fusible style bus plug, compatible with types SLVB, SLVBH, SLID, SXID, BVB. Suitable for use with OEM Siemens Sentron Series industrial busway systems. Accepts Class H, R and J fuse types. Direct substitute, fit and function, for Siemens SLVB3230, SLVBH3230, SLID3230, SXID3230.

PRODUCT SPECIFICATIONS

Manufacturer	BRAH Electric
Sub-Category	Fusible
Family	Sentron Series
Type	SLVB, SLVBH, SLID, SXID, BVB
Phase	3
Wire	3
Voltage	240
Amperage	100
Suitable Fuse	H, J, R
A/C Rating	200 kA@240V
Ground	NO
Weatherproof	NO

Warranty: All Products sold by BRAH Electric are guaranteed to be free of defect for a period of two years, under the condition that the product has been installed and operated properly. All items proven defective within the one year period will be replaced by BRAH Electric. In the event that we cannot provide a direct replacement, your monies will be refunded in full. We are not responsible for any consequential losses or damages outside of the defective product as well as any replacements or repairs performed by another party without our written authorization from BRAH Electric.

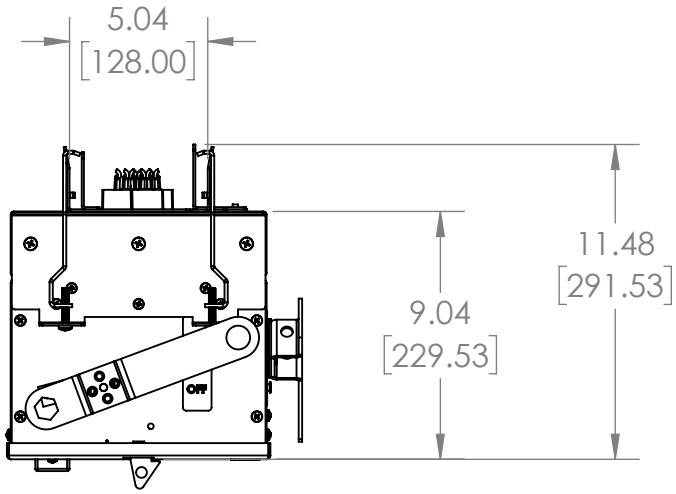

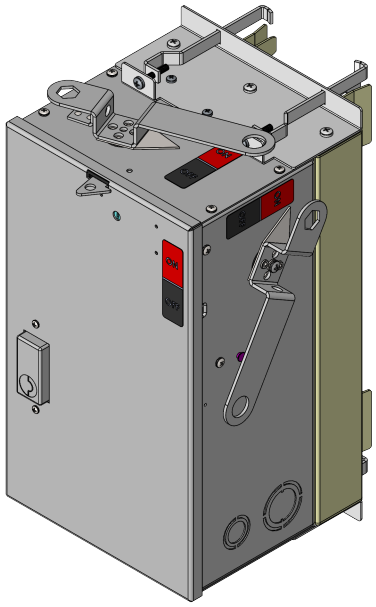

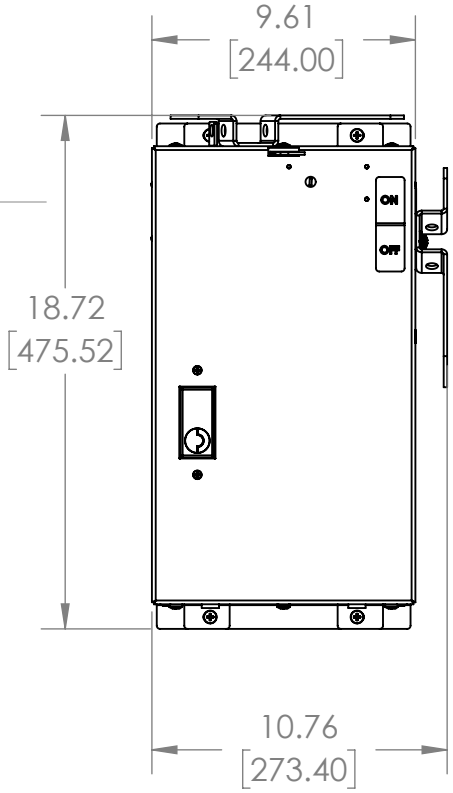

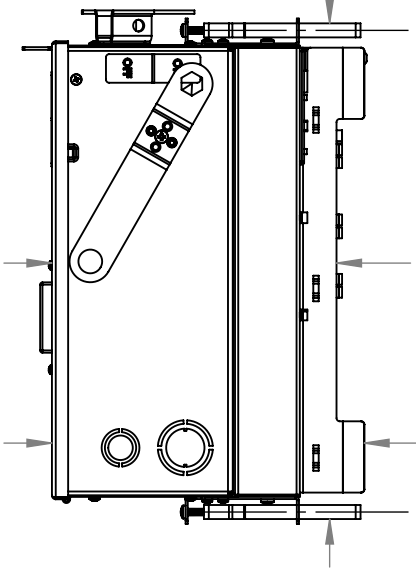

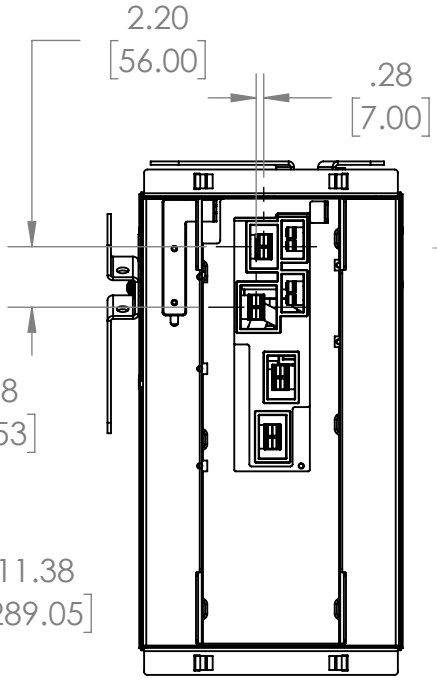

WWW.BRAHELECTRIC.COM , 855-355-2724

BRAH Electric aftermarket direct replacement for SLVB3230, SLVBH3230, SLID3230, SXID3230. 100A, 240V, 3 phase, 3, wire, fusible style bus plug, type SLVB, SLVBH, SLID, SXID, BVB.

THIRD ANGLE PROJECTION

TOLERANCES

ANGULAR MACH ± .5°

LINEAR

X:	± .02	[.5]
X.X:	± .01	[.25]
X.XX:	± .005	[.13]

UNLESS OTHERWISE NOTED

ALL DIMENSIONS ARE IN INCHES METRIC UNITS ARE DISPLAYED BENEATH IN [MM.]

GENERAL TOLERANCE
ASME Y14.5M-1994

PROPRIETARY AND CONFIDENTIAL

THE INFORMATION CONTAINED IN THIS DRAWING IS THE SOLE PROPERTY OF BRAH ELECTRIC. ANY REPRODUCTION IN PART OR AS A WHOLE WITHOUT THE WRITTEN PERMISSION OF BRAH ELECTRIC IS PROHIBITED.

DO NOT SCALE DRAWING

MATERIAL: N/A

FINISH: N/A

DRAWN BY: MHENRY

DATE: 3/27/2025

BRAH Electric Mfg.

Fusible Bus Plug

SIZE	DWG. NO.	REV.
A	BVB3210	A

SCALE:1:7

SHEET 1 OF 1