# SG-40 and SG-50 Air and Hydraulic Driven Assemblies

## Description:

The **SG-40** and **SG-50 Belt Driven Assembly** was designed as a powered rotary waterblast tool for use in fast rotation applications such as surface cleaning, scarification and coating removal. The assembly consists of an SG swivel driven by a belt connected to either an air motor (SG-40) or a hydraulic motor (SG-50). The belt reduction is 2:1, producing maximum head rotation speeds of between 750 and 1000 rpm. The motor may be throttled to reduce the rotation speed. The assembly is rated up to 15,000 psi or 22,000 psi depending on the swivel and head type; the maximum flow rate is 50 gpm. Various head types may be used, from one piece bar type heads to multiple bent arms on a manifold. The swivel shaft has a straight thread called "K", which uses an O-Ring (FS 021-K) to seal to the head. For further information on the SG swivel, refer to the SG-CCN Swivel insert sheet.

## Operation:

The assembly must be firmly mounted to support the jet reaction force, which could be several hundred pounds of thrust. Rotate the head by hand to make certain it clears the surface being cleaned as well as any shields or guards. Connect the air line or hydraulic lines to the motor so that the rotation direction will tighten the swivel shaft into the head. The air motor used in the SG-40 requires an air supply of 25 to 40 cfm at 80 psi; the air motor needs to be provided with lubrication, and an air dryer is recommended. The hydraulic motor used in the SG-50 requires between 3 and 4.5 gpm at a maximum continuous pressure of 1500 psi; do not exceed this pressure. When using the hydraulic version, we recommend using a valve that prevents sudden stops of the motor, such as a cushion valve.

It is okay to spin the unit for short periods without water, but if the time period will be longer than 15 seconds, there should be at least low pressure water supplied to the swivel to prevent excessive heat buildup. Always flush the high pressure water hose before connecting to swivel inlet to avoid plugging nozzles. Once at operating pressure and desired rotation speed, the unit should not severely vibrate or shake. (If arms of different lengths are used, there will be a small amount of vibration.)

## Maintenance:

Grease the swivel after every 100 hours of use; when the amount of leak from the swivel seal does not allow maintaining operating pressure, replace the high pressure seals; refer to the SG-CCN Swivel insert sheet. Maintain sufficient lubrication for the air motor drive; if the unit will be stored for more than a few days without use, squirt some air tool oil into the air motor inlet and operate briefly to distribute the oil in the motor. If the unit vibrates and wear or cracking is occuring on the aluminum flange that retains the swivel, check nozzles for plugging or wear, which creates unbalanced jet thrust and vibration. The most common failures of the belt are stripping of teeth and breaking of the belt; both are frequently caused by abrupt stopping of the rotation, particularly with the hydraulic drive. There is a rubber seal to keep material out of the aluminum housing; it should be replaced if worn and is allowing material into the box.

**CORROSIVE ENVIRONMENT NOTE:** The SG-40/50 assembly is not watertight. After using the assembly in corrosive environments, it is recommended to take the housings apart and clean all exposed parts. Check for any damaged, corroded or worn components and replace as necessary. Allow the unit to dry completely prior to re-assembly.

**MOUNTING BOLT PATTERN**

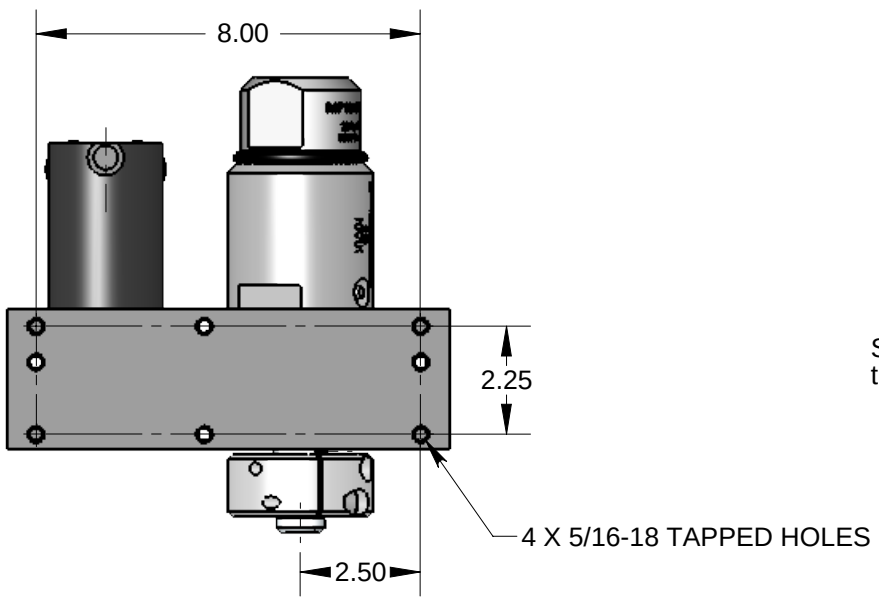


**DIRECTION OF ROTATION**

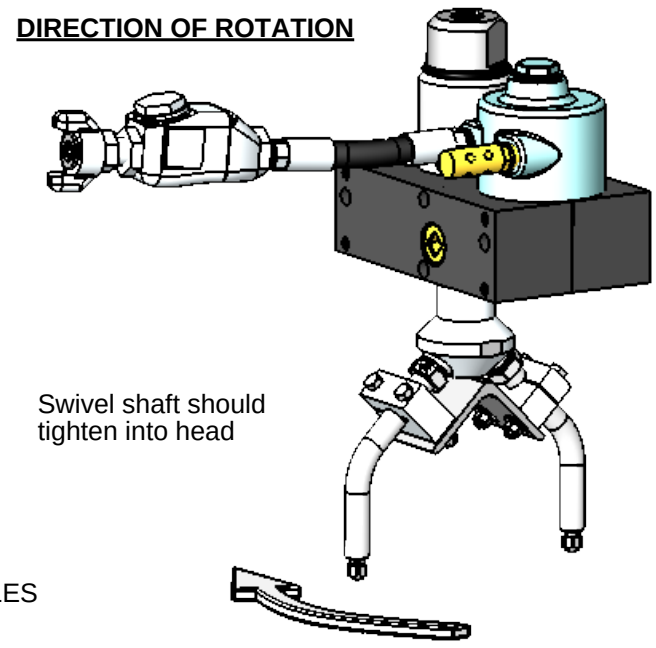


### DRIVE BELT REPLACEMENT

1. Remove four thru-bolts in aluminum housing.

2. Separate halves of aluminum housing; remove swivel and motor. Inspect sprockets for foreign material buildup; inspect shaft seal for wear and replace if worn or damaged.

3. Place new belt on swivel sprocket and motor sprocket and place motor and swivel into half of aluminum housing. If sprockets were moved or replaced, check that the sprockets align with each other.

4. Replace other half of aluminum housing, keeping motor and swivel properly seated in the housing. Check belt tension thru the view port opening; rotate the eccentric bushing on the motor to adjust belt tension. When the thru-bolts are tightened, the belt will be tighter than it is now.

5. Tighten thru-bolts to hold the cover halves together; check belt tension through the view port to be sure it is not too tight; belt should deflect about 1/8 inch with 5 to 10 pounds of push with fingertip.

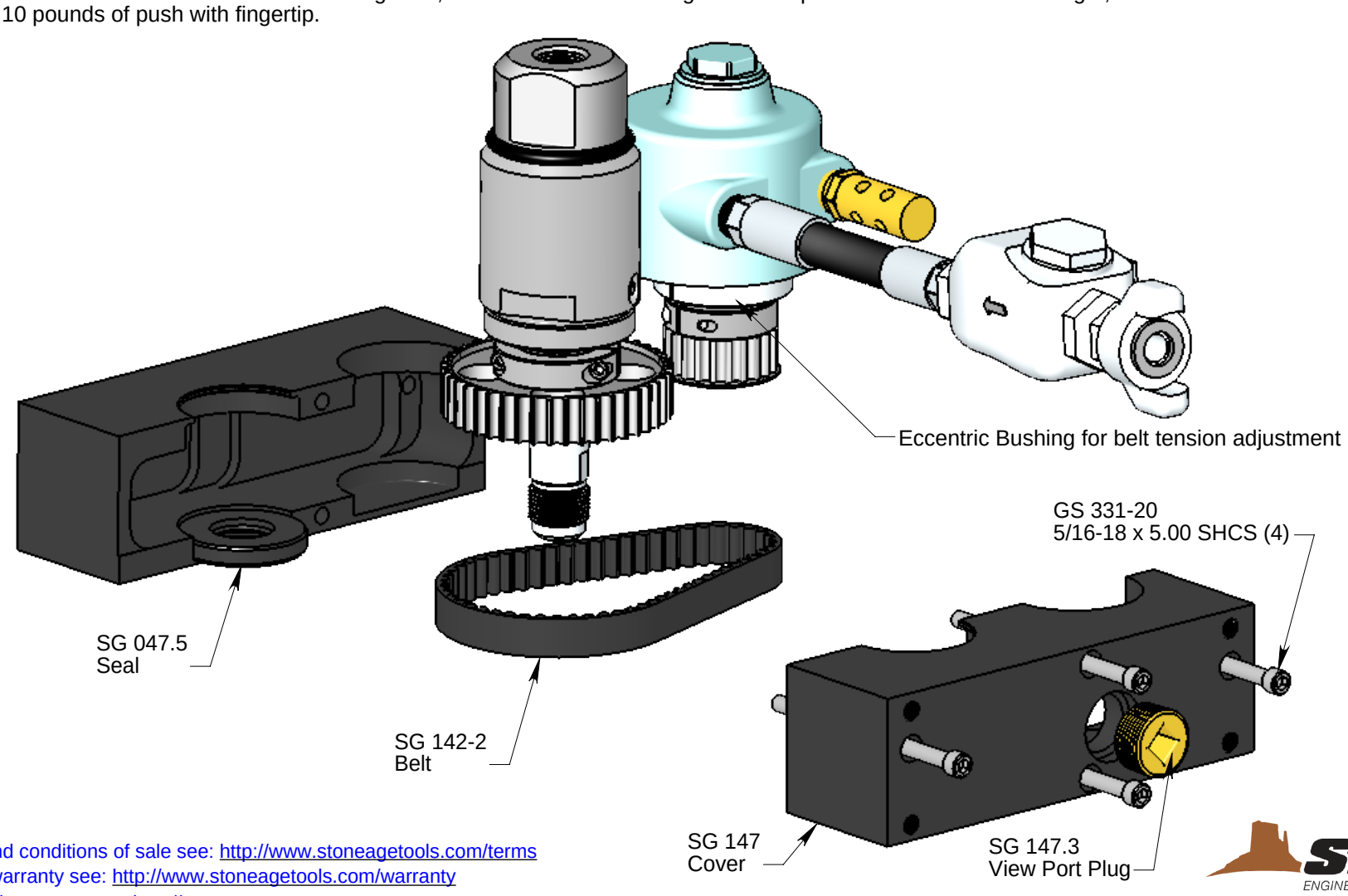


For terms and conditions of sale see: http://www.stoneagetools.com/terms
For limited warranty see: http://www.stoneagetools.com/warranty
For applicable patents see: http://www.sapatents.com

# SG-40 and SG-50 Air and Hydraulic Driven Assemblies

## SG-40 Air Powered Assembly

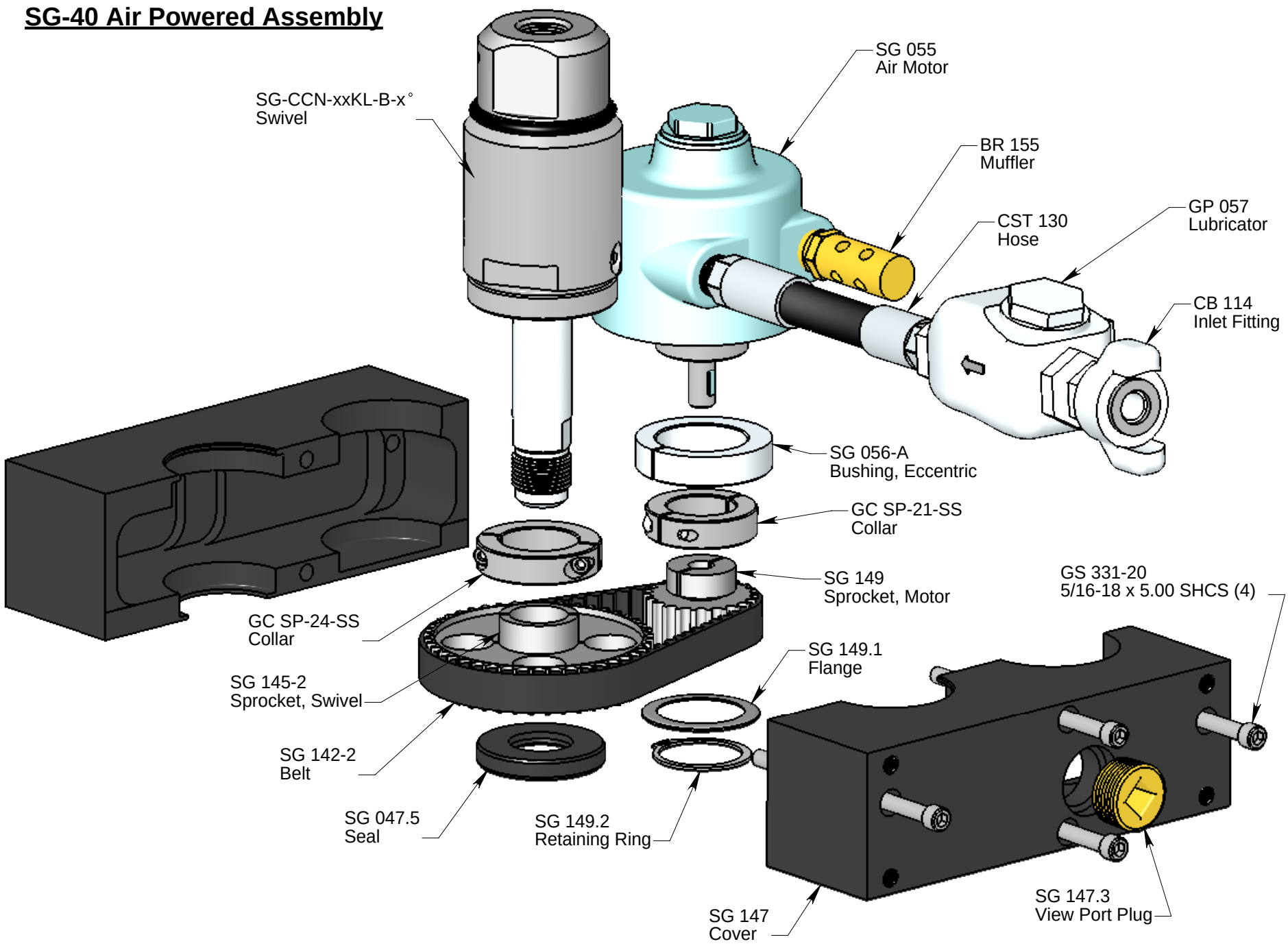


## SG-50 Hydraulic Powered Assembly

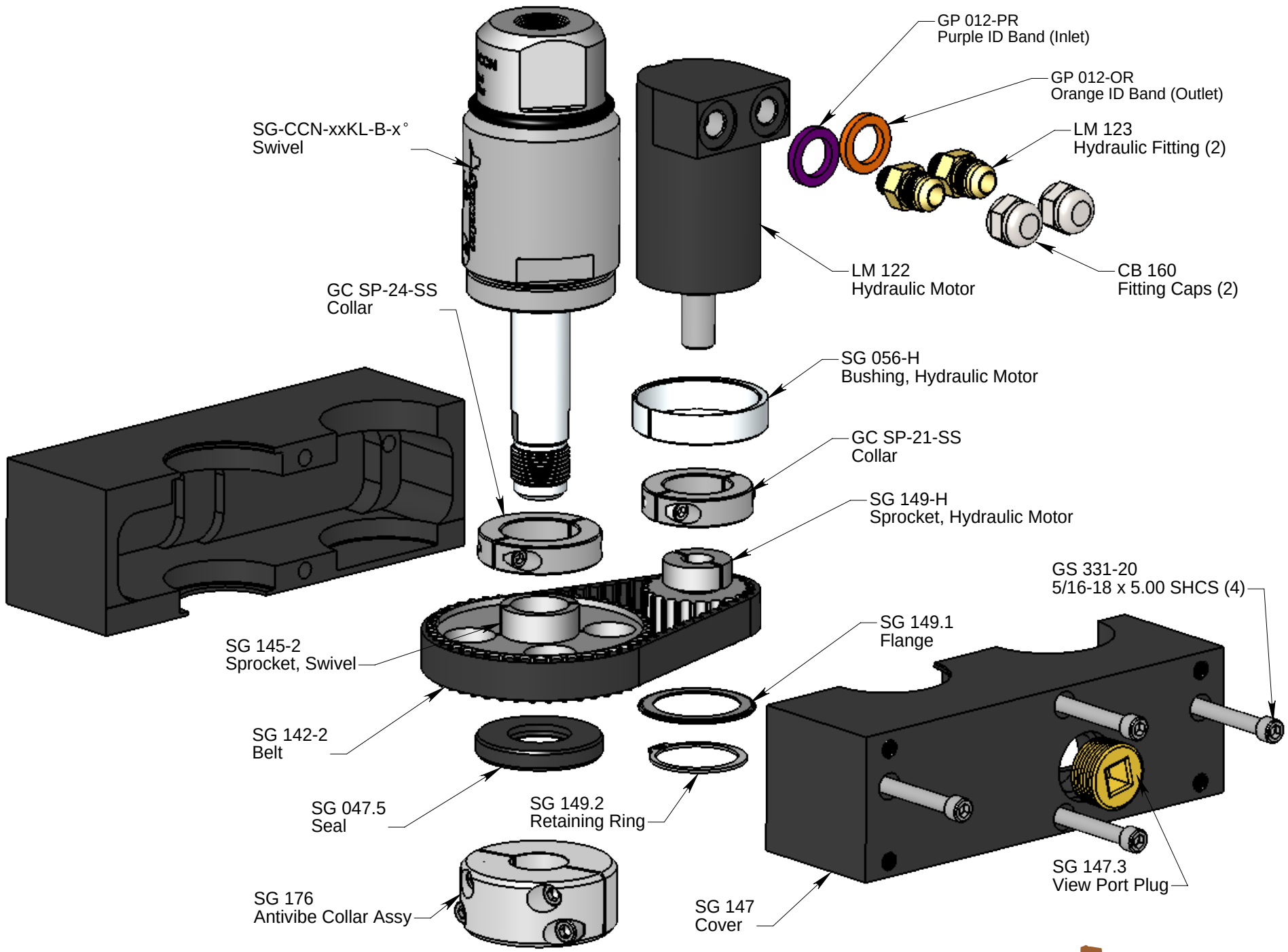


STONEAGE
ENGINEERING THE POWER OF WATER

PL 516 É 05/03/2017 StoneAgeÈ, All Rights Reserved