SH Swivel (SH-P8P8)

Description:

The **SH** swivel was designed to be a versatile, compact union for use in conveying high pressure fluid from a stationary line to a rotating or twisting assembly. Typically this swivel is used as a swiveling connection between the high pressure hose and a shotgun; it is also used on hose reel devices. Due to it's unique seal design, the torque necessary to turn the swivel is relatively small, even at high pressures. At 10,000 psi only 8 in-lb is required to rotate the shaft.

The SH-P8P8 swivel has a 1/2 NPT female port, and a 1/2 NPT male shaft. A 90Áinlet nut is available. The maximum pressure rating is 15,000 psi, and the maximum flow rating is 50 gpm.

The SH-MP12G14 has a 3/4 medium pressure inlet and a 7/8"-14 shaft thread with an O-ring face seal; this model is rated to 22,000 psi.

Operation:

If the swivel is used on a dump style shotgun, it needs to be installed with the hose connected to the inlet nut and the shaft connected to the shotgun. This prevents the high pressure seal from getting washed out of the swivel when the gun is dumped. In other applications where there is not a dump outlet downstream of the swivel, the flow direction through the swivel does not matter.

The high pressure seal may leak at low pressures; as the pressure is increased the seal will pop shut. If a low flow pump is being used and the pump cannot get up to operating pressure because of the initial seal leak, a low flow seal combination is available that uses a spring to keep the seal closed at all times. See below.

Troubleshooting:

Swivel will not rotate: Bearings need to be replaced. They are sealed and greased bearings, but water will eventually overcome the lubrication.
Seal Leak: The seal may leak initially up to several thousand psi, but should pop closed as pressure is increased. If operating pressure is reached and the seal is leaking continuously, the high pressure seal may need to be replaced. Refer to the maintenance below. Inspect the face of the inlet nut for pitting or grooves from erosion; if present, the swivel will leak until the inlet nut is refaced or replaced.
Seals wear out quickly: The tool must be disassembled and inspected. The carbide seat should be checked for being installed in the right direction, and it should not have any chips or erosion marks on it. The bore of the shaft where the high pressure seal is located should be checked for grooving. If it is worn larger than .508", the shaft will need to be replaced. If the seal is being washed out when used on a shotgun inlet, make sure the swivel is installed with the hose connected to the swivel inlet nut and the swivel shaft connected to the gun inlet.

Maintenance:

***Blow out all water with compressed air before storing tool!**

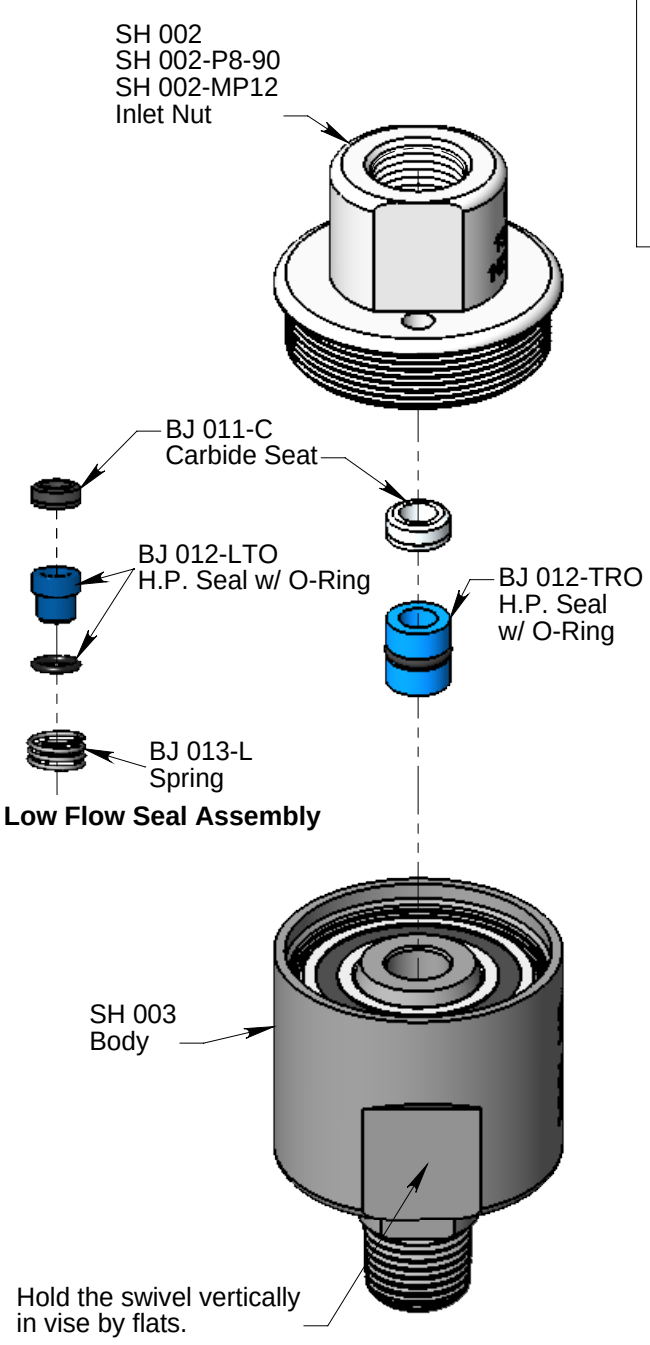

Low Flow Seal Assembly

Detailed Drawing:

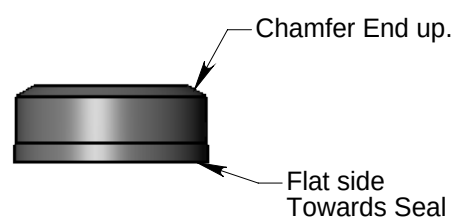

A single high pressure seal is used to provide near leak free operation. It is long lived, but is considered a wearable item. The seal can be replaced easily and inexpensively.

To replace the seal:

1) Hold the swivel vertically in vise by flats.

2) Remove the inlet nut (002)

3) Lift out the Carbide Seat (011-C) and High Pressure Seal (012-TRO).

4) Check seat O.D.. Replace if edges are chipped. Inspect face of Inlet Nut for erosion or dents. Face or replace if damaged.

5) Compare used seal with new one. Replace if 50% consumed or damaged

6) Check shaft bore I.D. Replace if larger than .508". Inspect the face of the inlet nut for pitting or erosion; it should be faced or replaced if damaged.

7) Slide the seal (with O-Ring) and seat back into the bore. Note the orientation of the seat: the large flat side goes against the blue seal. The chamfered end goes toward the inlet nut.

Assembly/Disassembly:

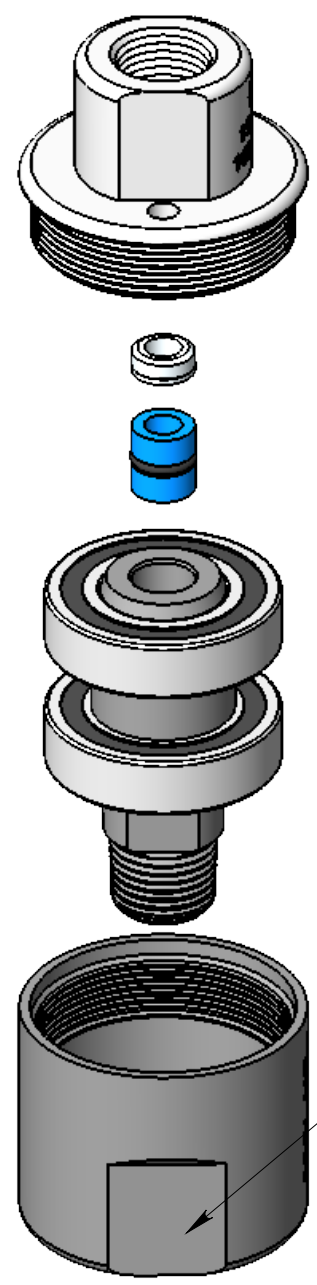

1) Inlet nut is threaded into the body. Make sure anti-sieze is applied to threads. If bearing is stuck in inlet nut, use a punch thru the weep holes to push it out.

2) Remove/install carbide seat and high pressure seal.

NOTE: When installing, don't press the H.P. Seal and Carbide Seat all the way in/down. Allow the Inlet nut to push them down while being threaded on.

3) Remove/install shaft with bearings into body. Bearings are pressed onto the shaft.

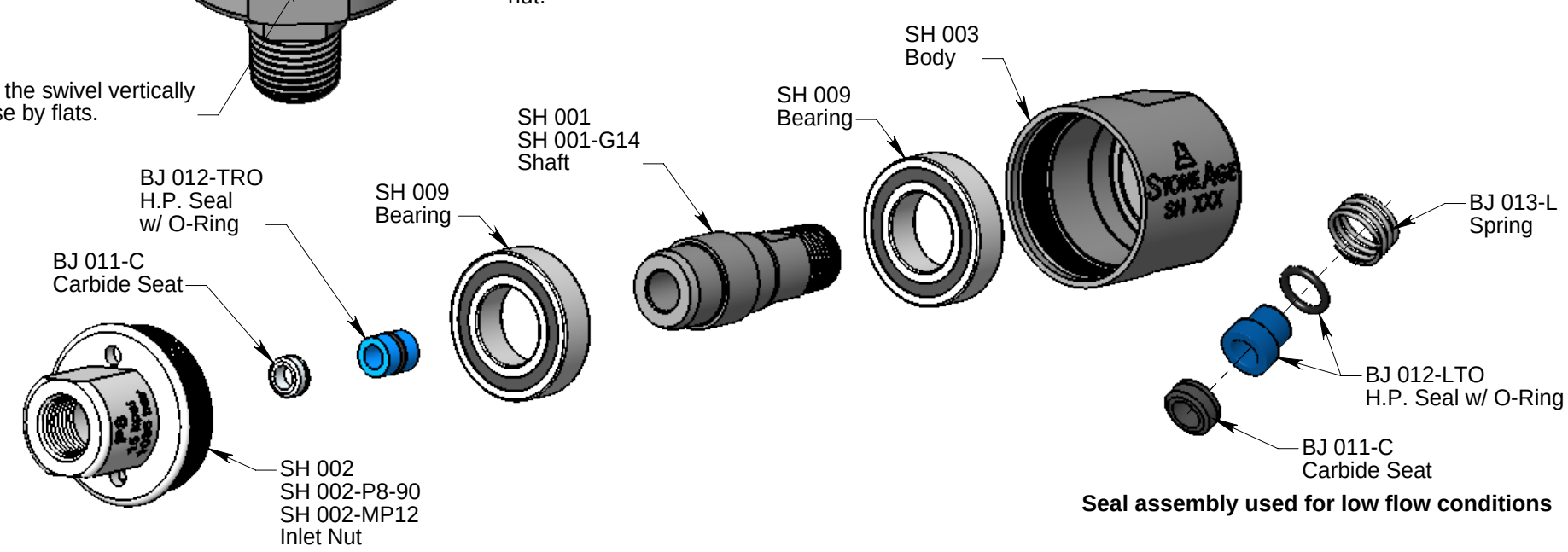

Seal assembly used for low flow conditions

For terms and conditions of sale see: http://www.stoneagetools.com/terms
For limited warranty see: http://www.stoneagetools.com/warranty
For applicable patents see: http://www.sapatents.com

PL 521 É 05/03/2017 StoneAge®, All Rights Reserved