TENSIO_0526

Studio AMARE
design by Bertille Achard de la Vente

CHARACTERISTICS	PRODUCT	/	TENSIO_0526
	MATERIAL STRUCTURE	/	BLACK MARQUINA MARBLE
DIMENSIONS	WIDTH	/	62 cm
	DEPTH	/	35 cm
	HEIGHT	/	90 cm



FRONT VIEW

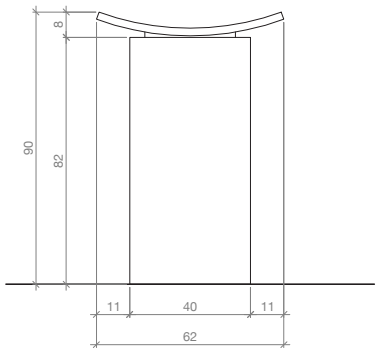

SIDE VIEW

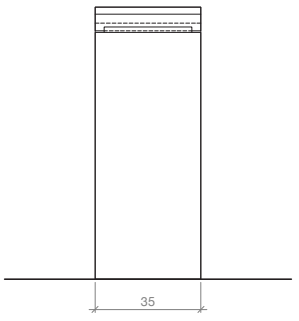

TOP VIEW

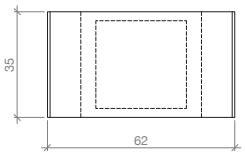

ISOMETRIC VIEW

