Aspen Lever Dormakaba Kit

Solid brass lever handle featuring a subtle stepped edge and flat face. Designed for use with compatible Dormakaba MS2600 and MS2900 Series mortice lock kits, offering a refined and coordinated architectural hardware solution.

Please note: Dormakaba lock body and associated kit components are sold separately.



LEVER KITS	ASDPL.ENTR

FINISHES	Brushed Satin Brass (BSB)	Dull Brushed Nickel (DBR)	Matt Black (MBL)	Bronze (BNZ)
	Dark Brushed Brass (DBB)			

Lever Set

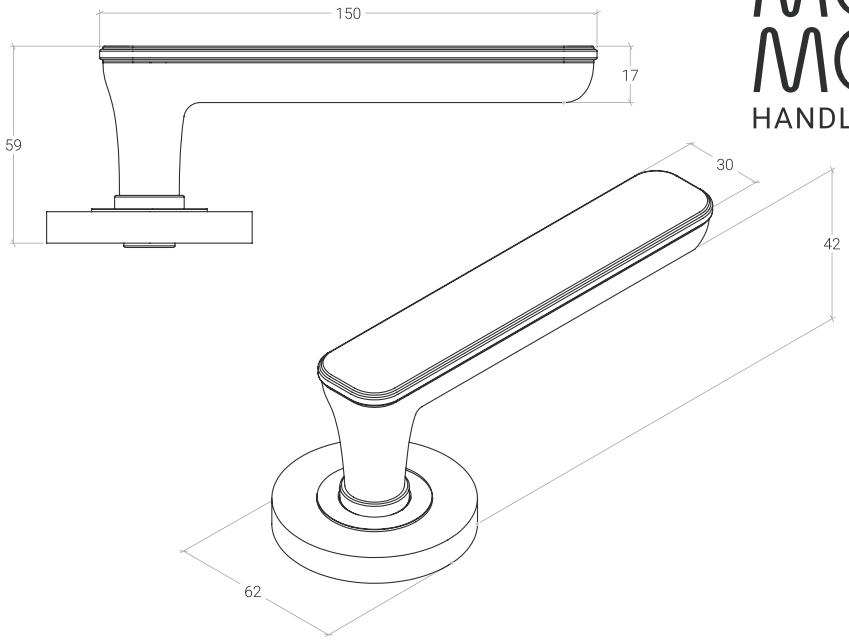

Oval escutcheon set

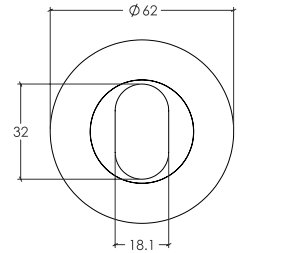

Striker Plate

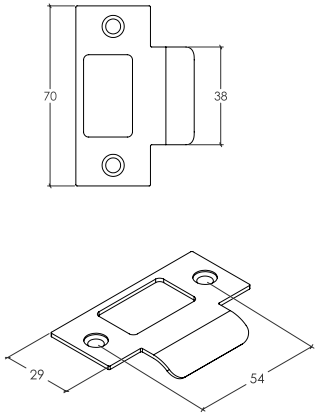

Forend Plate

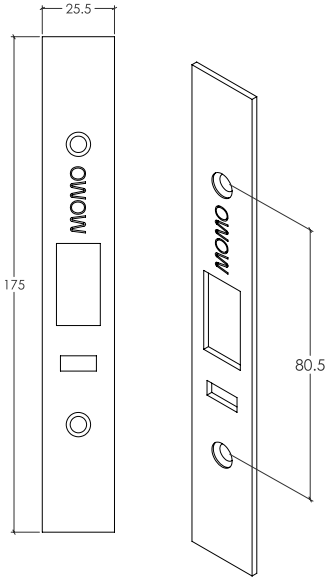

The Aspen Dormakaba Kit Includes

- 1 × Momo Aspen Lever Handle Set
- 1 × Momo Handles Oval Cylinder Escutcheon Set
- 1 × Momo Handles Dormakaba MS2600 and MS2900 Series Lock Forend and Striker Kit