AUTHENTIC SnowEx PARTS & ACCESSORIES

LT Light Truck Snowplow

Full parts list (Lit. No. 94117 and 52525) available at *www.snowexproducts.com.*

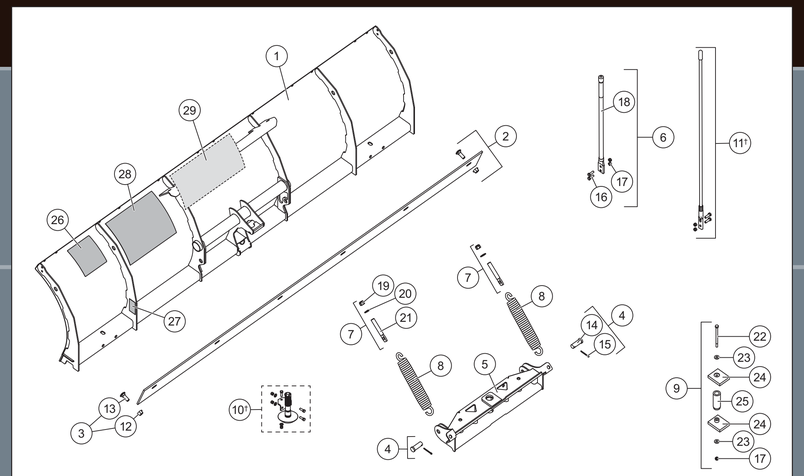

77700/77705 BLADE COMPONENTS

Item	Part	Description	Item	Part	Description
1	84554	6800LT Blade w/Labels	7	84702	Eyebolt Kit
	84556	7200LT Blade w/Labels	8	B61167	Trip Spring
2	B61458	1/4 Steel Cutting Edge Kit – 6800LT	9	84629	Center Pivot Bolt Kit
	B61531	1/4 Steel Cutting Edge Kit – 7200LT	10†	84506-1	Shoe Assembly Kit
3	B61255	Cutting Edge Bolt Bag	11†	84477	36" Poly Blade Guide Kit
4	84631	3/4 x 2 Clevis Pin Kit w/Cotter	ns	84640	Blade Label Kit
5	84573	Quadrant LT	ns	84524†	Rubber Deflector Kit
6	84525	24" Blade Guide Kit			
Item 2		**B61458/B61531 1/4 Steel Cutting Edge Kit**			
		1/4 Steel Cutting Edge	3	B61255	Cutting Edge Bolt Bag
Item 3		**B61255 Cutting Edge Bolt Bag**			
12		1/2-13 Hex Locknut GB	13		1/2-13 x 3-1/4 Carriage Bolt G8
Item 4		**84631 3/4 x 2 Clevis Pin Kit w/Cotter**			
14		3/4 x 2 Clevis Pin	15		5/32 x 1-1/2 Cotter Pin
Item 6		**84525 24" Blade Guide Kit**			
16		5/16-18 x 1 Hex Cap Screw G5	18		24" Poly Blade Guide w/Label
17		5/16-18 Hex Locknut GB			
Item 7		**84702 Eyebolt Kit**			
19		5/8-11 Hex Locknut GB	21		5/8-11 x 4 Eyebolt
20		5/8 Hardened Flat Washer			
Item 9		**84629 Center Pivot Bolt Kit**			
17		5/16-18 Hex Locknut GB	24	27615	Bumper
22		5/16-18 x 5 Hex Cap Screw G5	25		Pivot Tube
23		5/16 Flat Washer Type A			
		84640 Blade Label Kit			
26	59900	Label – Warning/Caution, Snowplows	28	52204	Label – Attach/Detach, Automatixx®
27	29256	Label – Warning, Foot Crush	29	77701	Label – Logo, LT Blade Center

ns = not shown † = Accessory Only G = Grade

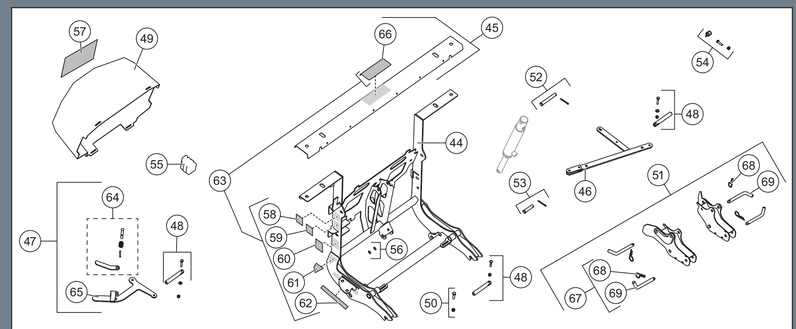

HEADGEAR COMPONENTS

Item	Part	Description	Item	Part	Description
44	84617	Headgear (incl. item 56)	54	84778	Clamp Loop Kit
45	84619	Light Bar Channel	55	61246	Cable Boot
46	84597	Link Arm	56	84616	Grease Zerk (pkg of 3)
47	84594	Attach Handle Kit	57	43859	Label – Hydraulic Information, Straight Blades
48	84602	Hitch Pin Kit	58	52206	Label – Power Switch, Automatixx
49	84648	Hydraulic Cover (incl. item 57)	59	52207	Label – Operation Switch, Automatixx
50	84635	Link Arm/Attach Handle Fastener Kit	60	69689	Label – Logo, SECURITY GUARD™
51	84839	Receiver Kit	61	77717	Label – Logo, Automatixx, Upper
52	85199	Lift Ram Base Pin Kit	62	77718	Label – Logo, Automatixx, Lower
53	84627	Lift Ram Rod Pin Kit	63	84646	Headgear Label Kit
Item 47		**84594 Attach Handle Kit**			
64	84596	Attach Handle Release Cam Kit	65	84004	Handle
Item 63		**84646 Headgear Label Kit**			
58	52206	Label – Power Switch, Automatixx	61	77717	Label – Logo, Automatixx, Upper
59	52207	Label – Operation Switch, Automatixx	62	77718	Label – Logo, Automatixx, Lower
60	69689	Label – Logo, SECURITY GUARD	66	84553	Label – Logo, SnowEx® Light Bar, Center
Item 67		**84610 Receiver Pin Kit**			
68		Hairpin Cotter	69		1/2 x 4 Hitch Pin

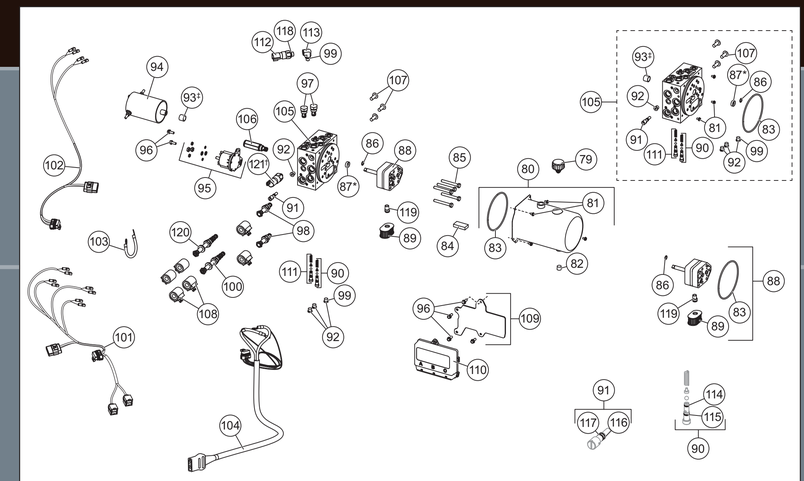

52650 HYDRAULIC UNIT

Item	Part	Description	Item	Part	Description
79	48278	Breather	100	52285	Valve, 4-Way, 3-Position Closed Center
80	52289	Reservoir Kit	101	70448	Plow Control Harness, 4-Coil
81	66607	#10-24 x 5/16 Machine Screw	102	52077	Plow Control Harness, 2-Coil
82	92079	Plug, Square 3/8 NPTF	103	29071	Vehicle Battery Cable 8"
83	66519	O-Ring 2-250	104	52291	Snowplow Battery Cable
84	73897	Magnet	105	52257	Manifold Assembly w/o Valves RD/LT
85	90073	5/16-18 x 2-1/4 Hex Cap Screw G5	106	42889	Relief Valve 4000 psi
86	56274	O-Ring -013	107	98043	3/8-16 x 1 Button Cap Screw
87*	66515	Pump Shaft Seal	108	52294	Coil
ns	52252	Seal Repair Tool Kit w/Seal	109	52293-1	Plate, Module
88	52287	Hydraulic Pump Kit	110	52292-1	Module, Plow Control
89	48281	Filter	111	52284	Relief Valve (1 set)
90	52282	Relief Valve (1 set)	112	84838	Pressure Switch
91	48517	Quill	113	52295	Elbow, 90° –4 M ORB/–6 F ORB
92	44344	Plug, Hex Socket –4 M ORB	114	55371	O-Ring -008
93‡	56364	Bearing Sleeve	115	25731	O-Ring -010
ns	52251	Bearing Repair Tool Kit w/Bearing	116	48239	O-Ring -106
94	52299	Motor	117	48240	Back-Up Ring -106
95	52290	Motor Relay Kit, FLEET FLEX System	118	56569	O-Ring -906
96	44355	1/4-20 x 5/8 Hex Washer-Head Thread-Rolling Screw	119	10887	Inlet Fitting
97	84934	Check Valve	120	84937	Valve, 4-Way, 3-Position
98	84936	Valve, 2-Way NC w/Rev Flow	ns		Fuse, 5A Mini Automotive Blade-Style (for items 101 & 102)
99	44343	O-Ring -904	121†	84854	Scrape Maxx™ Kit
		O-Ring Service Kits			
–	52298-2	O-Ring Kit	–	48310	Seal Kit, 2-Way Valves
–	48309	Seal Kit, 3-Way & 4-Way Valves			

M = Male ns = not shown F = Female G = Grade

* Use 52252 tool to install. ‡ Use 52251 tool to install. † Accessory only.

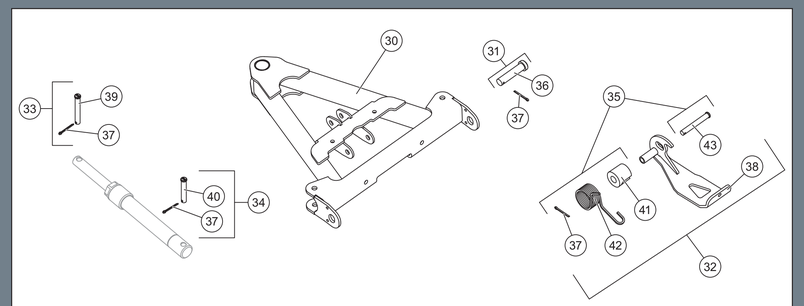

A-FRAME

Item	Part	Description	Item	Part	Description
30	84587	A-Frame	33	83629	1/2 x 3-11/16 Clevis Pin Kit
31	84618	A-Frame Pin Kit	34	85198	1/2 x 2-7/8 Clevis Pin Kit
32	84592	Stand Kit	35	84615	Stand Hardware Kit
Item 31		**84618 A-Frame Pin Kit**			
36		3/4 x 3-1/4 Clevis Pin	37		5/32 x 1-1/2 Cotter Pin
Item 32		**84592 Stand Kit**			
35	84615	Stand Hardware Kit	38		Stand
Item 33		**83629 1/2 x 3-11/16 Clevis Pin Kit**			
37		5/32 x 1-1/2 Cotter Pin	39		1/2 x 3-11/16 Clevis Pin
Item 34		**85198 1/2 x 2-7/8 Clevis Pin Kit**			
37		5/32 x 1-1/2 Cotter Pin	40		1/2 x 2-7/8 Clevis Pin
Item 35		**84615 Stand Hardware Kit**			
37		5/32 x 1-1/2 Cotter Pin	42		Stand Torsion Spring
41		Stand Spring Spacer	43		1/2 x 3-5/8 Clevis Pin

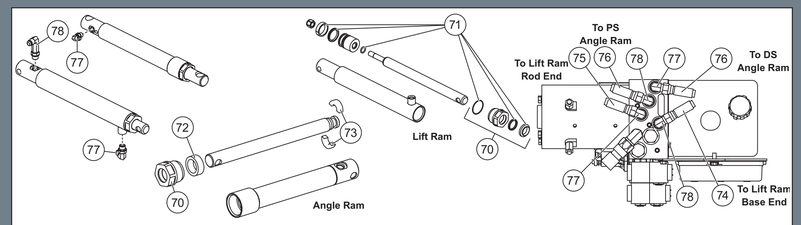

HYDRAULIC COMPONENTS, HOSES & FITTINGS

Item	Part	Description	Item	Part	Description
70	52277	Gland Nut Assembly	75	84453	Hose, 1/4 x 20 w/F JIC Ends
71	52302	Seal Kit 1-1/2 DA Ram	76	52534	Hose, 3/8 x 32 w/F JIC Ends
72	56803	Spacer	77	56615-1	Elbow, 90° –6 M JIC/–6 M ORB
73	52276	1" Split Bearing Kit	78	40572	Elbow, Extra Long 90° –6 M JIC/–6 M ORB
74	84446	Hose, 1/4 x 14 w/F JIC Ends	ns	56823	Hose Wrap

F = Female ns = not shown M = Male

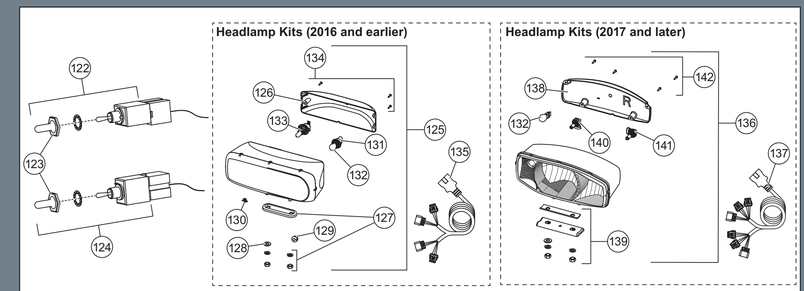

ELECTRICAL COMPONENTS & HEADLAMPS

Item	Part	Description	Item	Part	Description
122	40575	Toggle Switch (MOM-ON, OFF, ON)	135	28213W	Harness Service Kit H13
123	48259	Switch Boot	136	38802	Headlamp Service Kit H9/H11 – PS
124	40576	Toggle Switch (MOM-ON, OFF, MOM-ON)	ns	38801	Headlamp Service Kit H9/H11 – DS
125	28801-1	Headlamp Service Kit H13 – DS	137	38807	Harness Service Kit H9/H11
ns	28802-1	Headlamp Service Kit H13 – PS	138	38803	Rear Cover Kit H9/H11 PS
126	28803-1	Rear Cover Kit (fits 2- or 3-screw)	ns	38812	Rear Cover Kit H9/H11 DS
127	28804	Mounting Hardware Kit	139	38804	Mounting Hardware Kit H9/H11
128	91105	1/2 Flat Washer	140	38811	Headlamp Bulb Service Kit H11
129	66130	Rubber Grommet	141	38809	Headlamp Bulb Service Kit H9
130	56595	Cable Tie Anchor	142	38808	Cover Screws Service Kit H9/H11 (pkg of 4)
131	28805	Park/Turn Socket Service Kit	ns	48325	Plug Cover
132	–	Park/Turn Bulb (trade no. 4157NAK)	ns	72527	Vehicle Battery Cable
133	28806	Headlamp Bulb Service Kit H13	ns	28587	Vehicle Control Harness
134	28808-1	Cover Screws Service Kit (pkg of 3)			

ns = not shown

Copyright © 2020 Douglas Dynamics, LLC. All rights reserved. This material may not be reproduced or copied, in whole or in part, in any printed, mechanical, electronic, film, or other distribution and storage media, without the written consent of TrynEx International, LLC. Authorization to photocopy items for internal or personal use by TrynEx International outlets or snowplow owner is granted.

TrynEx International reserves the right under its product improvement policy to change construction or design details and furnish equipment when so altered without reference to illustrations or specifications used. TrynEx International or the vehicle manufacturer may require or recommend optional equipment for snow removal. Do not exceed vehicle ratings with a snowplow. TrynEx International offers a limited warranty for all snowplows and accessories. See separately printed page for this important information. The following are registered (®) or unregistered (™) trademarks of Douglas Dynamics, LLC: Automatixx®, Scrape Maxx™, SECURITY GUARD™, SnowEx®.

Lit. No. 73966, Rev. 03 Printed in U.S.A. October 15, 2020

TrynEx International, LLC
531 Ajax Drive
Madison Heights, MI 48071-2429
www.snowexproducts.com

Rotary Broom
with Snow Blade
SS-4000

Utility Tailgate Spreaders
SP-100, SP-125, SP-225, SP-325, SR-210

UTV Snowplows
V-Plow & Straight Blade

Bulk Pro™
Tailgate Spreaders
SP-1575, SP-1875

UTV Hopper Spreader
SP-2000

Walk-Behind Spreaders
SP-65, SP-85, SP-85SS, SP-5, SR-95SS

Liqui Maxx™
Modular Sprayer System

Brine Pro™
BP-2000