Data Sheet

LD 1680 AU - 09.2026-0004

640 Australian Version

Volumetric Meter - Brass Body with Electronic Register

Applications

The 640 is a high precision meter.
Due to its unique piston and measuring chamber design, the smallest drops of water are measured.
With the 640 you are assured of lasting metrology.
The 640 meter range includes an electronic register with integrated radio functionality which enables easy and fast communication.
Due to our broad range of system solutions you can adapt the 640 to all your AMR, AMI requirements.
The protection class of the electronic register of the 640 family is IP 68.
With a tamper proof design and its long life span you can be confident when selecting the 640.



Main characteristics

- DN 20, MAP 16, T50 (temperature range 0.1 to 50 °C)
- Small pressure drop
- Easy to handle
- Meets current and anticipated regulations for potable water
- Quiet operation
- Ready for wireless communication with integrated radio functionality (available in 433 MHz)
- Long lasting battery life expectation inclusive of metrology and radio function
- The register includes two lithium batteries

Approvals

- NMI R49 Cert No. 14/3/38
- OIML Certificate of conformity (N° R49-1/2003-DE1-07.02)

In compliance with

- OIML R49:2013
- ISO 4064:2014

Certificate of compliance for potable drinking water

- AS/NZS 4020: 2018
- Double Check Valve compliant with AS2845.1-2010
- DZR brass Body compliant withAS2345-2006
- KTW/DVGW (Germany)
- ACS (France)
- WRAS (UK)
- Hydrocheck (Belgium)
- KIWA ATA (Netherlands)

qualityaustria
SYSTEM CERTIFIED
ISO 9001:2015 No.03496/0

Metrological characteristics in accordance with measuring instruments directive

Nominal Size	DN	mm	20
Permanent flowrate	Q_3	m³/h	4
Ratio “R”	Q_3/ Q_1	R	400*
Maximum flowrate	Q_4	m³/h	5
Minimum flowrate (tolerance ±5%)	Q_1	l/h	10
Transitional flowrate (tolerance ±2%)	Q_2	l/h	16.0
Accuracy class			± 2 % ($Q_2 \leq Q \leq Q_4$) for water temperatures ≤ 30 °C
			± 3 % ($Q_2 \leq Q \leq Q_4$) for water temperatures > 30 °C
			± 5 % ($Q_1 \leq Q \leq Q_2$)
Temperature range			0.1 °C ... 50 °C
Pressure range (MAP)			0.3 bar (0.03 MPa) - 16 bar (1.6 MPa)
Pressure loss class ΔP			0.63 bar (0.063 MPa)
Environmental class			B / O
Electromagnetic Conditions			E2

* further available ratios Q_3 / Q_1: 315, 250, 200

Battery Lifetime

Radio interval profile 640 with 15 years battery lifetime [1]	
wM-Bus T1	SensusRF
≥ 3600 sec	BUP 15 sec / LAT 60 sec

1. Calculated lifetime with typical power consumption of electronics under allowed ambient conditions

Starting flow

DN 20	Q_3 4	2l/h

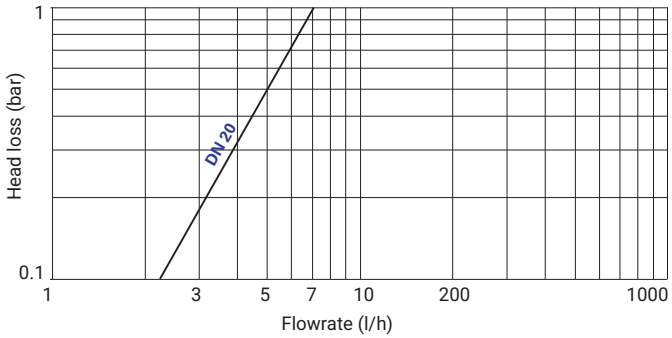

Typical Headloss Curve

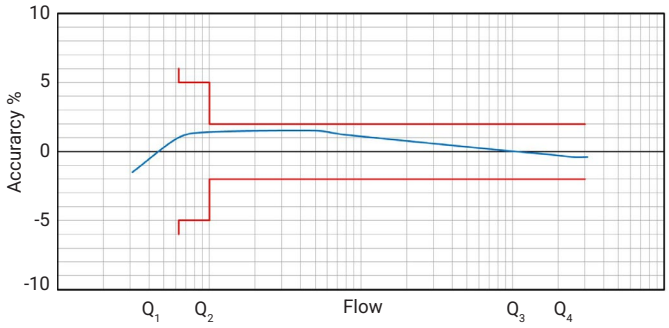

Typical Error Curve

Accuracy and Reliability

Thanks to the advanced design of its measuring chamber the meter has a low starting flow.

Foreign matter present in the water is filtered out byeither the tubular strainer on the inlet or the seat strainer. All electronic components of the register are hermetically sealed and assembled in a glass copper casing which allow the protection class IP68.

The 640 water meter retains its metrological accuracy for many years of operation, even in difficult working conditions.

Cross Section

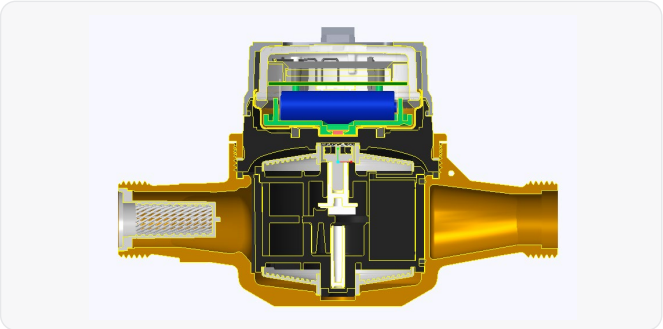

640, DN 20

Dimensional Diagram

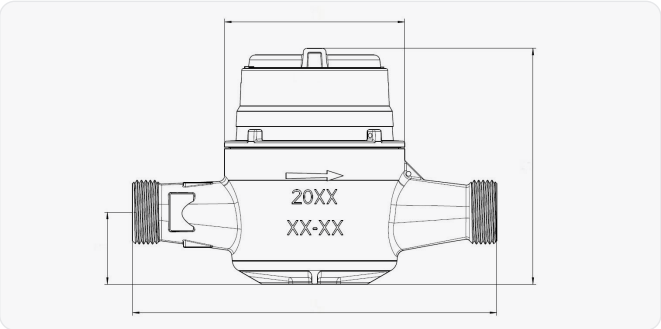

640, DN 20

Legibility

The display with 9 digits (6 for m^3, 3 for litres) ensures exceptional readability. The highest resolution in testing mode is 0.05 litres.
Icons are also displayed on the LCD to indicate important information have been registered:

- Alarm is triggered
- Low battery level is reached
- Radio is activated
- System is set up in hydraulic testing mode
- Indicates positive or negative flow
- Indicates the unit programmed in use

Dimensions and weights

Nominal size	DN	mm	20	
Length	L	mm	154	
Width	D	mm	93.5	
Total height	H	mm	123	
Height to pipe axis	h	mm	37.5	
Thread Type			Nut and Tail (AS3565.1)	Ball joint (AS3565.1)
Thread Diameter	Ø	mm	32.50	36.60
Threads Per Inch			14	14
Weight		kg	1.55	1.55

For the installation guidelines please refer to the manual “Volumetric Meter Manual” on our website.

640 Infrastructure

The 640 product range has SensusRF integrated technology providing the advantages of both uni- and bidirectional system architecture as described below. SensusRF is the optimized license free radio system for battery driven endpoints and repeaters. Scalable for mobile and remote reading without exchange of components, it is available in 433 MHz.
OMS® compatible.

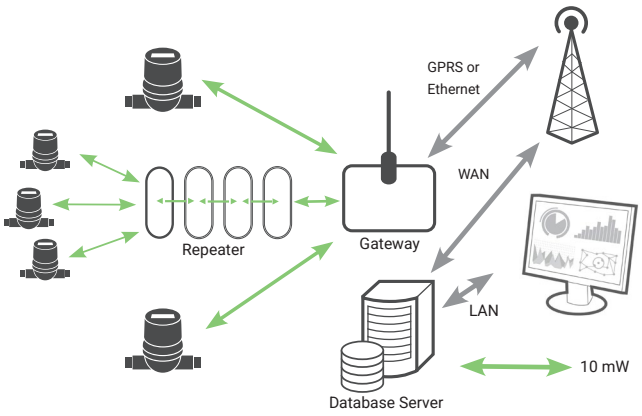

640 Fixed radio network - Remote Access & Monitoring

SensusRF offers two communication modes

1. Fixed Radio Network

- Auto configuration wizard
  (gateway sniffing for endpoints and repeaters)
- Integrating repeaters (up to 7 hops in a chain)
- Self-healing network (using alternative routes)
- Meter reading transparent and local
- Fast track alarms
- DMA snap shot
  (snap shot of a water network for evaluation)
- TCP/IP technology for the WAN communication
- High level of data security (end-to-end encryption)
- Enables cloud technologies, FTP and other remote database applications

2. Mobile read - Walk-by / Drive-by

- Unidirectional telegrams
- Bidirectional communication
- Spontaneous reception possible without route
- Configuration of the endpoint

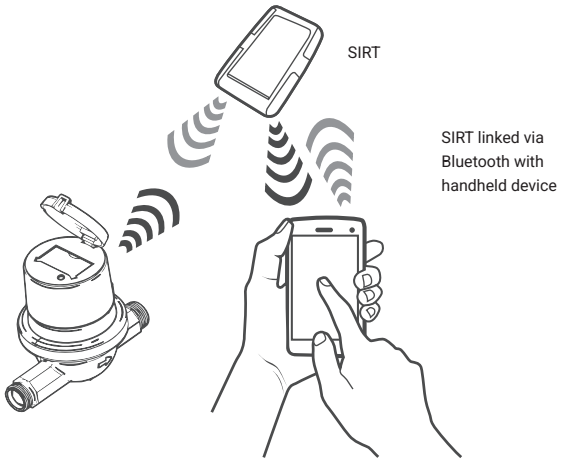

Unidirectional/Bidirectional communication

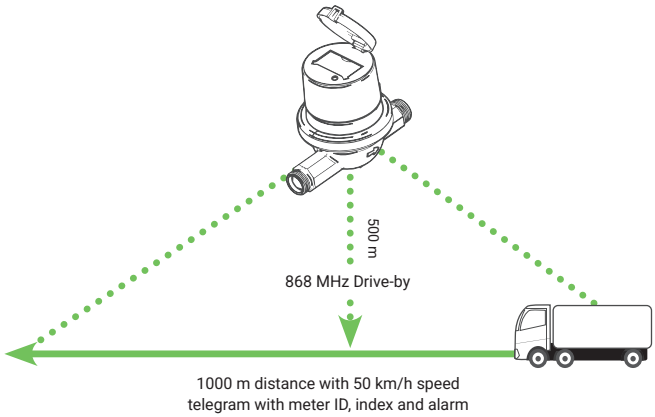

SIRT (Sensus Interface Radio Tool)

SIRT is a radio modem for SensusRF radio, connected to a handheld via Bluetooth and using DIAVASO Mobile Reading software with the following features:

- Installation and readout of devices
- Reception of frequently transmitted radio messages from Sensus RF radio endpoints
- Request additional information from the radio endpoints
- Change configuration of radio endpoints
  (alarm, level settings...)

For further information please refer to the SensusRF brochure.

Sensus International Australia Pty Ltd
25b Commercial Road,
Notting Hill Victoria, 3168, Australia

Contact:
info@sensus-int.com
www.sensus-international.com

© 2026 Sensus International. All trademarks, logos and brand names are the property of their respective owners. All rights reserved.