SENSUS INTERNATIONAL

Data Sheet

LD 1680 EN - 09.2026-0009

640

Volumetric Meter - Brass Body with Electronic Register

Applications

The 640 is a high-precision meter.
Due to its unique piston and measuring chamber design, the smallest drops of water are measured.
With the 640, you are assured of lasting metrology.
The 640 meter range includes an electronic register with integrated radio functionality, which enables easy and fast communication.
Due to our broad range of system solutions, you can adapt the 640 to all your AMR and AMI requirements.
The protection class of the electronic register of the 640 family is IP 68.
With a tamper-proof design and its long lifespan, you can be confident when selecting the 640.



Main characteristics

- DN 15 to 40, MAP 16, T50 (temperature range 0.1 to 50 °C)
- Small pressure drop
- Easy to handle
- Meets current and anticipated regulations for potable water
- High resistance to impurities and aggressive water
- Quiet operation
- Ready for wireless communication with integrated radio functionality (available in different frequencies)
- Long lasting battery life expectation inclusive of metrology and radio function
- The register includes two lithium batteries

Certificate of compliance for potable drinking water

- KTW/DVGW (D)
- ACS (F)
- WRAS (UK)
- Hydrocheck (B)
- KIWA ATA (NL)

Approvals

EU type-/design examination certificate in conformity with

- 2014/32/EU (MID)
- OIML R49:2013
- EN 14154-4:2014
- ISO 4064:2017

- Q_3 2.5 DE-07-MI001-PTB002
- Q_3 4 DE-09-MI001-PTB004
- Q_3 6.3 - 16 DE-15-MI001-PTB019

qualityaustria
SYSTEM CERTIFIED
ISO 9001:2015 No.03496/0

Metrological characteristics in accordance with measuring instruments directive

Nominal Size	DN	mm	15	20	25	25, 32	40
Permanent flowrate	Q_3	m³/h	2.5	4	6.3	10	16
Ratio “R”	Q_3/Q_1	R	400*		315**		
Maximum flowrate	Q_4	m³/h	3.125	5	7.875	12.5	20
Minimum flowrate (tolerance ±5%)	Q_1	l/h	6.25	10	20	32	51
Transitional flowrate (tolerance ±2%)	Q_2	l/h	10.0	16.0	32.0	51.0	81.0
Accuracy class		± 2 % ($Q_2 \le Q \le Q_4$) for water temperatures ≤ 30 °C					
		± 3 % ($Q_2 \le Q \le Q_4$) for water temperatures > 30 °C					
		± 5 % ($Q_1 \le Q \le Q_2$)					
Temperature range		0.1 °C ... 50 °C					
Pressure range (MAP)		0.3 bar (0.03 MPa) - 16 bar (1.6 MPa)					
Pressure loss class ΔP		0.63 bar (0.063 MPa)					
Environmental class		I					
Mechanical Environmental Conditions		M2					
Climatic Environmental Conditions		5 °C ... 70 °C					
Electromagnetic Conditions		E2					

* Further available ratios Q_3 / Q_1: 315, 250, 200, 160, 125, 100, 80, 63, 50, 40
** Further available ratios Q_3 / Q_1: 250, 200, 160, 125, 100, 80, 63, 50, 40

Accuracy and Reliability

Thanks to the advanced design of its measuring chamber the meter has a low starting flow. It can be supplied with metrological seal according the MID regulation 2014/32/EU with a ratio up to R400.

Foreign matter present in the water is filtered out by either the tubular strainer on the inlet or the seat strainer. All electronic components of the register are hermetically sealed and assembled in a glass copper casing which allow the protection class IP68.

The 640 water meter retains its metrological accuracy for many years of operation, even in difficult working conditions.

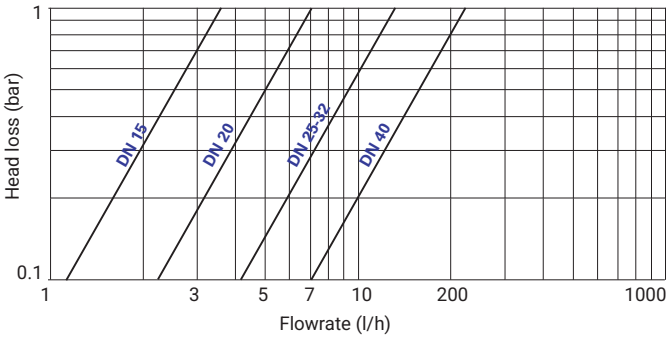

Typical Headloss Curve

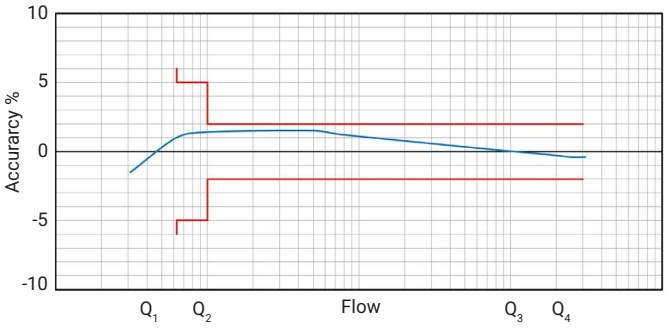

Typical Error Curve

Typical Marking

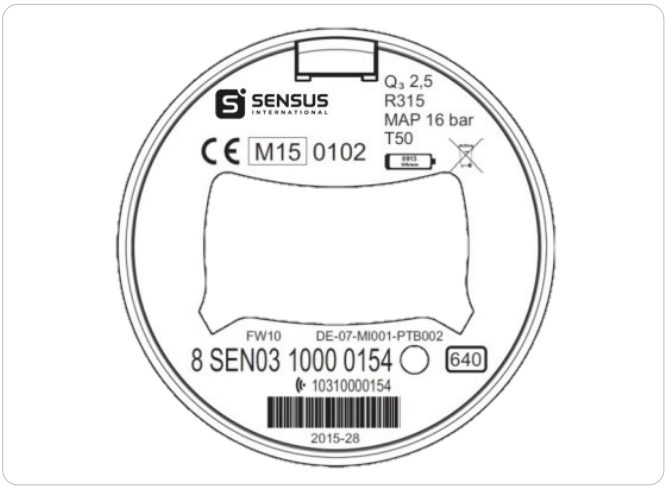

Markings may vary depending on particular markets or metrological specifications.

Battery Lifetime

Radio interval profile 640 with 15 years battery lifetime [1]	
wM-Bus T1	SensusRF
≥ 3600 sec	BUP 15 sec / LAT 60 sec

1. Calculated lifetime with typical power consumption of electronics under allowed ambient conditions

Starting flow

DN 15	Q_3 2.5	1l/h
DN 20	Q_3 4	2l/h
DN 25	Q_3 6.3	7l/h
DN 25, DN 32	Q_3 10	7l/h
DN 40	Q_3 16	12-15 l/h

Cross Section

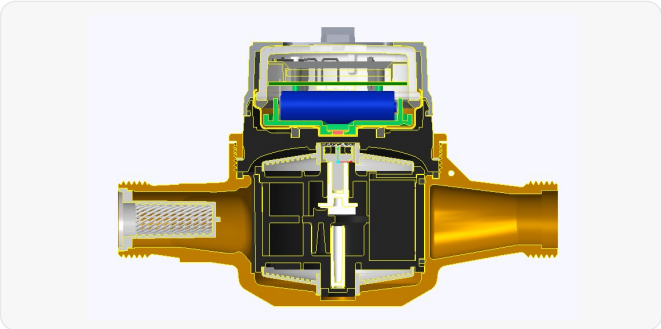

640, DN 20

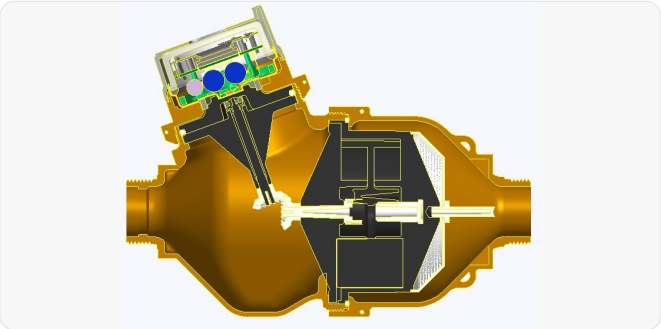

640, DN 32

Legibility

The display with 9 digits (6 for m^3, 3 for litres) ensures exceptional readability. The highest resolution in testing mode is 0.05 litres.
Icons are also displayed on the LCD to indicate important information has been registered:

- Alarm is triggered
- Low battery level is reached
- Radio is activated
- System is set up in hydraulic testing mode
- Indicates positive or negative flow
- m^3 Indicates the unit programmed in use

Dimensions and weights

Nominal size	DN	mm	15	20	25	32	40
Length	L	mm	170[1)]	190[3)]	260[4)]	260	300
Width	D	mm	79.7	93.5	135	135	150
Total height	H	mm	132.7	123	186	186	193
Height to pipe axis	h	mm	15.5	37.5	68	68	75
Tail	Ø	inch	G¾"B[2)]	G1"B	G1¼"B	G1½"B	G2"B
Piece		mm	26.44	33.25	41.91	47.80	59.61
Thread	Pitch		1.81	2.31	2.31	2.31	2.31
Weight		kg	1.0	1.6	3.7	3.8	5.0

1. Also available in length 110, 115, 134 and 165 mm
2. Also available in length 165 mm with 1" threads
3. Also available in length 130 and 165 mm
4. Also available in length 198 mm (with Q_3 4)

Dimensional Diagram

For the installation guidelines please refer to the manual "Volumetric Meter Manual" on our website.

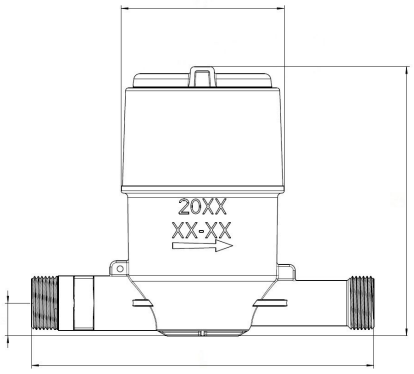

640, DN 15

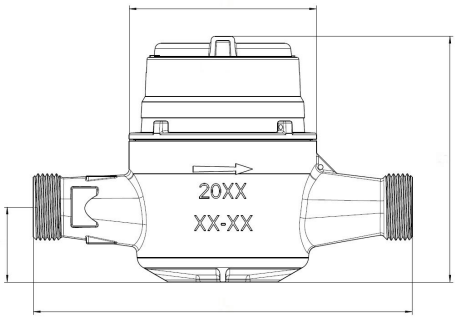

640, DN 20

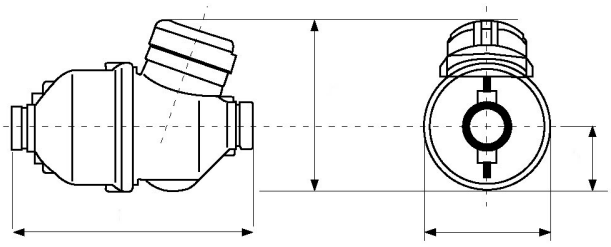

640, DN 25-40

640 Infrastructure

The 640 product range has SensusRF integrated technology providing the advantages of both uni- and bidirectional system architecture as described below. SensusRF is the optimized license free radio system for battery driven endpoints and repeaters. Scalable for mobile and remote reading without exchange of components, it is available in 433 MHz and 868 MHz. OMS® compatible.

SensusRF offers two communication modes:

1. Fixed Radio Network

- Auto configuration wizard (gateway sniffing for endpoints and repeaters)
- Integrating repeaters (up to 7 hops in a chain)
- Self-healing network (using alternative routes)
- Meter reading transparent and local
- Fast track alarms
- DMA snap shot (snap shot of a water network for evaluation)
- TCP/IP technology for the WAN communication
- High level of data security (end-to-end encryption)
- Enables cloud technologies, FTP and other remote database applications

2. Mobile read - Walk-by / Drive-by

- Unidirectional telegrams
- Bidirectional communication
- Spontaneous reception possible without route
- Configuration of the endpoint

SIRT (Sensus Interface Radio Tool)

SIRT is a radio modem for SensusRF radio, connected to a handheld via Bluetooth and using DIAVASO Mobile Reading software with the following features:

- Installation and readout of devices
- Reception of frequently transmitted radio messages from SensusRF radio endpoints
- Request additional information from the radio endpoints
- Change configuration of radio endpoints (alarm, level settings...)

For further information please refer to the SensusRF brochure.

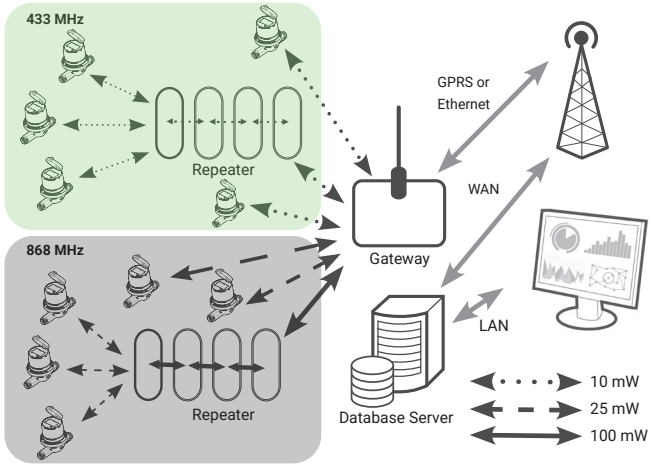

640 Fixed radio network - Remote Access & Monitoring

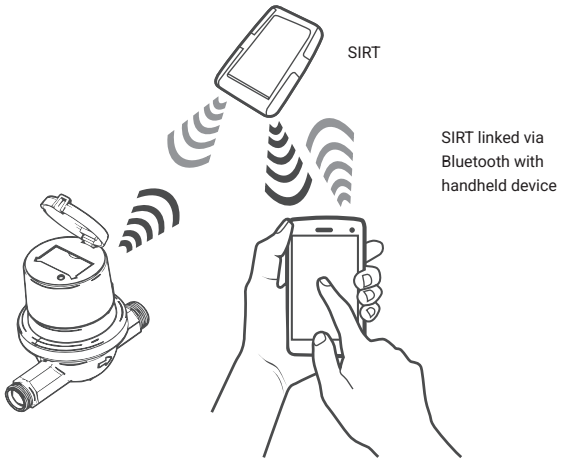

Unidirectional/Bidirectional communication

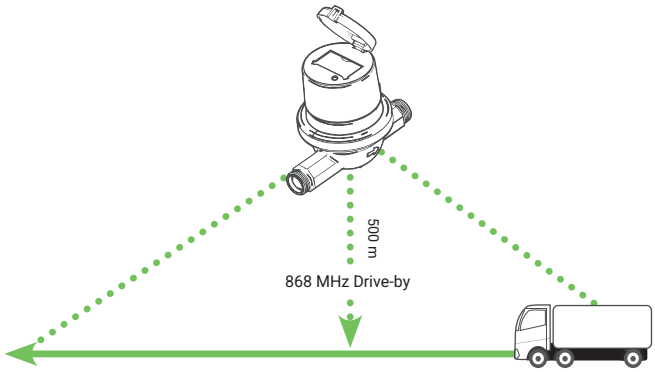

Sensus Germany GmbH & Co. KG
Industriestr. 16
67063 Ludwigshafen am Rhein, Germany

Contact:
info@sensus-int.com
www.sensus-international.com

© 2026 Sensus International. All trademarks, logos and brand names are the property of their respective owners. All rights reserved.