SOR – ORLÉANS™

HIGH-END CONVECTOR

ORLÉANS™



5 YEAR* WARRANTY

INNOVATION THAT MAXIMIZES YOUR COMFORT

With its unique design, the Orléans convector offers a faster temperature rise than any other convector on the market, ensuring optimal comfort in no time at all. In addition, the convector is available in optional colours exclusive to Stelpro, colours that will enhance even the simplest decor. Offering energy efficiency, an adapted profile and a wide variety of models, the Orléans is now the benchmark for high-end convectors.

- **STYLISH AND COMPACT DESIGN**
  30% SLIMMER CONVECTOR†
- **OPTIMUM EFFICIENCY**
  25% FASTER TEMPERATURE RISE†
- **BUILT-IN THERMOSTAT AVAILABLE (OPTIONAL)**
- **QUICK AND EASY INSTALLATION**
  EXCLUSIVE BRACKET SYSTEM
- **TOTALLY QUIET**

COLOURS

standard: white
Orora (optional): refer to stelpro.com/orora/

FINISH

- epoxy-polyester powdercoat

MANUFACTURING

- 20-gauge steel cabinet and front
- aluminum grille and sides
- bottom air intake and top air discharge
- the cabinet height improves the chimney effect
- safe, rounded corners
- easy access to controls
- thermal protection with automatic reset

ELEMENTS

- aluminum extrusion
- two X-shaped elements to generate maximum heat

CONTROL

- built-in electronic thermostat
- colour-coded feedback for responsible energy consumption
- drastic temperature drop detection (open window function)

INSTALLATION

- surface
- wall mounted at least 4 in. from the floor
- innovative mounting bracket for easy height adjustment
- back entry plate with cable clamps (included)

WARRANTY

- five years, *three years on electronic components

† Compared to similar convectors. Temperature rise is laboratory tested.

PATENTS PENDING

IDEAL FOR:

living room, kitchen, bedroom, office, hallway, basement, commercial space, waiting room, conference room

FC_SOR_EN_160925

STELPRO

Stelpro reserves the right to modify at any time the description, manufacturing, or price of its products. Additionally, Stelpro may apply restocking fees or refuse a refund based on one or more of the following criteria: optional color, custom product, assembly with low-demand options. For the latest product information and prices regarding the products, please visit the website www.stelpro.com.

TECHNICAL SPECIFICATIONS

BUILT-IN THERMOSTAT	WITHOUT THERMOSTAT	POWER	VOLTAGE	LENGTH		WEIGHT	
CODE	CODE	WATTS	VOLTS	MM	IN.	KG	LB
STANDARD MODEL – HEIGHT OF 17 7/8 IN. (455 MM)							
SOR0502EW	**SOR0502WCW**	500/375	240/208	457	18	4.8	10.7
SOR1002EW	**SOR1002WCW**	1000/750	240/208	597	23 1/2	6	13.2
SOR1502EW	**SOR1502WCW**	1500/1125	240/208	743	29 1/4	7.2	15.9
SOR2002EW	**SOR2002WCW**	2000/1500	240/208	895	35 1/4	9.7	21.4
HIGH MODEL – HEIGHT OF 27 7/8 IN. (708 MM)							
SORH1002EW	**SORH1002WCW**	1000/750	240/208	457	18	6.8	15
SORH1502EW	**SORH1502WCW**	1500/1125	240/208	623	24 1/2	8.8	19.4
SORH2002EW	**SORH2002WCW**	2000/1500	240/208	768	30 1/4	10.5	23.2
LOW MODEL – HEIGHT OF 13 IN. (330 MM)							
SORL1002EW	**SORL1002WCW**	1000/750	240/208	750	29 1/2	5.2	11.5
SORL1502EW	**SORL1502WCW**	1500/1125	240/208	1113	38 7/8	6.9	15.2
SORL2002EW	**SORL2002WCW**	2000/1500	240/208	1276	50 1/4	8.3	18.3

Consult the optional colour chart and contact your Stelpro representative for all other colours.
Mechanical wall thermostats are not compatible with the without thermostat model (WC). An electronic thermostat is required.

ACCESSORIES

PRODUCT	DESCRIPTION
SORRE153*	built-in electronic low voltage relay [15 A @ 120 V-347 V] for SOR models
SORHRE153*	built-in electronic low voltage relay [15 A @ 120 V-347 V] for SORH models
SORLRE153*	built-in electronic low voltage relay [15 A @ 120 V-347 V] for SORL models
SORRE153T*	built-in electronic low voltage relay c/w transformer 24 V [15 A @ 208 V-347 V] for SOR models
SORHRE153T*	built-in electronic low voltage relay c/w transformer 24 V [15 A @ 208 V-347 V] for SORH models
SORLRE153T*	built-in electronic low voltage relay c/w transformer 24 V [15 A @ 208 V-347 V] for SORL models

Electronic relays can receive a PWM (pulsed width modulation) or digital (on/off) signal.
* Factory installed

TECHNICAL DRAWINGS

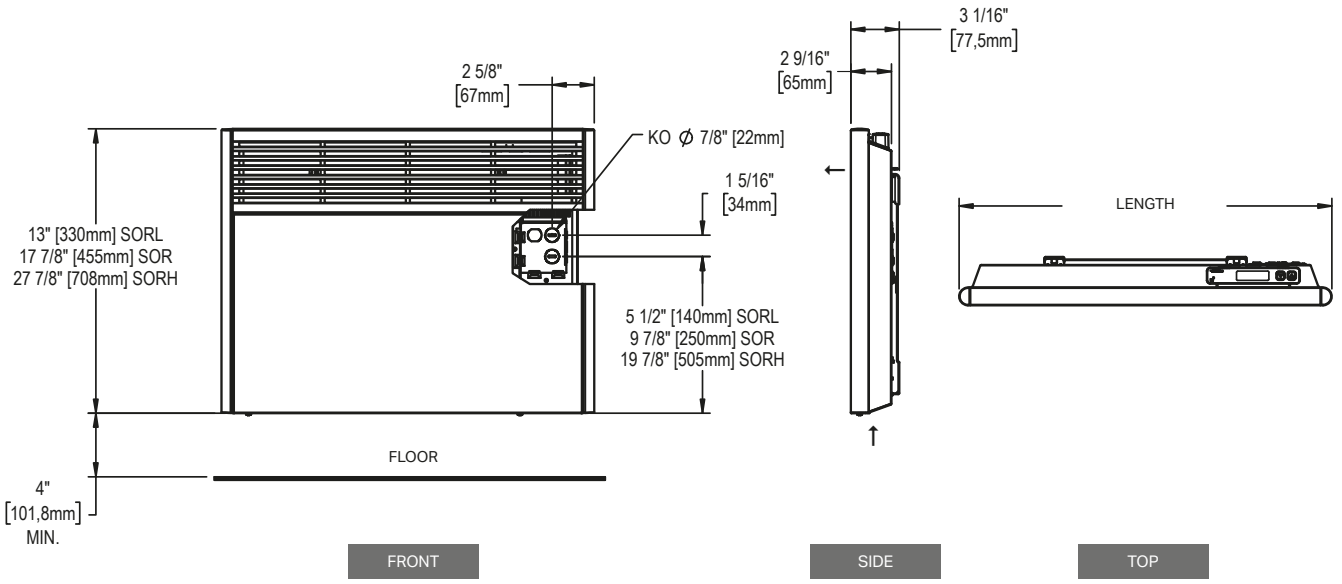

Stelpro reserves the right to modify at any time the description, manufacturing, or price of its products. Additionally, Stelpro may apply restocking fees or refuse a refund based on one or more of the following criteria: optional color, custom product, assembly with low-demand options. For the latest product information and prices regarding the products, please visit the website www.stelpro.com.



Stelpro reserves the right to modify at any time the description, manufacturing, or price of its products. Additionally, Stelpro may apply restocking fees or refuse a refund based on one or more of the following criteria: optional color, custom product, assembly with low-demand options. For the latest product information and prices regarding the products, please visit the website www.stelpro.com.