POWER EDGE INDUSTRIES

Excellence In Every Sealing Performance.

INDUSTRY WE SERVE :

- PHARMACEUTICAL
- PETROCHEMICALS
- REFINERIES
- POWER PLANT
- FERTILIZERS
- FOOD & BEVERAGES
- MARINE
- CHEMICAL



MANUFACTURER & SUPPLIER OF

ALL TYPES OF MECHANICAL SEALS, PUMPS SPARES & SERVICE,

VARIOUS TYPES OF RUBBER, TEFLON, NYLON PRODUCTS & ROTARY JOINTS,

POWER EDGE INDUSTRIES



OUR STORY

Poweredge Industries was established with a vision driven by over 8 years of industry experience. The company specializes in mechanical seals and advanced sealing solutions for pumps used across chemical process industries. With strong technical expertise in machining, design, and troubleshooting, Poweredge Industries is committed to delivering precision-engineered, reliable, and efficient sealing solutions tailored to meet diverse industrial requirements.

Driven by a commitment to precision and engineering excellence, Poweredge Industries began its journey with a vision to manufacture high-quality, reliable components that drive industrial innovation. Starting from a modest workshop, the company has grown into a trusted manufacturing partner serving diverse industries. By combining advanced technology, modern manufacturing techniques, and skilled craftsmanship, we strive to deliver products that meet the highest standards of quality, performance, efficiency, and engineering excellence.

Our state-of-the-art manufacturing facility in Khali, Siddhpur, Gujarat, is equipped with modern machinery, including CNC, lathe, drilling, grinding, and lapping equipment. This advanced infrastructure allows Poweredge Industries to manufacture precision-engineered mechanical seals and pumps designed to meet diverse customer requirements. Backed by rigorous quality control measures, we ensure superior product quality, consistent performance, and long-term reliability. Our mechanical seals and pumps are widely utilized across chemical process industries, delivering efficient, durable, and dependable sealing solutions for challenging industrial applications.

WHY CHOOSE US

OUR MISSION

Our mission is to provide high precision mechanical components and manufacturing solutions that uphold the highest standards of quality, performance, efficiency, and innovation. We are committed to contributing to our clients' success through advanced technology, expert craftsmanship, reliable solutions, and continuous improvement in every aspect of our operations.

OUR VISION

Our vision is to become a globally recognized leader in mechanical manufacturing, renowned for precision, innovation, quality, and trust. We aspire to set new benchmarks in engineering excellence and performance through advanced solutions, while driving industrial growth and creating lasting value for our partners worldwide.

OUR CORE VALUES

We are committed to delivering precise, reliable, and high-quality products and services. Through innovation and continuous improvement, we provide tailored solutions that meet our clients' needs. We believe in building strong relationships through teamwork, trust, and collaboration.

SEAL TYPE 211 / 212 / 213 - RUBBER BELLOW

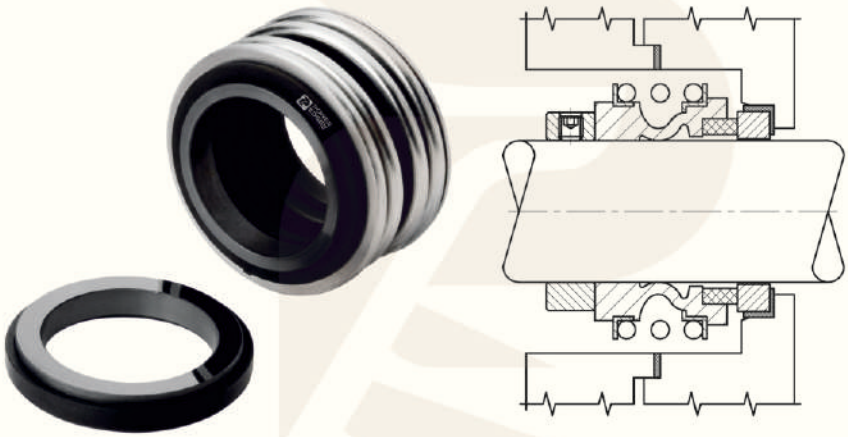

FEATURES

Unbalanced Pusher Type, Internally Mounted Rubber Bellows Mechanical Seal with Independent Direction of Rotation.

MATERIALS

Seal Ring Faces	:	Carbon, SiC and TC
Seat Faces	:	NiR, Ceramic, SiC and TC
Elastomer	:	Viton, Neoprene, EPDM, NBR and Buna-N
MOC	:	SS 304 / SS 316

OPERATING CAPABILITIES

Shaft Dia	:	10mm to 100mm
Pressure	:	Up to 8 bar
Temperature	:	-20°C to 180°C
Speed	:	3600 r.p.m.

SEAL TYPE 221 - RUBBER BELLOW

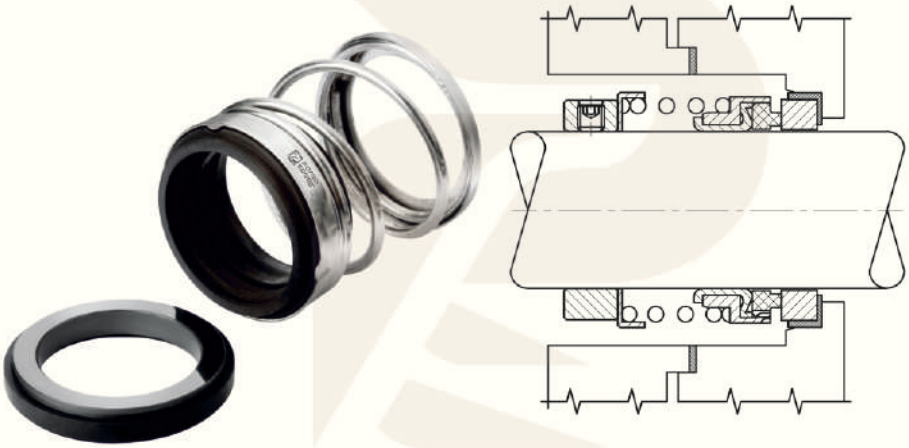

FEATURES

Unbalance Pusher Inside Mounted Rubber Bellow Seal. Independent Direction of Rotation.

MATERIALS

Seal Ring Faces	:	Carbon, SiC and TC
Seat Faces	:	NiR, Ceramic, SiC and TC
Elastomer	:	Viton, Neoprene, EPDM, NBR and Buna-N
MOC	:	SS 304 / SS 316

OPERATING CAPABILITIES

Shaft Dia	:	10mm to 100mm
Pressure	:	Up to 8 bar
Temperature	:	-20°C to 180°C
Speed	:	3600 r.p.m.

SEAL TYPE 231 - CONICAL SPRING

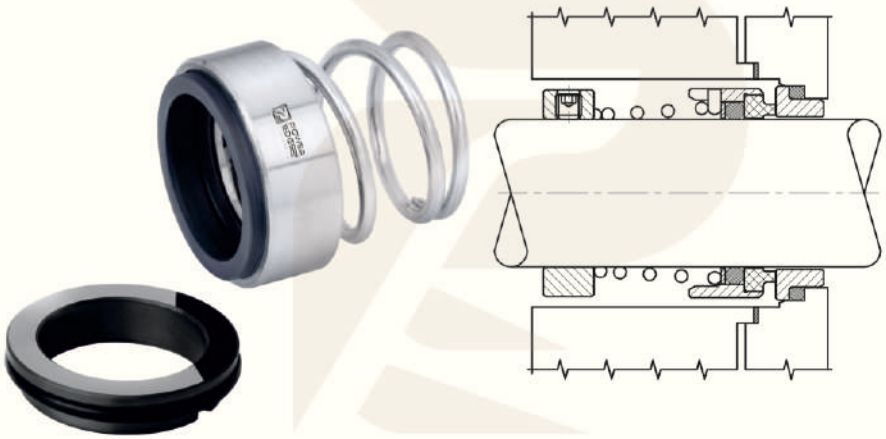

FEATURES

Unbalance pusher inside mounted conical coil Spring mechanical seal. Secondary seal as O' ring. Independent direction of rotation with Central tapered spring

MATERIALS

Seal Ring Faces	:	Carbon, SiC and TC
Seat Faces	:	NiR, Ceramic, SiC and TC
Elastomer	:	Viton, Neoprene, EPDM, NBR and Buna-N
MOC	:	SS 304 / SS 316

OPERATING CAPABILITIES

Shaft Dia	:	10mm to 100mm
Pressure	:	Up to 7 bar
Temperature	:	-20°C to 140°C
Speed	:	3600 r.p.m.

SEAL TYPE 241 & 242 - SINGLE COIL SPRING

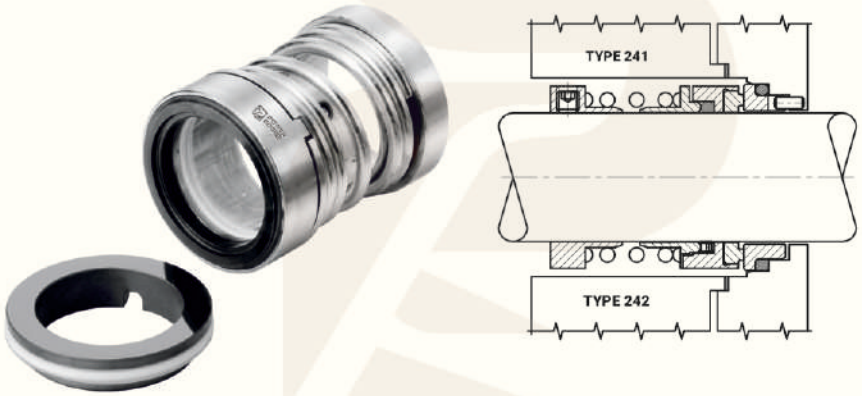

FEATURES

Unbalance pusher Seal. Inside mounted Helical Single coil Spring mechanical seal. Secondary seal as O' ring (Type 241) and 'V' packing as (Type 242). Independent direction of rotation .

MATERIALS

Seal Ring Faces	:	Carbon, SiC and TC
Seat Faces	:	NiR, Ceramic, SiC and TC
Elastomer	:	Viton, PTFE, GFT, TTV, EPDM, NBR and Buna-N
MOC	:	SS 316

OPERATING CAPABILITIES

Shaft Dia	:	10mm to 100mm
Pressure	:	Up to 10 bar
Temperature	:	-20°C to 150°C
Speed	:	3600 r.p.m.

SEAL TYPE 243 & 244 - SINGLE COIL SPRING

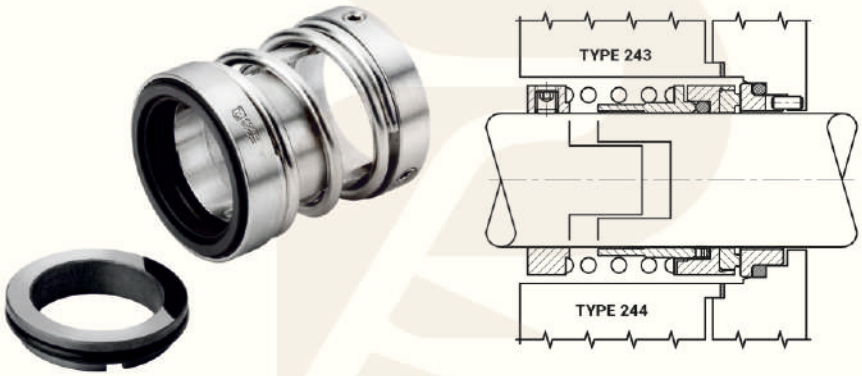

FEATURES

Unbalance pusher Seal. Inside mounted Helical Single coil Spring mechanical seal. Secondary seal as O' ring (Type 243) and 'V' packing as (Type 244). Independent direction of rotation through sturdy lugs.

MATERIALS

Seal Ring Faces	:	Carbon, SiC and TC
Seat Faces	:	Ceramic, SiC and TC
Elastomer	:	Viton, PTFE, GFT, TTV, EPDM, NBR and Buna-N
MOC	:	SS 316

OPERATING CAPABILITIES

Shaft Dia	:	10mm to 100mm
Pressure	:	Up to 10 bar
Temperature	:	-20°C to 150°C
Speed	:	3600 r.p.m.

SEAL TYPE 251U & 252U - MULTI SPRING

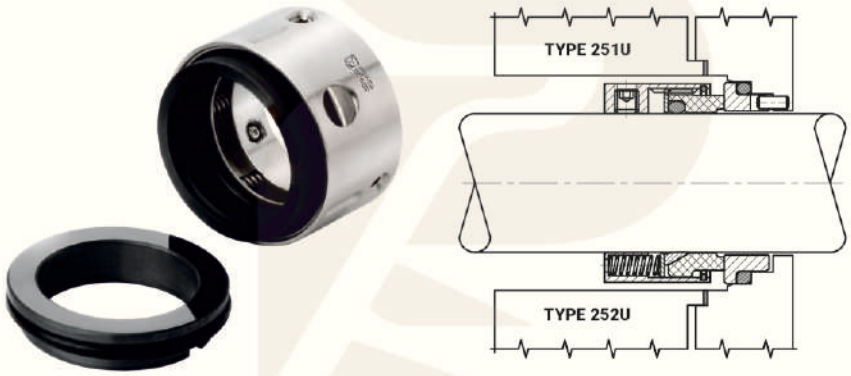

FEATURES

Unbalance pusher Seal. Inside mounted Multi Spring type mechanical seal. Secondary seal as O' ring (Type 251U) and PTFE Wedge as (Type 252U). Dual directional design.

MATERIALS

Seal Ring Faces	:	Carbon, SiC and TC
Seat Faces	:	Ceramic, SiC and TC
Elastomer	:	Viton, PTFE, GFT, EPDM, NBR, Buna-N and FFKM
MOC	:	SS 316, Hast-C and Alloy-20

OPERATING CAPABILITIES

Shaft Dia	:	10mm to 100mm
Pressure	:	Up to 10 bar
Temperature	:	-20°C to 260°C
Speed	:	3600 r.p.m.

SEAL TYPE 251B & 252B - MULTI SPRING

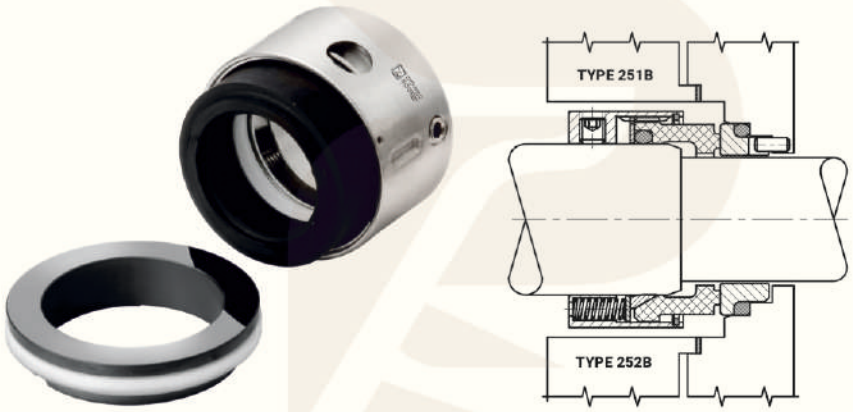

FEATURES

Balance pusher Seal. Inside mounted Multi Spring type mechanical seal. Secondary seal as O' ring (Type 251B) and PTFE Wedge as (Type 252B). Dual directional design.

MATERIALS

Seal Ring Faces	: Carbon, SiC and TC
Seat Faces	: Ceramic, SiC and TC
Elastomer	: Viton, PTFE, GFT, EPDM, NBR, Buna-N and FFKM
MOC	: SS 316, Hast-C & Alloy-20

OPERATING CAPABILITIES

Shaft Dia	: 10mm to 100mm
Pressure	: Up to 20 bar
Temperature	: -20°C to 260°C
Speed	: 3600 r.p.m.

SEAL TYPE 261U & 262U - SINGLE SPRING

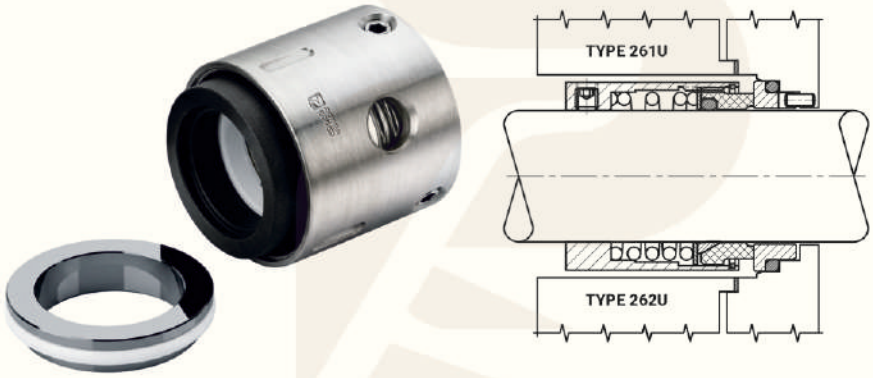

FEATURES

Unbalance pusher Seal. Inside mounted helical single coil Spring mechanical seal. Secondary seal as O' ring (Type 261U) and PTFE Wedge as (Type 262U). Independent direction of rotation.

MATERIALS

Seal Ring Faces	: Carbon, GFT, SiC and TC
Seat Faces	: Ceramic, SiC and TC
Elastomer	: Viton, PTFE, EPDM, NBR, Buna-N
MOC	: SS 316

OPERATING CAPABILITIES

Shaft Dia	: 10mm to 100mm
Pressure	: Up to 8 bar
Temperature	: -20°C to 200°C
Speed	: 3600 r.p.m.

SEAL TYPE 271 - PTFE BELLOW

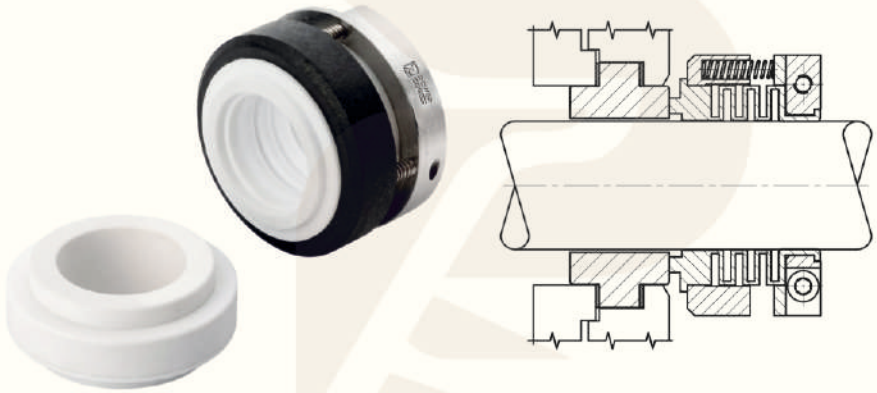

FEATURES

Outside mounted seal. Hydraulically balanced PTFE bellow mechanical seal. Independent direction of rotation. Dual directional multi spring design.

MATERIALS

Seal Ring Faces	: GFT, CFT and SiFT
Seat Faces	: Ceramic and SiC
Elastomer	: PTFE and GFT
MOC	: SS 316, Hast-C and Alloy 20
Bellow MOC	: PTFE + GFT Composite

OPERATING CAPABILITIES

Shaft Dia	: 16mm to 80mm
Pressure	: Up to 5 bar
Temperature	: -30°C to 110°C
Speed	: 3600 r.p.m.

SEAL TYPE 272 - PTFE BELLOW WITH REPLACEABLE FACE

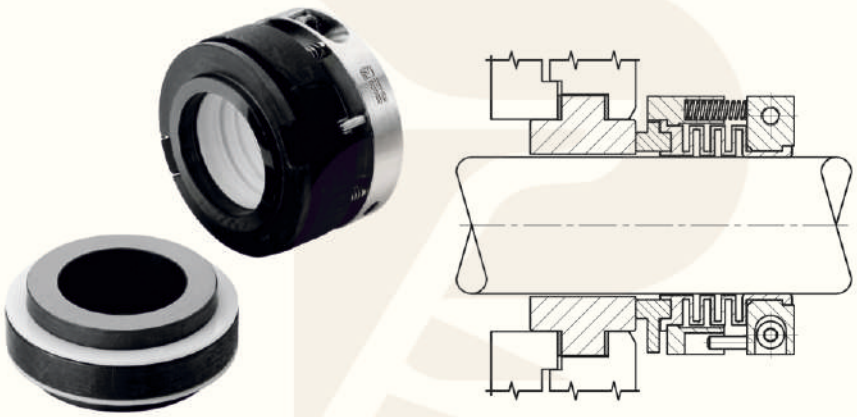

FEATURES

Outside mounted seal with replaceable face. Hydraulically balanced PTFE bellow mechanical seal. Independent direction of rotation. Dual directional multi spring design.

MATERIALS

Seal Ring Faces	:	GFT, Carban and SiC
Seat Faces	:	Ceramic and SiC
Elastomer	:	PTFE and GFT
MOC	:	SS 316, Hast-C and Alloy 20
Bellow MOC	:	PTFE + GFT Composite

OPERATING CAPABILITIES

Shaft Dia	:	10mm to 100mm
Pressure	:	Up to 20 bar
Temperature	:	-20°C to 260°C
Speed	:	3600 r.p.m.

SEAL TYPE 273 - REVERSE BALANCE MULTI SPRING

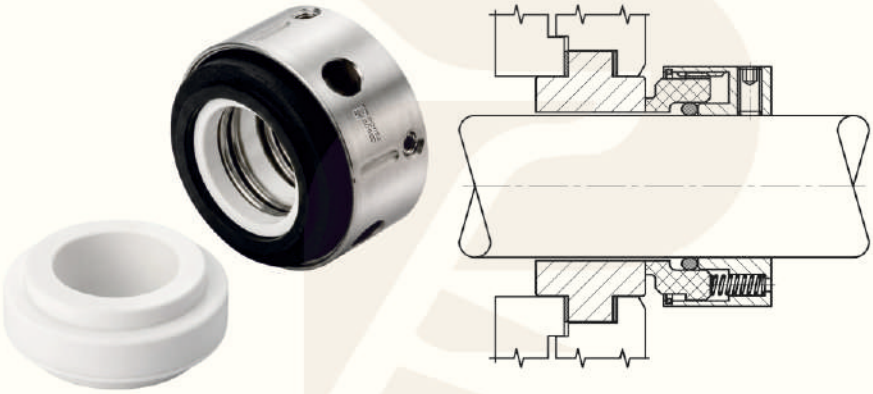

FEATURES

Outside mounted seal. Reverse balance design. All metallic parts isolated from pumping media. Independent direction of rotation. Dual directional multi spring design.

MATERIALS

Seal Ring Faces	:	Carbon and TC
Seat Faces	:	Ceramic and SiC
Elastomer	:	Viton, EPDM, TTV FEP and FFKM
MOC	:	SS 316, Hast-C and Alloy 20

OPERATING CAPABILITIES

Shaft Dia	:	16mm to 70mm
Pressure	:	Up to 8 bar
Temperature	:	Up to120°C
Speed	:	3600 r.p.m.

SEAL TYPE 274 - REVERSE BALANCE MULTI SPRING

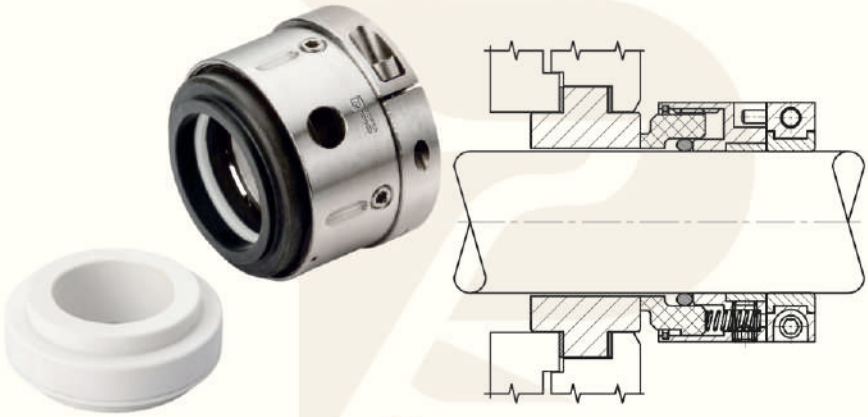

FEATURES

Outside mounted seal. Reverse balance design. All metallic parts isolated from pumping media. Especially design clampring eliminates slipping on shaft. Independent direction of rotation. Dual directional multi spring design.

MATERIALS

Seal Ring Faces	:	Carbon and SiC
Seat Faces	:	Ceramic and SiC
Elastomer	:	Viton, EPDM, TTV FEP and FFKM
MOC	:	SS 316, Hast-C and Alloy 20

OPERATING CAPABILITIES

Shaft Dia	:	16mm to 80mm
Pressure	:	Up to 8 bar
Temperature	:	Up to 120°C
Speed	:	3600 r.p.m.

SEAL TYPE 281 - METAL BELLOW (O-RING TYPE)

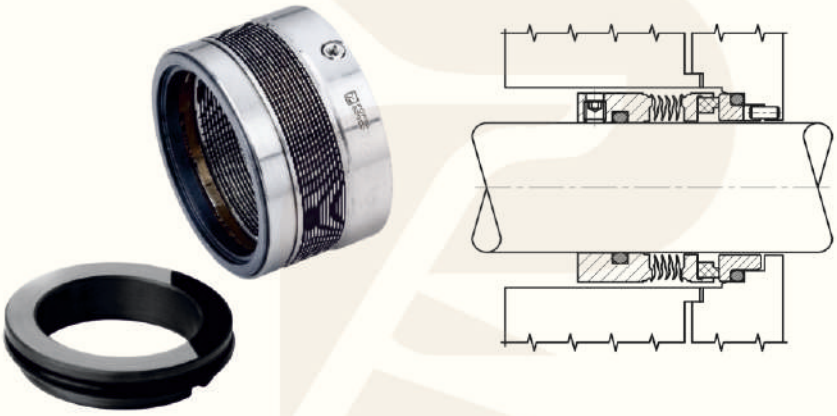

FEATURES

Single acting. Dual Directional design. Inside mounted seal. Inherently balanced metal bellow mechanical seal. Independent directional of rotation.

MATERIALS

Seal Ring Faces	: Carbon, SiC and TC
Seat Faces	: TC and SiC
Elastomer	: Viton, PTFE, FEP, EPDM and FFKM
End fitting MOC	: SS 316, Hast - C and Carpenter 42
Bellow MOC	: HAST - C, Am350, Inconel

OPERATING CAPABILITIES

Shaft Dia	: 25mm to 100mm
Pressure	: Up to 25 bar
Temperature	: -30˚C to 260˚C
Speed	: 3600 r.p.m.

SEAL TYPE 282 - METAL BELLOW

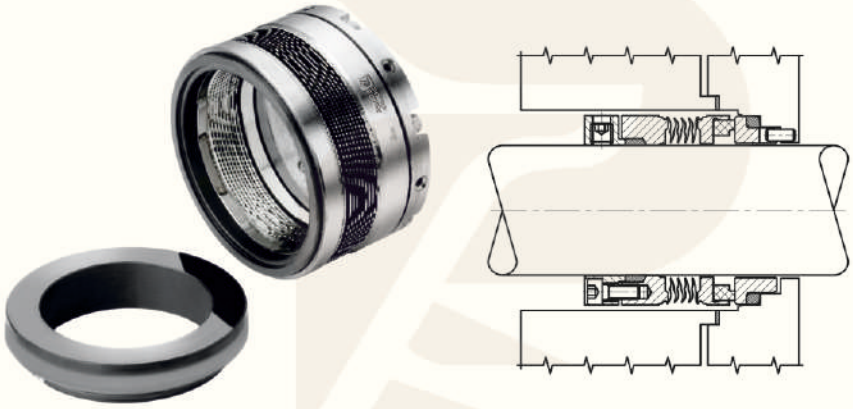

FEATURES

Single acting. Dual Directional design. Inside mounted seal. Inherently balanced metal bellow mechanical seal. Independent directional of rotation.

MATERIALS

Seal Ring Faces	: Carbon, SiC and TC
Seat Faces	: TC and SiC
Elastomer	: Flexible Graphite
End fitting MOC	: SS 316, Hast - C and Carpenter 42
MOC	: Hast - C, Am350, Inconel

OPERATING CAPABILITIES

Shaft Dia	: 25mm to 70mm
Pressure	: Up to 25 bar
Temperature	: -70˚C to 350˚C
Speed	: 3600 r.p.m.

SEAL TYPE 255 B/C - BALANCE CATRIDGE

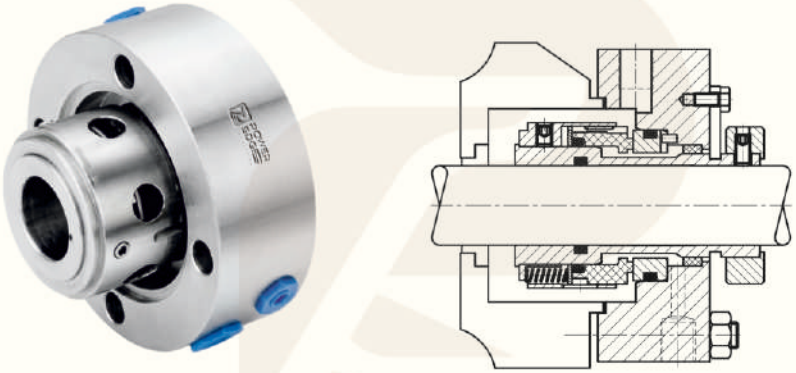

FEATURES

Single Cartridge balanced mechanical seal Dual directional design. Inside mounted seal. Unitized, easy-to-fit design.

MATERIALS

Seal Ring Faces	: Carbon, TC and SiC
Seat Faces	: SiC and TC
Elastomer	: Viton, PTFE, and FFKM
MOC	: SS 316, Hast-C and Alloy - 20

OPERATING CAPABILITIES

Shaft Dia	: 10mm to 100mm
Pressure	: Up to 35 bar
Temperature	: -30˚C to 260 ˚C
Speed	: 3600 r.p.m.

SEAL TYPE 282C/282D - METAL BELLOW CARTRIDGE



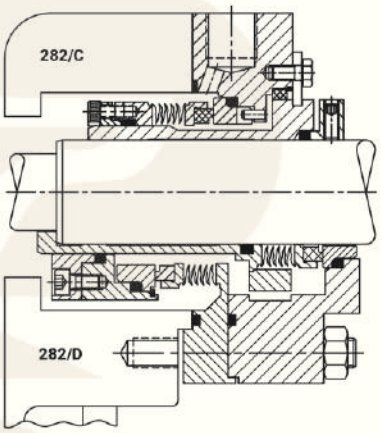

FEATURES

Single Cartridge mechanical seal. Dual directional design. Inside mounted seal. Inherently balanced metal bellow mechanical seal. Unitized, easy-to-fit design.

MATERIALS

Seal Ring Faces	: Carban SiC and TC
Seat Faces	: TC and SiC
Elastomer	: Flexible Graphite
End fitting MOC	: SS 316, Hast - C and Carpenterm 42
Bellow MOC	: HAST - C, Am350, Inconel

OPERATING CAPABILITIES

Shaft Dia	: 25mm to 100mm
Pressure	: Up to 25 bar
Temperature	: -70˚C to 350˚C
Speed	: 3600 r.p.m.

SEAL TYPE PE2600/D - DOUBLE CARTRIDGE



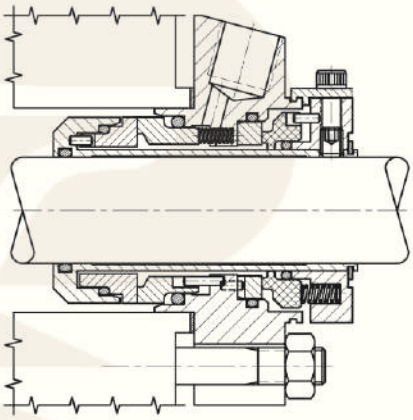

FEATURES

Double Cartridge Balanced mechanical seal. Dual directional design. Inside mounted seal. Unitized, easy - to - fit design.

MATERIALS

Seal Ring Faces	: Carbon, SiC and TC
Seat Faces	: TC and SiC
Elastomer	: Viton, PTFE, and FFKM
MOC	: SS 316, - Change Of MOC On Request

OPERATING CAPABILITIES

Shaft Dia	: 20mm to 70mm
Pressure	: Up to 15 bar
Temperature	: -30˚C to 260˚C
Speed	: 3600 r.p.m.

SEAL TYPE PE2800/S - SINGLE CARTRIDGE



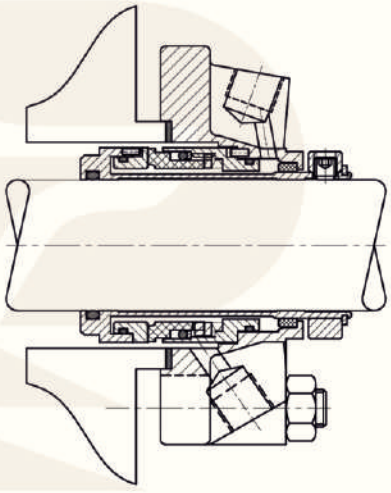

FEATURES

Single Cartridge balanced mechanical seal. Dual directional design. Non Clogging wave spring design. Inside mounted seal. Unitized, easy-to-fit design.

MATERIALS

Seal Ring Faces	: TC and SiC
Seat Faces	: SiC and TC
Elastomer	: Viton, PTFE, FEP and FFKM
MOC	: SS 316 - Change Of MOC On Request

OPERATING CAPABILITIES

Shaft Dia	: 25mm to 100mm
Pressure	: Up to 18 bar
Temperature	: -30˚C to 260˚C
Speed	: 3600 r.p.m.

SEAL TYPE PE2100/D - DOUBLE SEMI CARTRIDGE

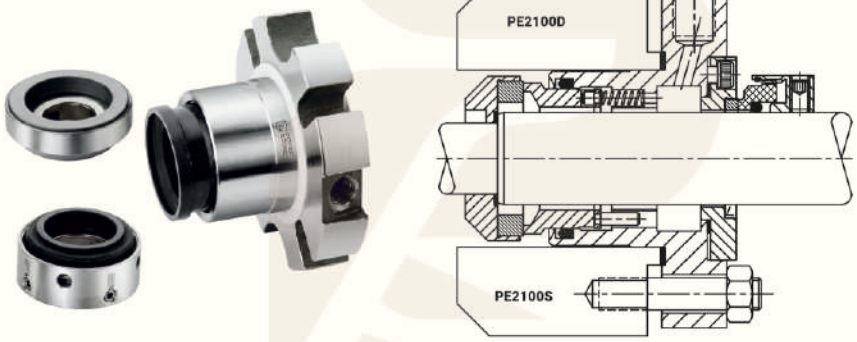

FEATURES

Double Semi - Cartridge mechanical seal. Dual directional design. Slurry seal up to 20%. Inside mounted seal. Balanced Seal.

MATERIALS

Seal Ring Faces	: SiC, Carban and TC
Seat Faces	: SiC and TC
Elastomer	: Viton, TTV, FEP and FFKM
MOC	: SS 316- Change of MOC On Request

OPERATING CAPABILITIES

Shaft Dia	: 20mm to 80mm
Pressure	: Full Vacuum to 8 bar
Temperature	: -30°C to 260°C
Speed	: 3600 r.p.m.

SEAL TYPE PE2200/D - DOUBLE SEMI CARTRIDGE WITH BACK PLATE

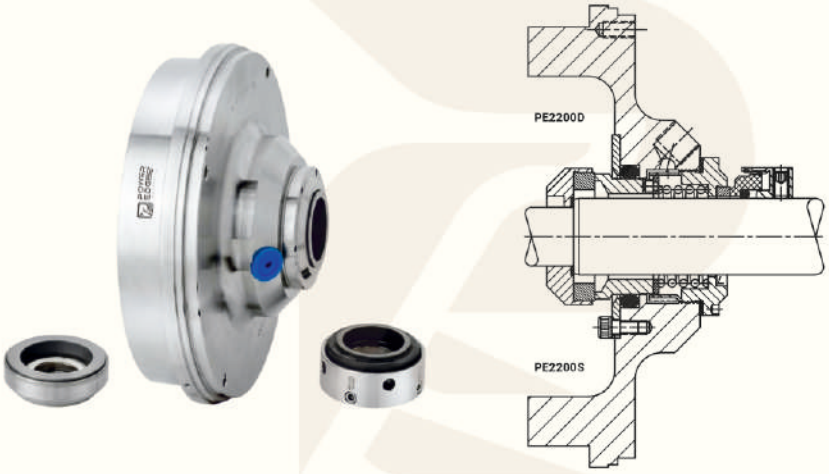

FEATURES

Double Semi - Cartridge mechanical seal. Slurry seal up to 60% due to it's specially design of stuffing box. Inside mounted seal. Balanced Seal.

MATERIALS

Seal Ring Faces	: SiC, Carbon and TC
Seat Faces	: SiC and TC
Elastomer	: Viton, TTV, FEP and FFKM
MOC	: SS 316 - Change Of MOC On Request

OPERATING CAPABILITIES

Shaft Dia	: 20mm to 80mm
Pressure	: Full Vacuum to 8 bar
Temperature	: -30°C to 260°C
Speed	: 3600 r.p.m.

SEAL TYPE PE2300/D - DOUBLE SEAL FOR NON-METALLIC PUMP

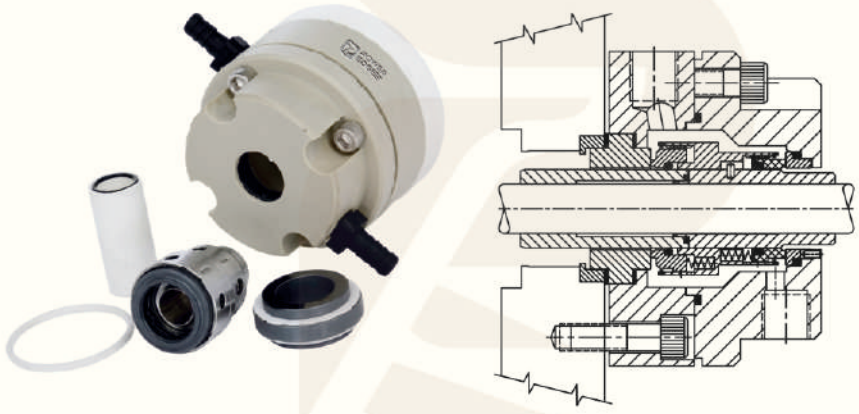

FEATURES

Double Reverse Balance Semi Cartridge Inside Mounted, Mechanical Seal For Non Metallic Pump (PP, PVDF), Suitable for API Plan 53, 54

MATERIALS

Seal Ring Faces	: Carbon, SiC
Seat Faces	: SiC and Ceramic
Elastomer	: FFKM, FKM, PTFE, GFT
MOC	: SS 316, Alloy-20, Hast-C and Other MOC as per Required

OPERATING CAPABILITIES

Shaft Dia	: 10mm to 100mm
Pressure	: Full Vaccum to 8 bar
Temperature	: -30° to 120°C
Speed	: 3600 r.p.m.

SEAL TYPE PE2300/251U/P IMS - SLURRY SEAL FOR NON-METALLIC PUMP



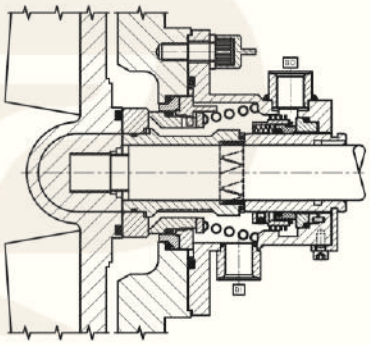

FEATURES

Double Cartridge mechanical seal. Abrasive Slurry seal up to 30% due to it's specially design of back plate and shaft. Additional pumping ring helps toi provide better lubrication to seal faces. Inside mounted seal Balanced seal.

MATERIALS

Seal Ring Faces	:	SiC and Carban
Seat Faces	:	SiC
Elastomer	:	Viton, FEP and FFKM
MOC	:	SS 316, PVDF - Change of MOC On Request

OPERATING CAPABILITIES

Shaft Dia	:	20mm to 80mm
Pressure	:	Up to 8 bar
Temperature	:	up to 120°C
Speed	:	3600 r.p.m.

TYPE PEAD 301 & PEAD 301/B - DRY RUNNING SEAL



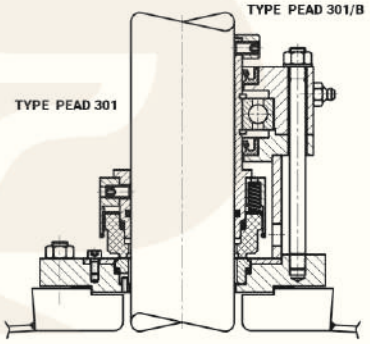

FEATURES

Dry running balanced mechanical seal. This Seals are excellent with low RPM operation in Vacuum pressure conditions. Design without bearing (Type - PEAD 301) OR with Integral bearing (Type - PEAD 301/B). Design for Top, Bottom and Side entry.

MATERIALS

Seal Ring Faces	:	Carbon and SiC
Seat Faces	:	SiC and TC
Elastomer	:	Viton, TTV, FEP and FFKM
MOC	:	SS 316 - Change Of MOC On Request

OPERATING CAPABILITIES

Shaft Dia	:	20mm to 150mm
Pressure	:	Full Vacuum to 8 bar
Temperature	:	-30°C to 150°C
Speed	:	3000 r.p.m.

TYPE PEAD 311 & PEAD 311/B - DRY RUNNING SEAL FOR HIGH SPEED



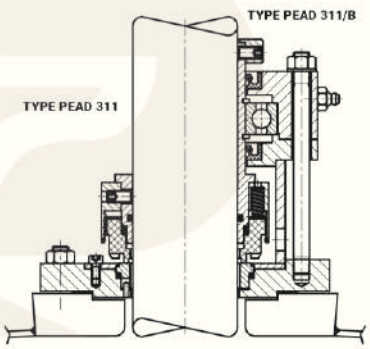

FEATURES

High speed Dry running balanced mechanical seal. This seal are excellent with High RPM operation in Vacuum and pressure conditions. Design without bearing (Type - PEAD 311) or with Integral bearing (Type - PEAD 311/B). Design for Top, Bottom and Side entry.

MATERIALS

Seal Ring Faces	:	Spl, Carbon
Seat Faces	:	SiC
Elastomer	:	Viton, TTV, FEP and FFKM
MOC	:	SS 316 - ChANGE OF MOC ON REQUEST

OPERATING CAPABILITIES

Shaft Dia	:	25mm to 150mm
Pressure	:	Full Vacuum to 8 bar
Temperature	:	-30°C to 140°C
Speed	:	900 r.p.m.

TYPE PEA 321/D & PEA 321/D/B - DOUBLE SEAL FOR SS REACTOR



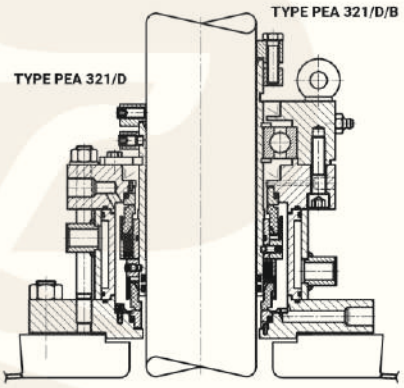

FEATURES

Double balanced mechanical seal. this seals arer excellent with low RPM operation in Vacuum and pressure conditions Design without bearing (Type - PEA 321/ D) OR with Integral bearing (Type - PEA 321/D/B).Design for Top, Bottom and Side entry .

MATERIALS

Seal Ring Faces	: Carbon and SiC
Seat Faces	: SiC and TC
Elastomer	: Viton, TTV, FEP and FFKM
MOC	: SS 316 - CHANGE OF MOC ON REQUEST

OPERATING CAPABILITIES

Shaft Dia	: 25mm to 200mm
Pressure	: Full Vacuum to 30 bar
Temperature	: -30°C to 260°C
Speed	: 300 r.p.m.

TYPE PEA 331/D/B - DOUBLE SEAL FOR HYDROGENATOR



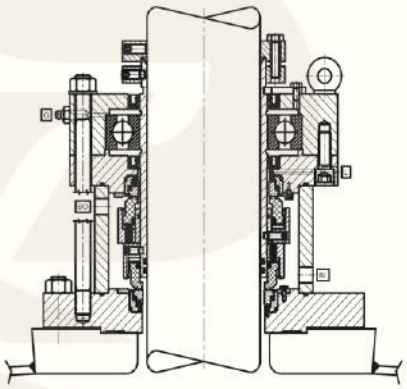

FEATURES

High Pressure Double balanced mechanical seal for Hydogenarator. This Seal is excellent with low RPM operation in Vacuum and High pressure conditions. Design with Integral bearing. Design for top entry.

MATERIALS

Seal Ring Faces	: Carbon and SiC
Seat Faces	: SiC and TC
Elastomer	: Viton, TTV, FEP, FFKM
MOC	: SS 316 - CHANGE OF MOC ON REQUEST

OPERATING CAPABILITIES

Shaft Dia	: 25mm to 200mm
Pressure	: Full Vacuum to 50 bar
Temperature	: -30°C to 260°C
Speed	: 400 r.p.m.

TYPE PE 341/D & 341/D/B - DOUBLE SEAL FOR MILL



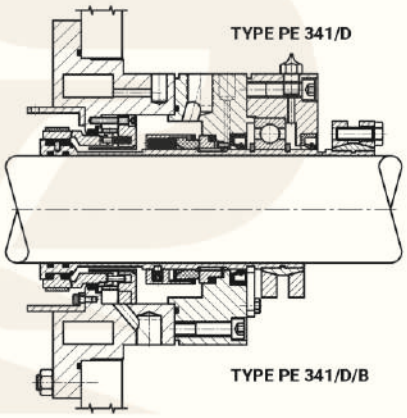

FEATURES

Double balanced mechanical seal for mil & mixtures. Seal are excellent with high RPM operation in Vacuum and pressure conditions. Design without bearing (Type PE 341/D) OR with Integral bearing (Type PE 341/D/B). Design for Side entry.

MATERIALS

Seal Ring Faces	: Carbon and SiC
Seat Faces	: SiC and TC
Elastomer	: Viton, TTV and FEP
MOC	: SS 316 - CHANGE OF MOC ON REQUEST

OPERATING CAPABILITIES

Shaft Dia	: 50mm to 85mm
Pressure	: Full Vacuum to10 bar
Temperature	: -30°C to 200°C
Speed	: 1500 r.p.m

TYPE PEA 351/D & PEA 351/D/B - DOUBLE SEAL FOR BOTTOM ENTRY



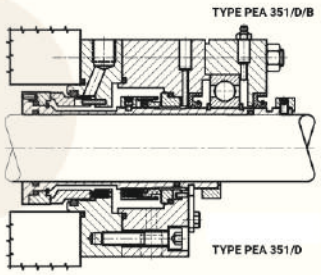

MATERIALS

Seal Ring Faces	: Carbon, SiC and TC
Seat Faces	: SiC and TC
Elastomer	: Viton, TTV, FEP and FFKM
MOC	: SS 316 - CHANGE OF MOC ON REQUEST

OPERATING CAPABILITIES

Shaft Dia	: 20mm to 150mm
Pressure	: Full Vacuum to 10 bar
Temperature	: -30°C to 260°C
Speed	: 300 r.p.m.

FEATURES

Double balanced mechanical seal seals are excellent with Low RPM operation in Vacuum and pressure conditions. Design without bearing (Type PEA 351/D) OR with Integral bearing (Type PEA 351/D/B).. Design for Side and Bottom entry.

TYPE PEA 361 & PEA 361/B - DRY RUNNING SEAL FOR GLASS LINED



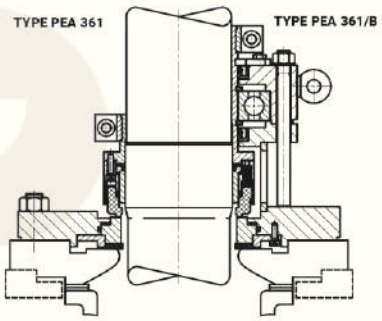

MATERIALS

Seal Ring Faces	: Carbon and SiC
Seat Faces	: SiC Ceramic
Elastomer	: Viton, TTV FEP
MOC	: and FFKM SS 316 - CHANGE OF MOC ON REQUEST

OPERATING CAPABILITIES

Shaft Dia	: 25mm to 150mm
Pressure	: Full Vacuum to 8 bar
Temperature	: -30°C to 150°C
Speed	: 250 r.p.m.

FEATURES

Dry running balanced mechanical seal for glass lined reactor. This Seals are excellent with low RPM operation in Vacuum and pressure conditions. Design without bearing (Type PEA 361) OR With Integral bearing (Type PEA 361/B) Design for top entry.

TYPE PEA 371/D & 371/D/B - DOUBLE SEAL FOR GLASS LINED REACTOR



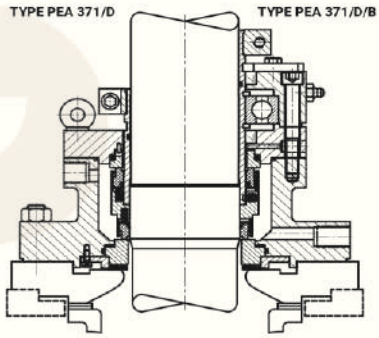

MATERIALS

Seal Ring Faces	: Carbon and SiC
Seat Faces	: Ceramic and SiC
Elastomer	: Viton, TTV FEP and FFKM
MOC	: SS 316 - CHANGE OF MOC ON REQUEST

OPERATING CAPABILITIES

Shaft Dia	: 25mm to 150mm
Pressure	: Full Vacumm to 14 bar
Temperature	: -30°C to 260°C
Speed	: 250 r.p.m.

FEATURES

Double balanced mechanical seal for Glass lined reactor. This seals are excellent with low RPMoperation in Vacuum and pressure conditions. Design without bearing (Type PEA 371/D) OR with Integral bearing (Type PEA 371/D/B). Design for Top entry.

TYPE PE 500 / D - FACE TO FACE SEAL



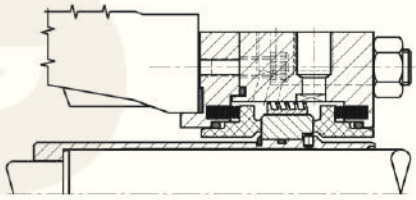

OPERATING CAPABILITIES

Shaft Dia	: 20mm to 100mm
Pressure	: Up to 60 bar
Temperature	: -30°C to 260°C
Speed	: 3600 r.p.m.

MATERIALS

Seal Ring Faces	: Sp. Carbon ,SiC
Seat Faces	: SiC and TC
Elastomer	: Viton, EPDM, NBR, FFKM
MOC	: SS 316, Duplex, Super Duplex, Hastelloy C, Monal

FEATURES

Face to Face double balanced mechanical seal. this seal is excellent high pressure and high speed conditions.

APPLICATION

Ideal for boiler feed water and heavy duty process pumps.

PEA 381 /D/B - DOUBLE MECHANICAL SEAL FOR ANFD

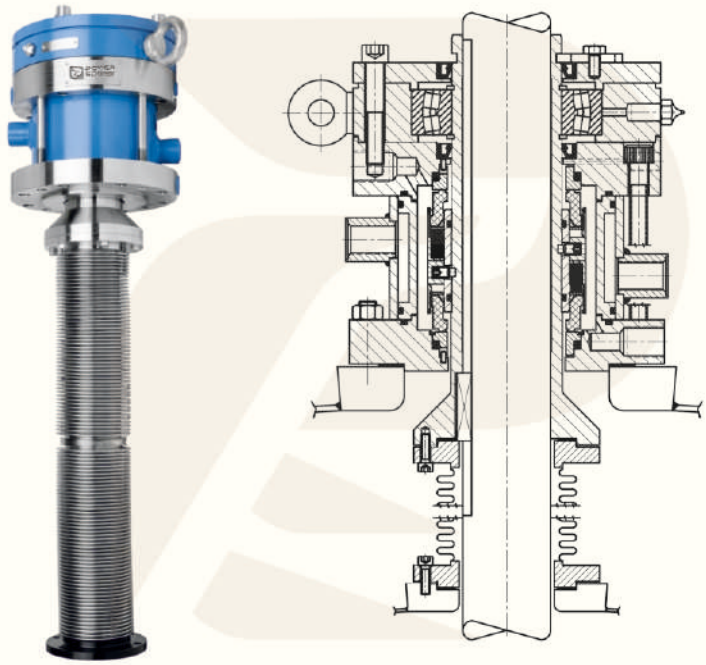

FEATURES

Double balanced mechanical seal for ANFD (Agitated Nutsche Filter Dryers). This Seal is excellent with low RPM operation in vacuum and pressure conditions. The Bellow assembly is for long fatique life. Design with solid antifriction linear Integral bearing (Type PEA 381/D/B). Design for top entry.

OPERATING CAPABILITIES

Shaft Dia	: 20mm to 200mm
Pressure	: Up to 5 bar
Temperature	: -30˚C to 260˚C
Speed	: 100 r.p.m.

MATERIALS

Seal Ring Faces	: Carban and SiC
Seat Faces	: SiC and TC
Elastomer	: Viton, PTFE, EPDM, NBR, FFKM
MOC	: SS 316,duplex, super duplex, Hastelloy C, Monal

APPLICATION

Agitated Nutsche filters and dryers
rotary Vacuum paddle dryers
horizontal reactors with expanding shaft

TYPE PEI - BEARING ISOLATOR

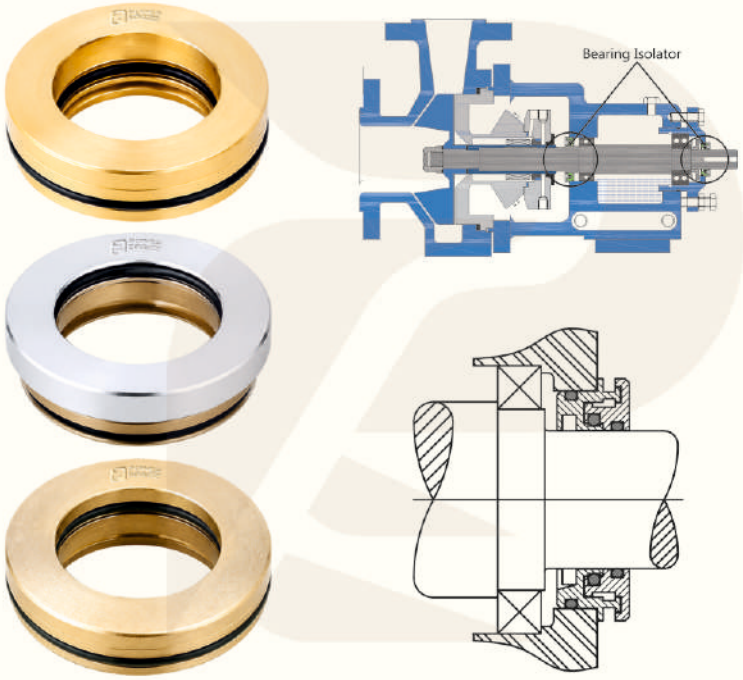

FEATURES

Bearing Isolator is Advanced Sealing Solution, That is used to Protect Bearings Againts Moisture, Grit and Dust, which Extending Bearing Life, No more Shaft Wearing as Compare to Conventional Oil Seal. Bearing Isolator Used in Rotating Equipment, such as Electric Motors, Gearboxes, Pumps and Turbines. In Simple Terms a Bearing Isolator Consists of a Stationary Component (Stator) and a Rotary Component (Rotor), The assembly of these components Creates a Narrow Labyrinth Path through the Seal, This Design Prevents Ingress of Contaminants in to a Bearing Arrangement.

FEATURES

Materials MOC	: Standard Material : Bronze on Request it can be Manufacturing in other Material such a Stainless Steel, Aluminium, PTFE
Range	: 15mm to 500mm
Temperature	: -30 to 200
Pressure	: 0 Bar

APPLICATION

- Pumps
- Electric Motors
- Gear Box
- Turbines
- Blowers

TYPES OF BEARING ISOLATOR

- Standard
- Magnetic
- Split Type
- Flage Type
- Surface Mount

ALL TYPES OF PUMP SPARES



High-quality pump spare parts designed for reliable performance, durability, and smooth operation across various industrial applications.

ALL TYPES OF ROTARY JOINT










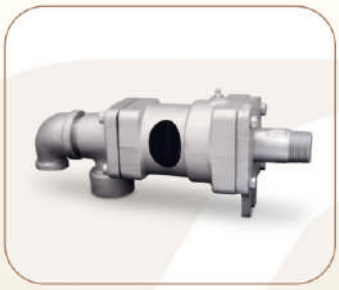















ALL TYPES OF RUBBER PRODUCT



SILICON RUBBER MOLDED SLEEVE



SILICON RUBBER FLANGE TYPE BELLOW



SILICON RUBBER METAL BONDING ROLL



SILICON SPONGES, STRIPS

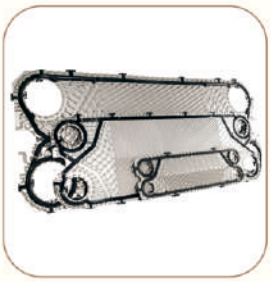

PHF GASKETS & PLATES



SILICON RUBBER BELLOW ONE ARCH



SILICON TRANSPARENT TUBES



SILICON CONICAL TYPE BELLOW



PTFE (TEFLON PRODUCTS)



SILICONE DIAPHRAGMS BUTTON TYPE



SILICONE RUBBER BELLOW



SILICONE RED FLANGE TYPE CONICAL PLAIN BELLOW



SILICONE MOULDING RUBBER BELLOW



SILICON BELLOW



SILICONE O-RING



SILICON SHEET



EPDM RUBBER EXPANSION BELLOW



SILICONE TRANSPARENT F.B.D. GASKET



BUTTER FLY GASKETS



BUTTERFLY GASKET



RUBBER DIAPHRAGMS



SILICON RUBBER MOLDED SLEEVE



SILICON TRANSPARENT FLANGE TYPE BELLOW



EPDM RUBBER EXPANSION BELLOW



RED SILICON RUBBER EXPANSION FLANGE TYPE CONICAL BELLOW

POWER EDGE INDUSTRIES

Excellence
In Every Sealing
Performance.



+91 94088 93882
+91 95860 82475

poweredgeindustries01@gmail.com

www.poweredgeindustries.com

Shop No 14, First Floor,
Dj Arcade, Beside Ronak Hotel,
Khali Char Rasta, Siddhpur - 384151,
Dist Patan, North Gujarat, India

ELITE PIX PACK
Reach us: +91 9687 429179