100 Thermal Broken Series Awning Window

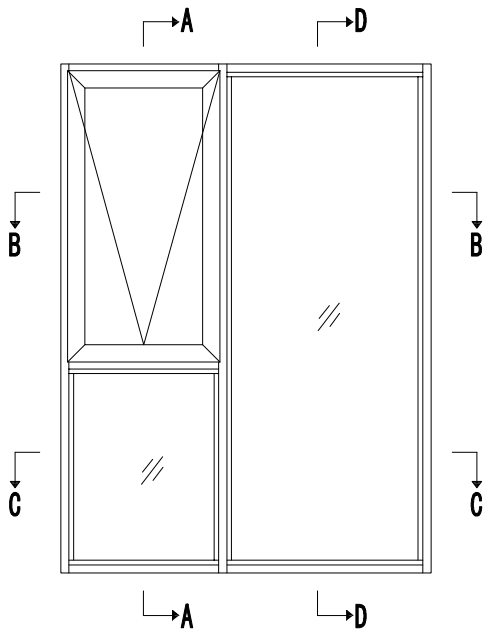

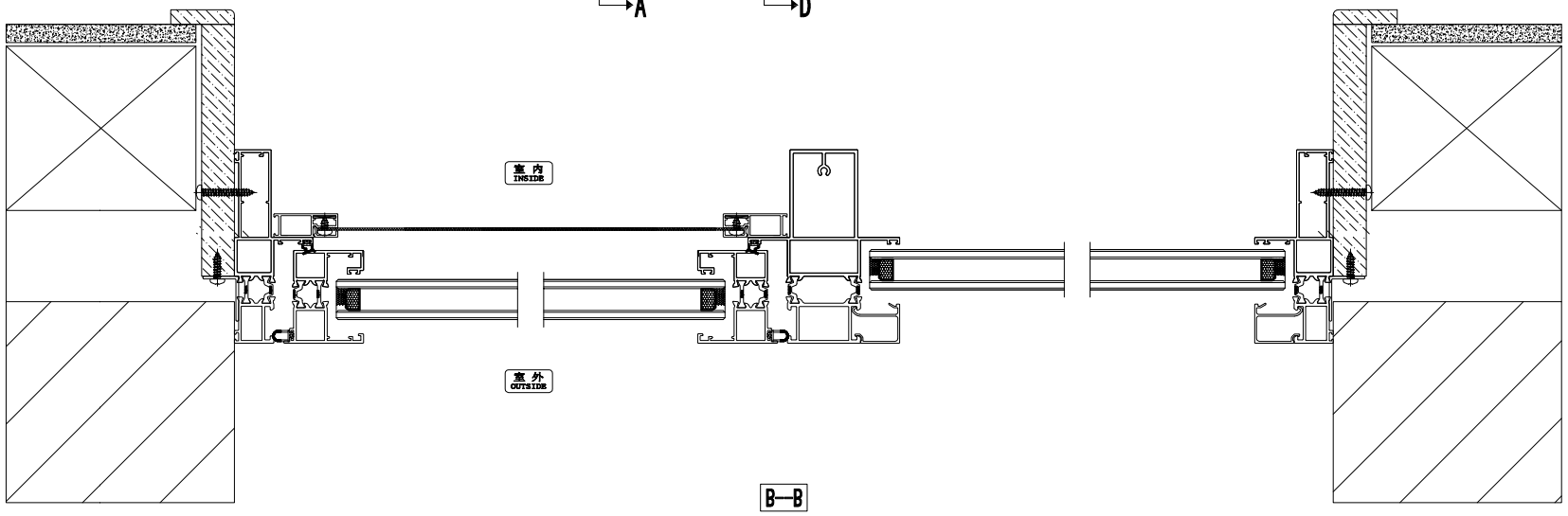

B—B

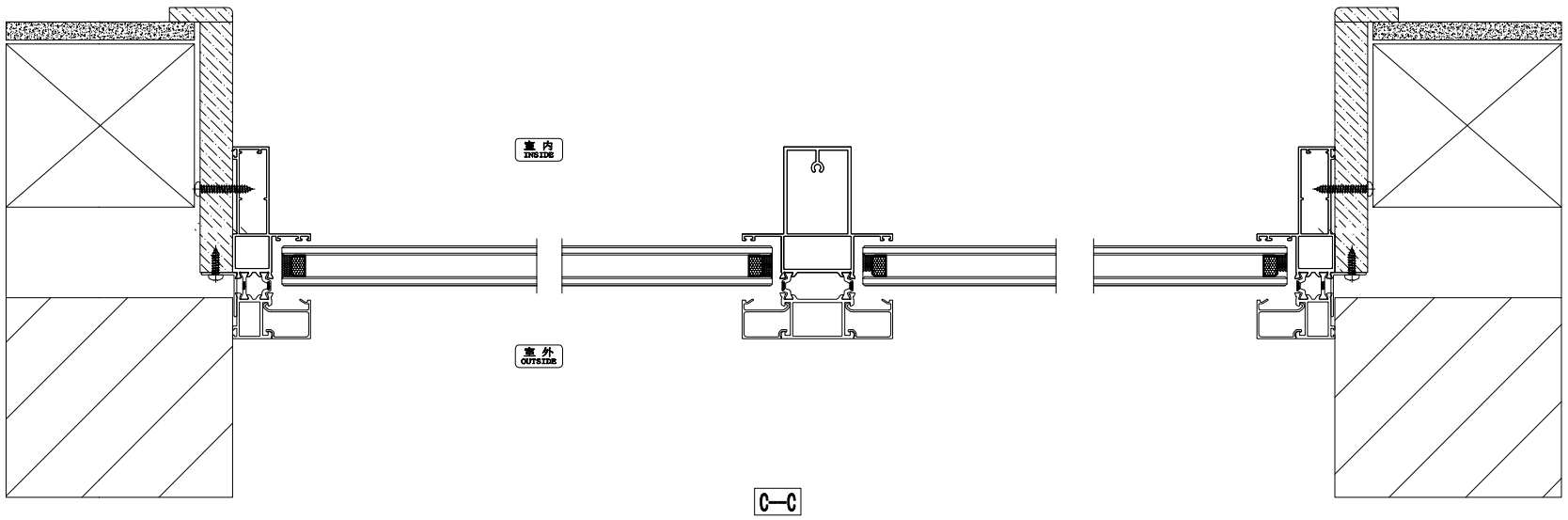

C—C

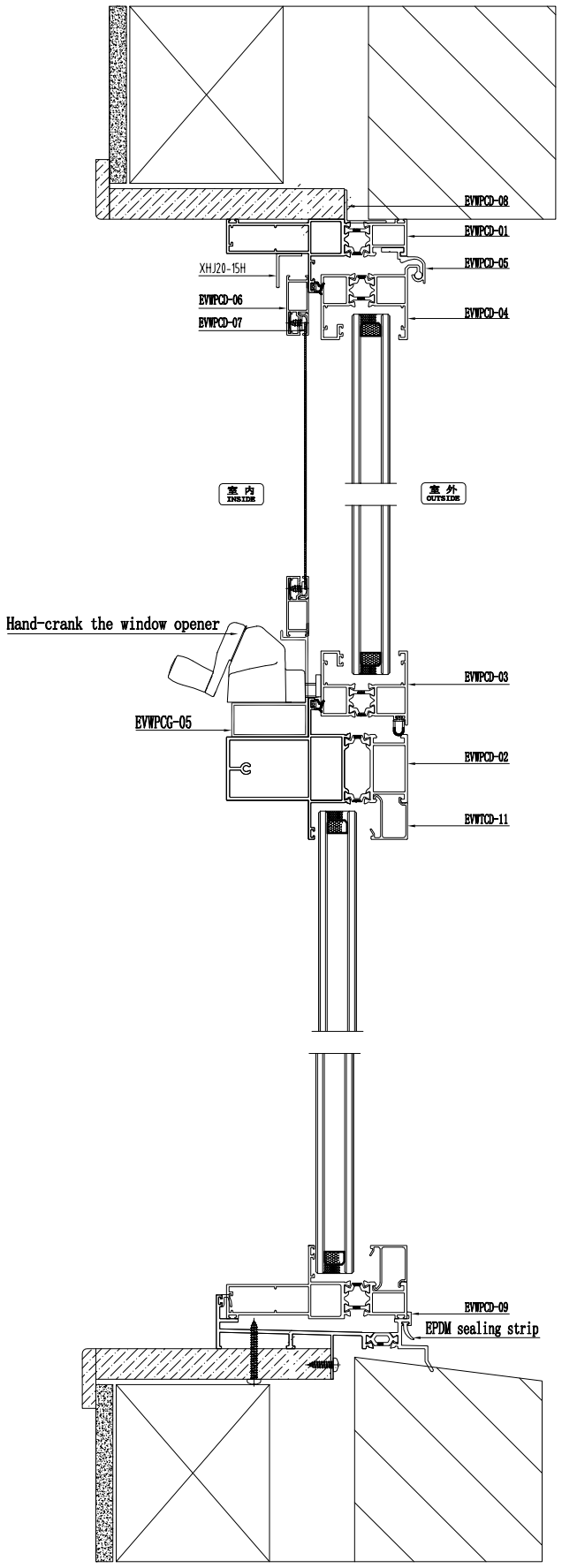

A—A

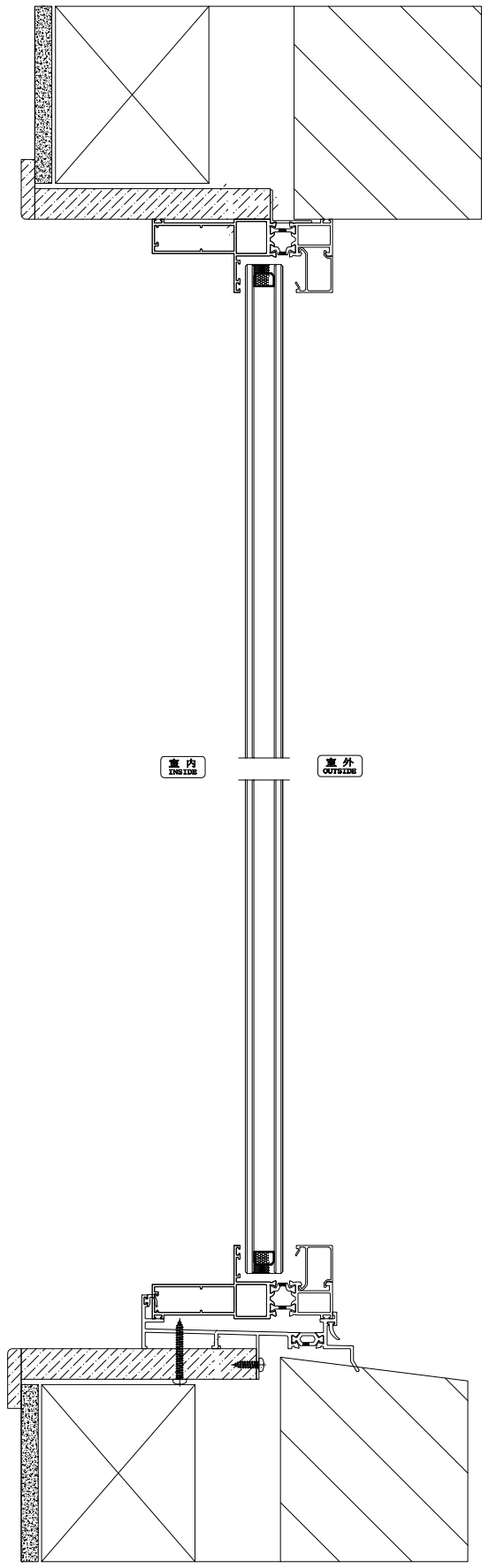

D—D