80 Series Glazed Door

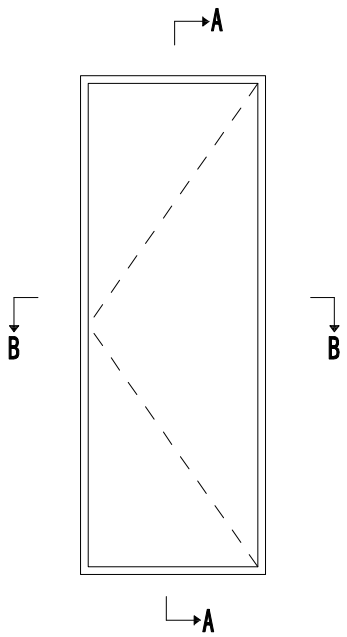

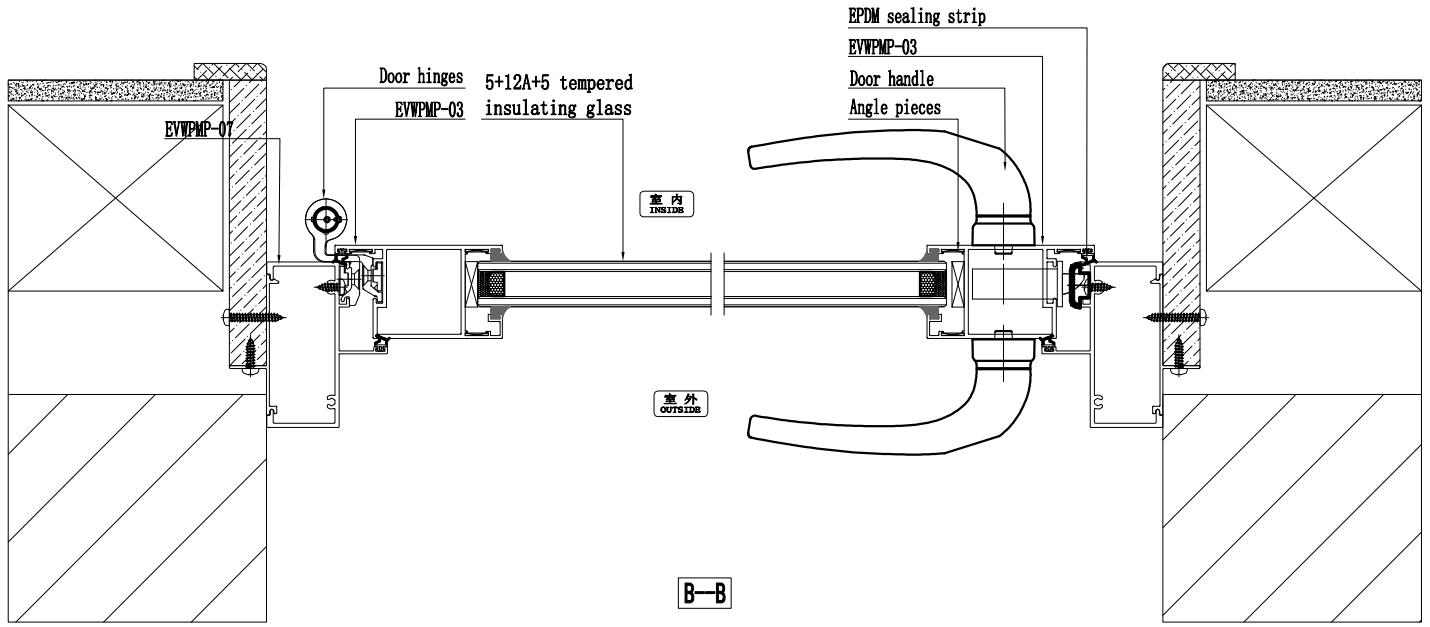

B—B

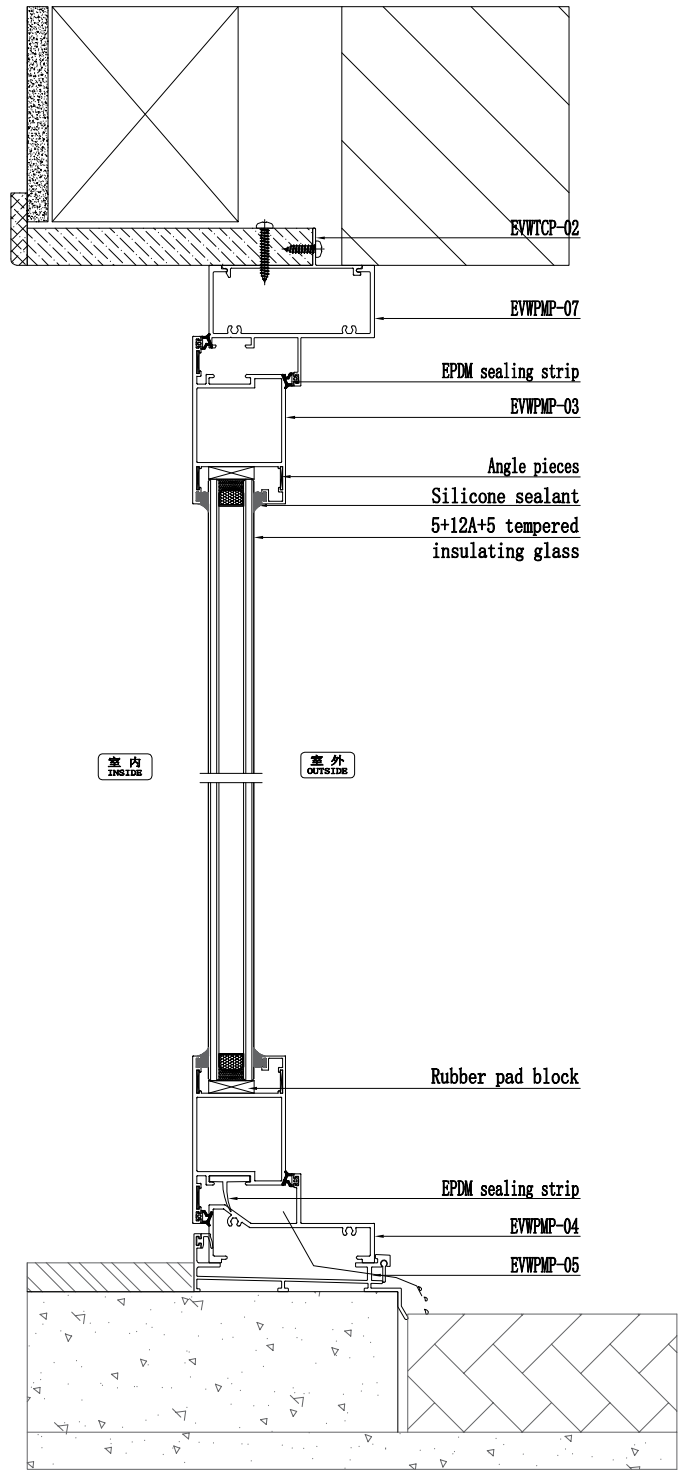

A—A