RevNo	Revision note	Date	Signature	Checked

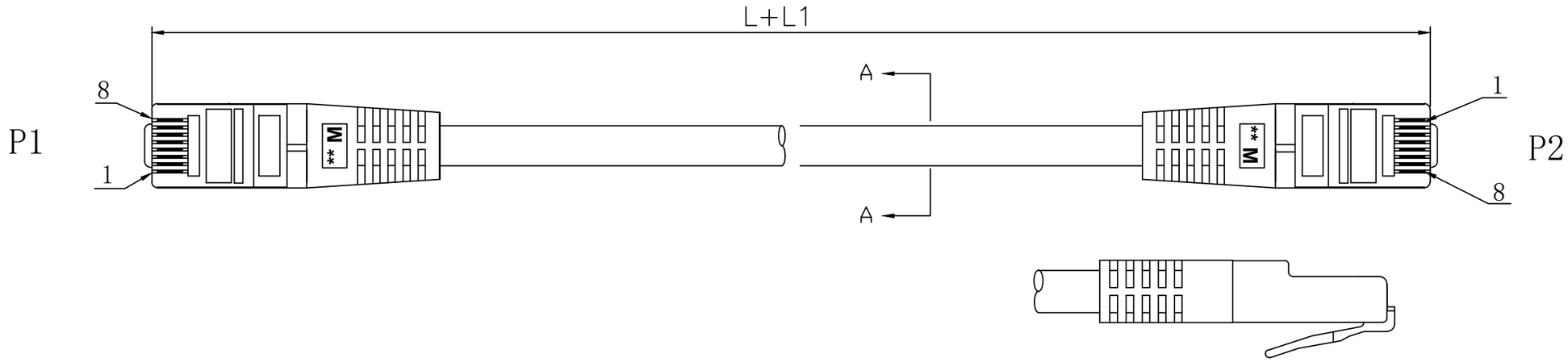

PIN OUT

P1 (568B)		P2 (568B)
W/OG 1		1 W/OG
OG 2		2 OG
W/GN 3		3 W/GN
GN 6		6 GN
W/BU 5		5 W/BU
BU 4		4 BU
W/BN 7		7 W/BN
BN 8		8 BN
SHELL	DRAIN	SH

NOTES:

1:100% short,open and miss wire test.

2:CABLE MARKING:FTP CAT6A 500MHz 4PAIRS STRANDED AWG26 RoHS COMPLIANT

NO.	MATERIAL	DESCRIPTION	QTY.	UNIT
③	OUTER MOLDED	75A PVC	0.048	KG
②	CONNECTOR	8P8C,TRANSPARENT,PIN GOLD PLATED "FU",NICKEL SHELL	2	PCS
①	CABLE	FTP CAT6A,1P(26AWG7/0.15CU)*4C+CROSS+DRAIN+AL,JACKET:PVC,OD:6.0±0.2MM.	L	M

Item Ref	Quantity	Title/Name,designation,material,dimension etc		Article No./Reference	
Designed by ACHY		Checked by NIKE	Approved by - date Mar 15,2024	File name FTP CAT6A	Date Mar 15,2024	Scale FREE
ANGLE:		UPTEC	FTP CAT6A 568B-568B		
UNIT:MM			FTP CAT6A	Edition 1	Sheet 1/1