mm [inch]

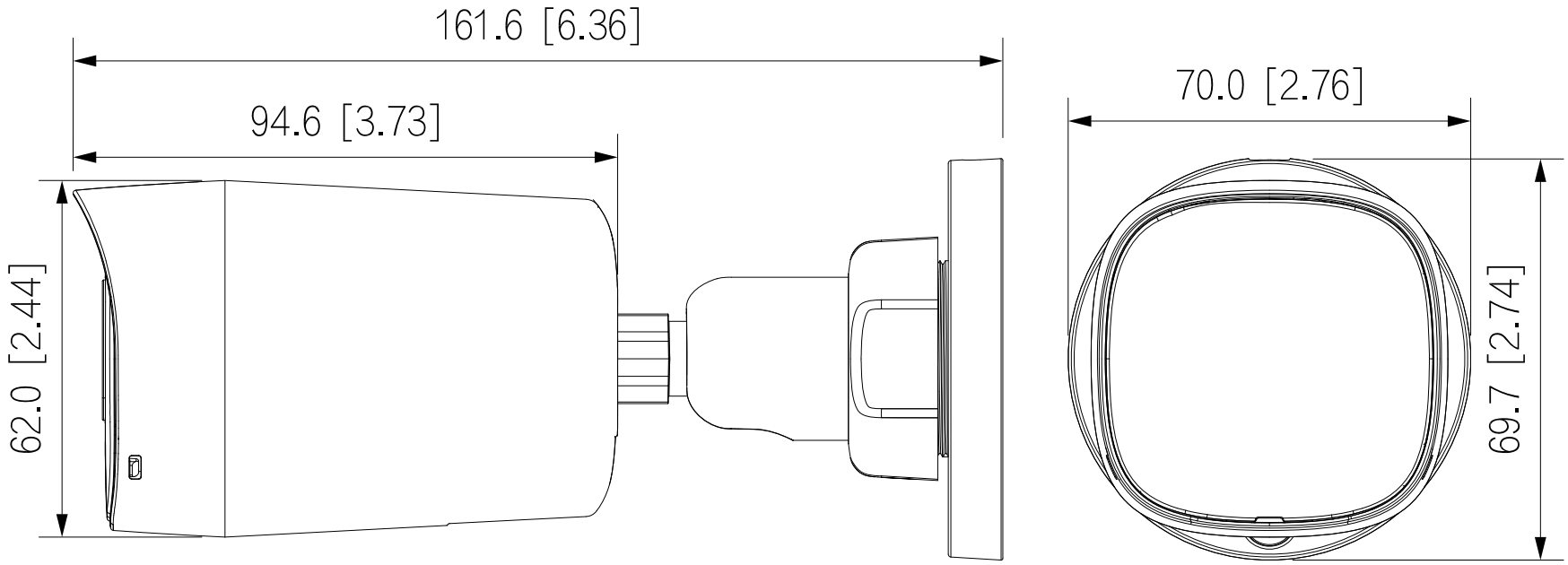
161.6 [6.36]
94.6 [3.73]
62.0 [2.44]
70.0 [2.76]
69.7 [2.74]

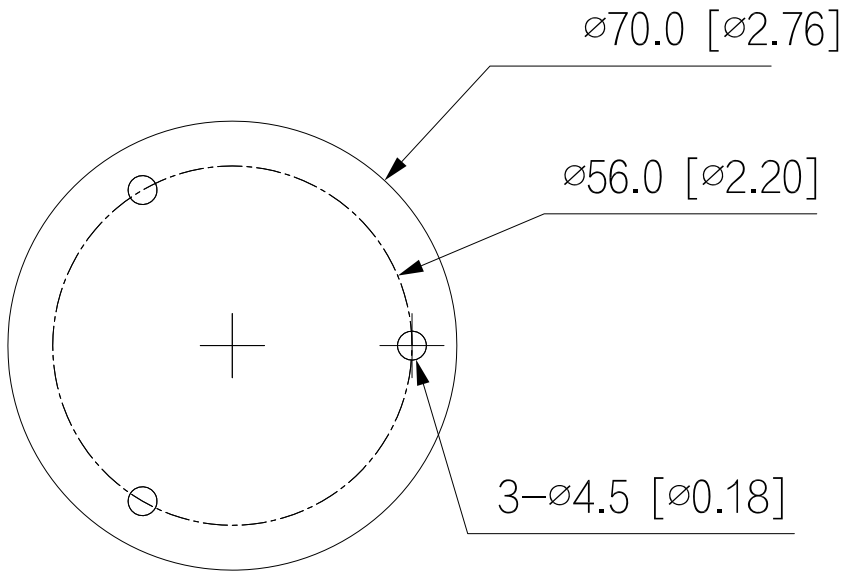
ø70.0 [ø2.76]
ø56.0 [ø2.20]
3–ø4.5 [ø0.18]