Timing Pulley Profiles

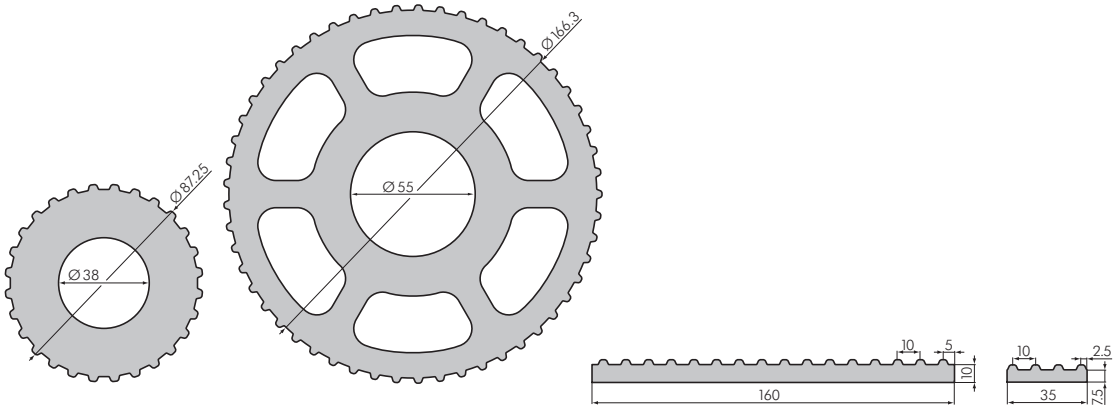

Technical Data	Timing Pulley Profile P 28 AT 10	Timing Pulley Profile 160 P 53 AT 10	Clamp Plate Profile 160 AT 10	Clamp Plate Profile 35 AT 10
I_x [cm4]	237.92	2,296.93	0.93	0.08
I_y [cm4]	237.92	2,296.93	295.41	2.31
W_x [cm3]	54.54	276.24	1.63	0.19
W_y [cm3]	54.54	276.24	36.93	1.32
A [cm2]	43.47	118.09	13.85	2.19
G [kg/m]	11.78	32.00	3.75	0.59
part number	SP0100N	SP0160N	SP0200N	SP0300N
per m charge	SP0101N	SP0161N	SP0201N	SP0301N
cutting charge	SB1003	SB1003	SB1002	SB1001

Profiles 30 midi / Closed Profiles 30 midi

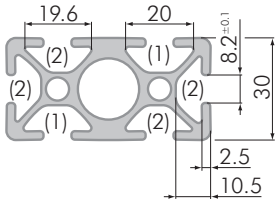

(1) symmetrical t-slot

(2) unsymmetrical t-slot

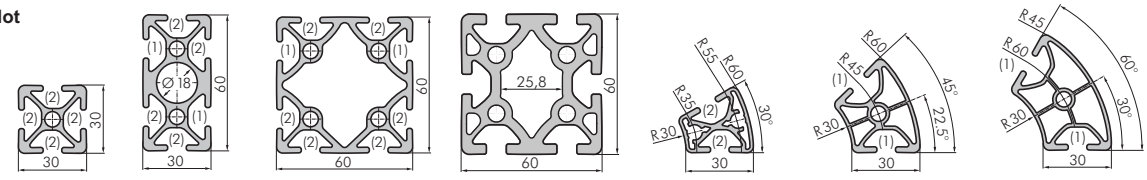

Technical Data	30 x 30 midi	30 x 60 midi	60 x 60 midi	60 x 60 heavy	R 30 / 60 30° midi	R 30 / 60 45° midi	R 30 / 60 60° midi
I_x [cm4]	3,30	21,75	39,78	57,04	1,65	4,76	8,76
I_y [cm4]	3,30	6,58	39,68	57,79	2,48	3,67	5,61
W_x [cm3]	2,20	7,25	13,26	19,01	0,97	1,98	3,08
W_y [cm3]	2,20	4,39	13,23	19,26	1,40	1,89	2,52
A [cm2]	3,33	6,61	9,58	15,92	2,71	3,67	4,16
G [kg/m]	0,90	1,79	2,60	4,29	0,74	0,99	1,13
part number	SP1500N	SP1590N	SP1620N	SP1720N	SP1660N	SP1670N	SP1680N
per m charge	SP1501N	SP1591N	SP1621N	SP1721N	SP1661N	SP1671N	SP1681N
cutting charge	SB1001	SB1001	SB1001	SB1001	SB1001	SB1001	SB1001