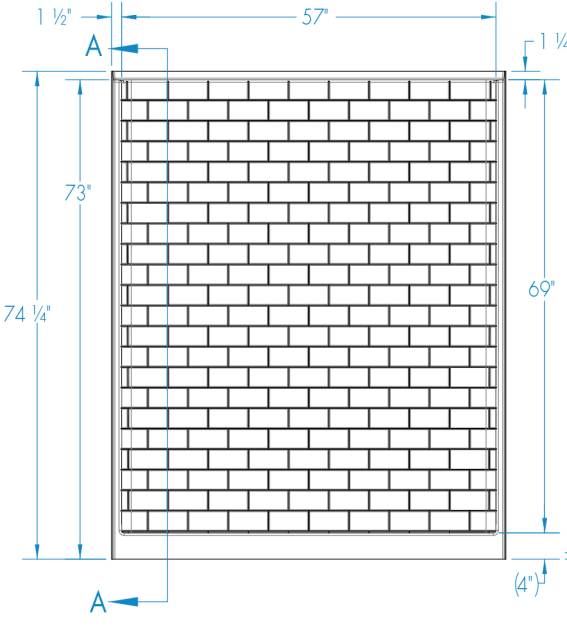

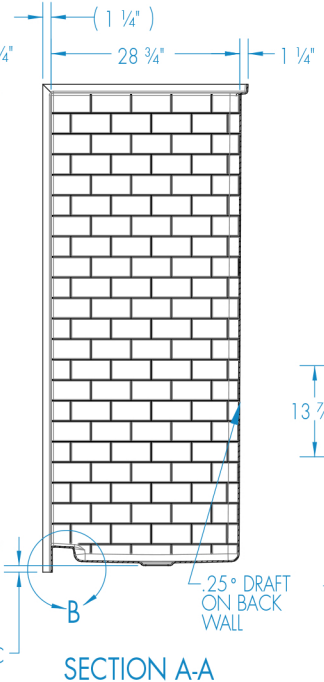

SECTION A-A

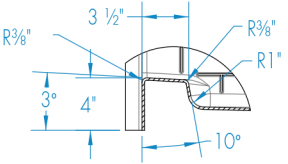
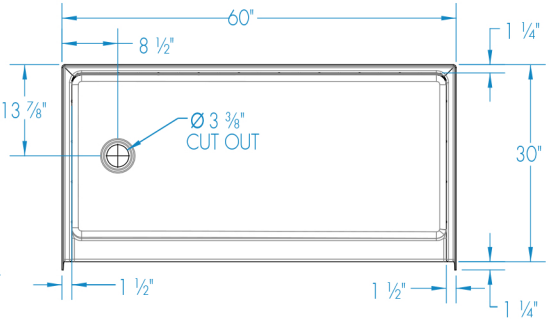
DETAIL B