CLEVELAND CFG FAUCET GROUP™

A Moen Incorporated Brand

SPECIFICATION SHEET

Capstone®

Two Handle High-Arc Kitchen Faucet

Model: CA41613 series with side spray

Model: CA41611 series less side spray

DESCRIPTION
- Metal construction with various finishes identified by suffix
- Includes hose and spray
- Hose reach 36", hose length 48"
- 1/2" IPS connections
- Six (6) individual boxes per master carton
- Side spray finishes matches faucet finishes

OPERATION
- Lever-style handles
- Hot side: Turn counterclockwise to open (clockwise to close)
- Cold side: Turn clockwise to open (counterclockwise to close)
- Will operate with less than 5 lbs. of torque
- No grasping motion required to operate the faucet handles

FLOW
- Aerator limited to 1.5 gpm (5.7 L/min)

CARTRIDGE
- Ceramic disc technology
- Non-metallic, non-ferrous, and brass material
- Single body construction for easy replacement

STANDARDS
- Third party certified to IAPMO Green ASME A112.18.1/CSA B-125.1 and all applicable requirements referenced therein including NSF 61/9
- Meets CalGreen and Georgia SB370 requirements
- Contains no more than 0.25% weighted average lead content
- Complies with California Proposition 65 and with the Federal Safe Drinking Water Act
- **ADA** for lever handles
- Features red/blue hot/cold temperature indicators

WARRANTY – RESIDENTIAL, COMMERCIAL
- Ten year limited warranty against defects in materials and manufacturing workmanship
- Refer to the installation instructions enclosed with each CFG product or call 1-888-450-4910 for complete warranty information

10 YEAR NSF UPC GREEN UPC

CRITICAL DIMENSIONS
- This faucet designed to be installed through 4 holes, 1-1/4" minimum diameter, 8" centers
- Maximum deck thickness 1-1/8" (28.6mm)

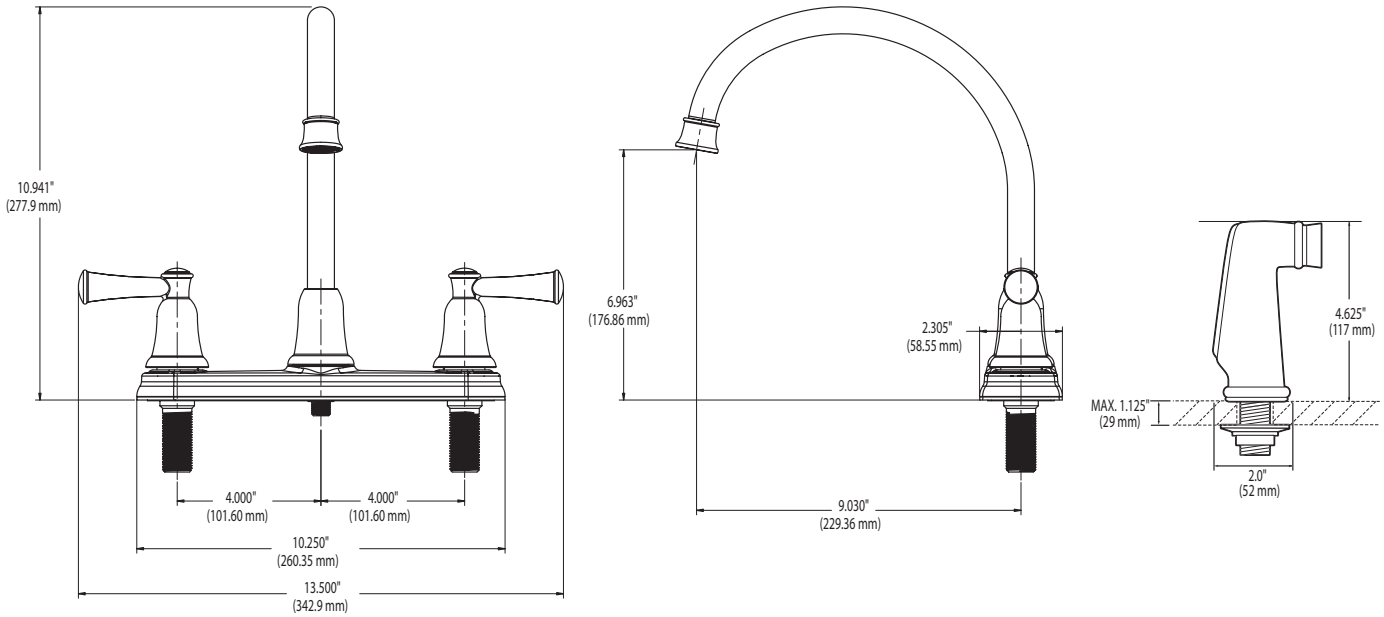

CRITICAL DIMENSIONS

(DO NOT SCALE)