Lindor™ Technical Specification

18" & 24" Towel Bar MY8718, MY8724

Stock Numbers:

- ☐ **MY3518CH – Towel Bar**
  Chrome
- ☐ **MY3518BN – Towel Bar**
  Brushed Nickel
- ☐ **MY3518BL – Towel Bar**
  Matte Black
- ☐ **MY3524CH – Towel Bar**
  Chrome
- ☐ **MY3524BN – Towel Bar**
  Brushed Nickel
- ☐ **MY3524BL – Towel Bar**
  Matte Black

Materials:

Towel Bar Posts are constructed of zinc.
Bar is constructed of brass.

Dimensions:

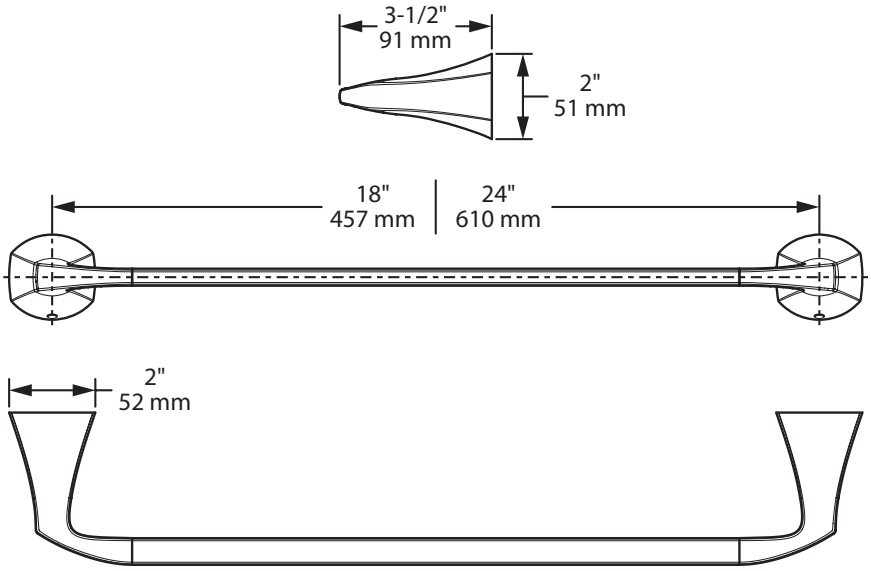

Installation Instructions:

• Please refer to production instruction sheets for installation steps.

Cleaning Instructions:

To preserve the fine finish of this product, clean only with a soft damp cloth. Dry well. Do not use commercial or abrasive cleaners.

Stock Number:_____ Towel Bar
By Moen Incorporated

MOEN®

25300 AL MOEN DRIVE • NORTH OLMSTED, OH 44070
CORPORATE HEADQUARTERS: (800) 321-8809 • FAX: (800) 848-6636
INTERNATIONAL: (440) 962-2000 • FAX: (440) 962-2726
CUSTOMER SERVICE (USA): 800-882-0116 • FAX: (888) 379-2720
WWW.MOEN.COM
© 2020 Moen Incorporated. Moen is a registered trademark and Lindor is a trademark of Moen Incorporated. All rights reserved.

06/17/2020 SPC154A 5000037305
Rev.Date:04/10