Belfield™ Accessories Technical Specification

Double Towel Bar YB6422

Stock Numbers:

- **YB6422CH – Double Towel Bar**
  Chrome
- **YB6422BN – Double Towel Bar**
  Brushed Nickel
- **YB6422ORB – Double Towel Bar**
  Oil Rubbed Bronze
- **YB6422NL – Double Towel Bar**
  Polished Nickel
- **YB6422BL – Double Towel Bar**
  Matte Black

Dimensions:

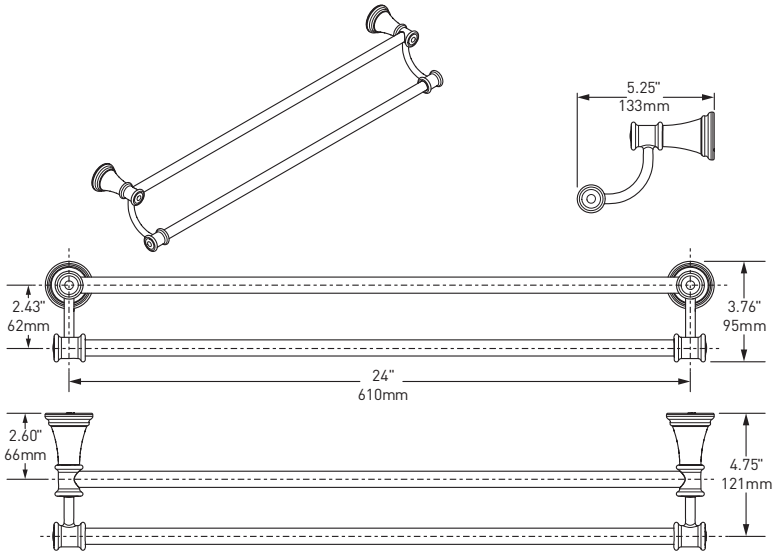

Materials:

Towel Bar posts are constructed of zinc. **Bars** are aluminum.

Installation Instructions:

Please refer to product instructions for installation steps.

Cleaning Instructions:

To preserve the fine finish of this product, clean only with a soft damp cloth. Dry well. Do not use commercial or abrasive cleaners.

Stock Number: _____ Double Towel Bar
By Moen Incorporated

25300 AL MOEN DRIVE • NORTH OLMSTED, OH 44070
CORPORATE HEADQUARTERS: (800) 321-8809 • FAX: (800) 848-6636
INTERNATIONAL: (440) 962-2000 • FAX: (440) 962-2726
CUSTOMER SERVICE (USA): 800-882-0116 • FAX: (888) 379-2720
WWW.MOEN.COM

© 2023 Moen Incorporated. Moen is a registered trademark and Belfield is a trademark of Moen Incorporated. All rights reserved.

MOEN®

06/26/2023 SPC5234 500005766G2
Released 01