# MOEN®

# Specifications

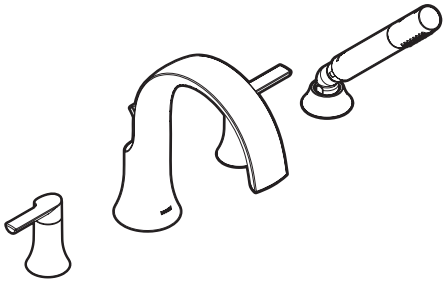

## DOUX™
## Two-Handle Roman Tub Faucet Trim w/Built In Diverter Valve

**Models:** TS984 series

**Valves:** 9792, 9793

WaterSense Meets EPA Criteria
Certified by IAPMO R&T

**DESCRIPTION**
- Metal construction with various finishes identified by suffix
- Single function handshower with double check valves

**OPERATION**
- Lever style handles
- Rotate hot side handle counterclockwise to open (clockwise to close)
- Rotate cold side handle clockwise to open (counterclockwise to close)

**FLOW**
- Hand shower meets 1.75 gpm max (6.6 L//min) @ 80 psi

**STANDARDS**
- Third party certified to ASME A112.18.1/CSA B-125.1, and all applicable requirements referenced therein
- **ADA** for lever handles

**WARRANTY**
- Lifetime limited warranty against leaks, drips and finish defects to the original homeowner
- 10 year limited warranty when used in a multifamily installation
- 5 year limited warranty when used in a commercial installation

Visit www.moen.com/support for complete details and limitations

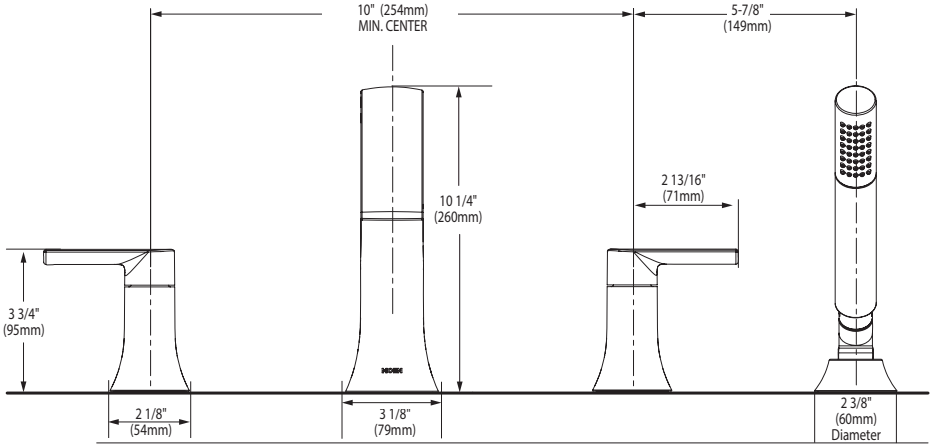


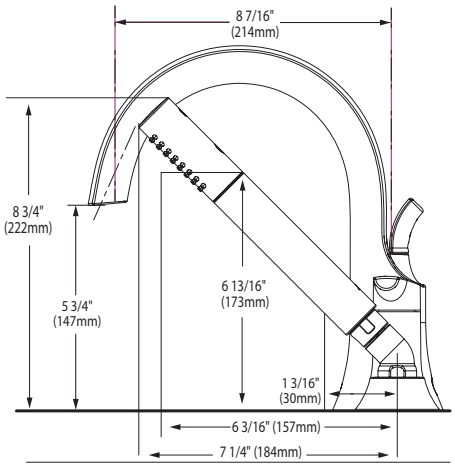


M•pact System

## CRITICAL DIMENSIONS

(DO NOT SCALE)



**FOR MORE INFORMATION CALL: 1-800-BUY-MOEN**
**www.moen.com**

06/17/2018 SPC15566 S000035984 Released 01