ROHL

Authentic Luxury for Kitchen and Bath®

www.rohlhome.com

1983 PULL-DOWN KITCHEN FAUCET

ROHL Italian Kitchen

R7514LM (Metal Lever)

FEATURES

- Fashonable traditional design
- Metal lever
- Brass construction
- Dissimilar ceramic discs for smooth operation and long life
- Quick fitting system for hose connection
- 1 3/8” hole cutout
- 2” max. installation depth on deck
- IAPMO compliant double check valve
- Requires 2 1/2” clearance from backsplash to center of faucet hole
- 1.8 GPM
- Dual spray with easy push button
- Ergonomic swivel handspray connection for ease of use
- Nylon braided hose with ball joint end for all directions

COLORS/FINISHES

- Polished Chrome
- Polished Nickel
- Satin Nickel
- Stainless Steel
- Matte Black*
- Rose Gold*

WARRANTY
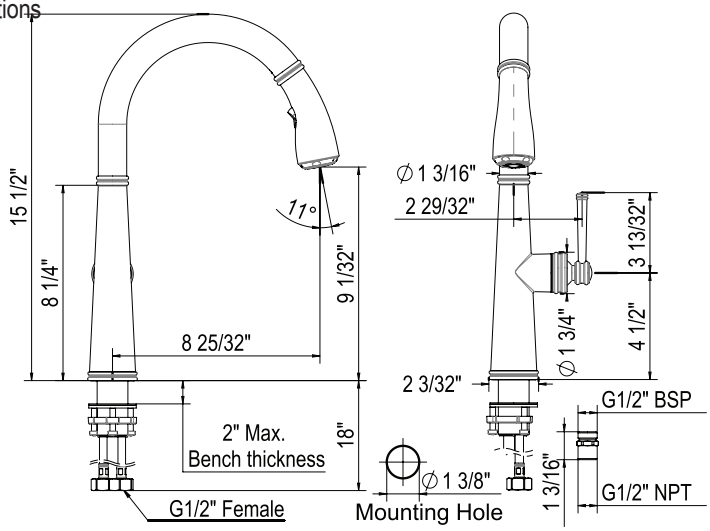
• Limited Lifetime
(*) 5-Year Limited Warranty
(**) No Warranty