ETF-700-4-BOX-BDT-CP-2.2GPM-LAM-IR-FCT

CODE NUMBER

3365279BT

DESCRIPTION

4" Trim Plate, Box Transformer Power Supply, Below Deck Thermostatic Mixing Valve, Polished Chrome Finish, 2.2 gpm, Laminar Spray, Infrared Sensor, Optima® Hardwired-Powered Deck-Mounted Gooseneck Body.

DETAILS

- Flow Rate: 2.2 gpm (8.3 Lpm) (2.2GPM)
- Spray Type: Laminar (LAM)
- Sensor Type: Infrared (IR)
- Mounting Type: Single Hole
- Trim Plate: 4" (102mm) (4)
- Power Supply: Box Transformer (BOX)
- Temperature Mixer: Below Deck Thermostatic Mixing Valve (BDT)
- Finish: Polished Chrome (CP)
- Factory Default Timeout: 30 seconds
- Factory Default Gallons per Cycle: 1.1

FEATURES

ADA Compliant, Water Usage and Battery Strength Reporting, Wireless Settings Adjustment, Commercial Grade Faucet, Integrated Water Shut-off, Hygienic Line Flush, On-demand or Metered Activation, Self-adapting Sensor, Cast Brass Spout, Quick Connect Fittings

ELECTRICAL SPECIFICATIONS

- Battery Life: 3 years 8,000 cycles/month
  - Optional power harvesting significantly extends service life
- Sensor Range: 8"–10" (203–254mm)
- Timeout Adjustment Settings: 30s

POWER SUPPLY OPTIONS

- 6VDC Plug Adapter (included with PLG models), 0362006
- 6VDC Ganged Adapter Kit (up to 6 units)(sold separately), 0362035*
- 24VAC Box Transformer (included with BOX models), 0345370PK

* when converting units to hardwired with battery back-up

VIDEOS

- Sloan Connect App®
- Sloan Optima Below Deck Faucet

DOWNLOADS

- Optima Smart Faucet Below Deck Installation Instructions
- Trim Plate Guide
- Faucet Spray Heads Repair and Maintenance Guide
- ETF-700/700-S and EBF-750/750-S Below Deck Repair and Maintenance Guide
- Additional Downloads

Variation not shown: 4" Trim Plate

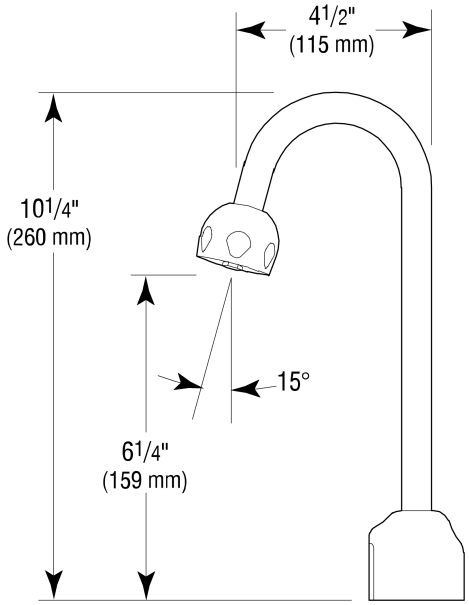

COMPLIANCES & CERTIFICATIONS

(ADA Compliant, ASME A112.18.1 Compliant, ASSE 1070, cUPC Certified, UL Certified, UPC Certified, UPC Low Lead Compliant, cUPC Low Lead Compliant, EPD, HPD, Proposition 65, TAS, WELL Building Standard)

RECOMMENDED SPECIFICATION

Faucet shall include cast brass body, quick-connect fittings, twist-off/shut-off solenoid assembly, removable battery cartridge, flexible power supply and allow adjustment of settings wirelessly via Apple or Android smartphones.

Sloan 10500 Seymour Ave, Franklin Park, IL 60131
Phone: 800.982.5839 • Fax: 800.447.8329 • sloan.com

NOTES

All information contained within this document subject to change without notice.

Looking for other variations of the ETF-700 product? View the general spec sheet with all options.

Find a matching soap dispenser for this faucet.
Find a compatible sink for this faucet.

WARRANTY

View Warranty Information

ROUGH-IN

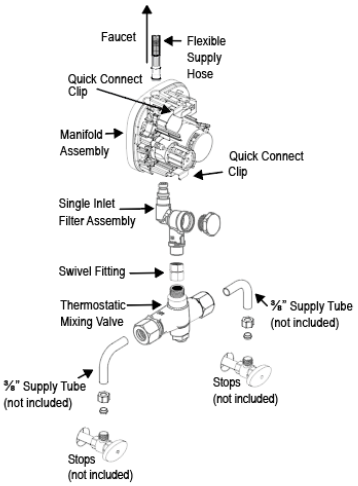

SINGLE INLET FILTER FITTING KIT WITH BELOW DECK THERMOSTATIC MIXING VALVE (BDT)

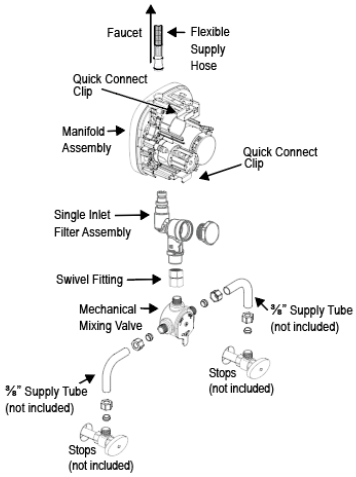

SINGLE INLET FILTER FITTING KIT WITH BELOW DECK MANUAL MIXING VALVE (BDM)

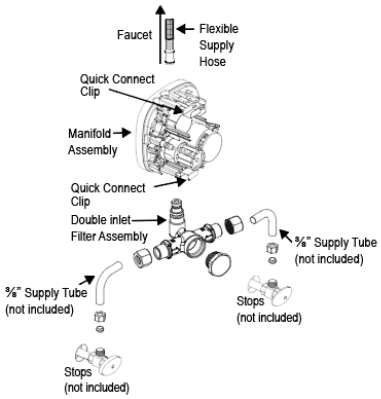

DOUBLE INLET FILTER FITTING

Sloan 10500 Seymour Ave, Franklin Park, IL 60131
Phone: 800.982.5839 • Fax: 800.447.8329 • sloan.com