Export to PDF Email this as a PDF

endura GREASE MANAGEMENT

Submittal Sheet

Part Description:

3" PVC Gray Endura 50 GPM 100lbs Grease Interceptor, Flow Control Device Spigot X Spigot X Spigot

Part Number:

3950A03S

Approvals and Listings maintained by:
Canplas Industries Ltd
Canada: 1-800-461-5300 USA: 1-888-461-5307

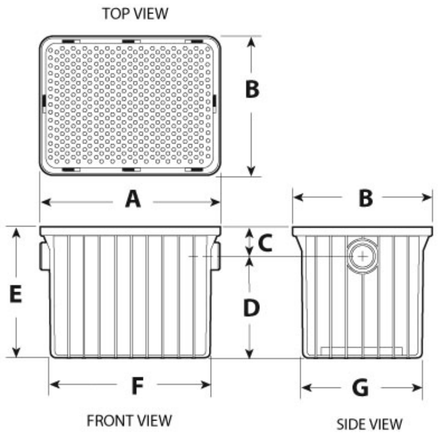

Part #	Part UPC	Colour	Size (inches)	Ctn Qty	Ctn Bar Code	Ctn. Wt (Kgs)	Ctn. Wt (lbs)	Skid Cubic (m)	Skid Cubic (ft)	Ctns/Skid
3950A03S	662671390684	GREY	3X3	1	10662671390681	29.85	65.67	1.63	57.50	4

Dimensions (inches)

A	B	C	D	E	F
31	23.5	5.205	18.295	23.5	28.75