CABINET UNIT HEATERS
STEAM / HOT WATER

MODEL C

MODEL CW

11-160.11 • MARCH 2023

Table of Contents

Page

Model Identification 3
Design Benefits
Features and Benefits 4
Factory Mounted Options 5
Field Installed Accessories 6
Performance Data
Hot Water Sample Sizing Calculations 7
Hot Water Correction Factors 8-9
Hot Water Performance Data (Single Row Coil) 10
Hot Water Performance Data (Two Row Coil) 11
Hot Water Performance Data (Three Row Coil) 12
Hot Water Performance Data (Four Row Coil) 13
Steam Sample Sizing Calculations 14
Steam Correction Factors 15
Steam Performance Data 16
Mounting Height Correction Factors 17
Model Dimensional / Motor Data
Model C - Floor Mounted Units 18
Model CW - Wall Mounted Units 19
Coil Connection Dimensions 3 & 4 Row 20
Duct Collar Dimensional Data 21
Specifications
Unit Data Specifications 22
Unit Mechanical Specifications 22

BREEZE™ AccuSpec

The Modine Breeze® AccuSpec is the fastest way to generate performance data based on actual job conditions. The Breeze® AccuSpec program is a web-based sizing and selection program. The program provides a series of step-by-step questions that allow for the easy configuration of Modine products. After a model has been configured, the program can generate Submittal Schedules, Submittal Data (including performance and dimensional drawings), and Specifications.

Figure 2.1 - Model Nomenclature

1,2,3	4,5,6	7	8	9	10	11	12	13	14	15	16	17	18
MT	CFM	ADO	ADT	DS	IS	OS	AS	CR	HM	PF	MT	LB	OA

1,2 - Model Type (MT)
C - Pedestal Style
CW - Exposed, Recessed, or Ceiling Unit

4,5,6 - Nominal Air Flow (CFM)
002 - 250 CFM
003 - 330 CFM
004 - 450 CFM
006 - 620 CFM
008 - 840 CFM
010 - 1050 CFM
012 - 1240 CFM
014 - 1430 CFM

7 - Arrangement Digit One (ADO)
0 - Wall or Floor
5 - Ceiling
9 - Inverted

8 - Arrangement Digit Two (ADT)
0 - Bottom In, Top Out
6 - Front In, Top Out
7 - Bottom In, Front Out
8 - Front In, Front Out

9 - Development Sequence (DS)
A - Current

10 - Inlet Style (IS)
L - Louvers
B - Bar Grille
D - Duct Collar

11 - Outlet Style (OS)
L - Louvers
B - Bar Grille
D - Duct Collar
A - Adjustable Louvers

12 - Access Side (AS)
L - Left
R - Right

13 - Coil Rows (CR)
1 - 1 Row Coil
2 - 2 Row Coil
3 - 3 Row Coil
4 - 4 Row Coil

14 - Access Doors (AD)
1 - None
2 - Top
3 - Front Panel
4 - Top with Key Locks
5 - Front Panel with Key Locks

15 - Panel Fasteners (PF)
0 - None
1 - Spanner Head
2 - Key Locks

16 - Motor Type (MT)
P - Standard PSC
H - High Static PSC
F - Standard PSC with Plug-In Leads
I - High Static PSC with Plug-In Leads
E - Standard EC
K - High Static EC

17 - Leveling Bolts (LB)
0 - None
1 - Leveling Bolts

18 - Outside Air (OA)
0 - None
1 - 25% OA Duct Collar
2 - 100% OA Duct Collar
5 - 100% OA Motorized Damper
6 - 25% OA Motorized Damper

Intertek

As Modine Manufacturing Company has a continuous product improvement program, it reserves the right to change design and specifications without notice.

Figure 3.1
Model C - Floor Mounted Unit

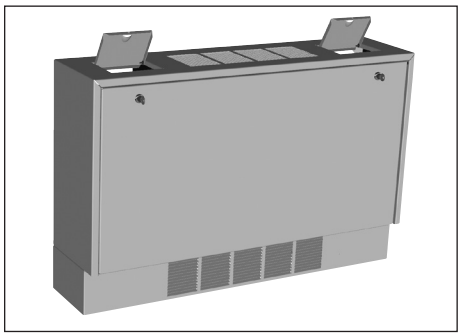

Figure 3.2
Model CW - Wall or Ceiling Mounted Unit

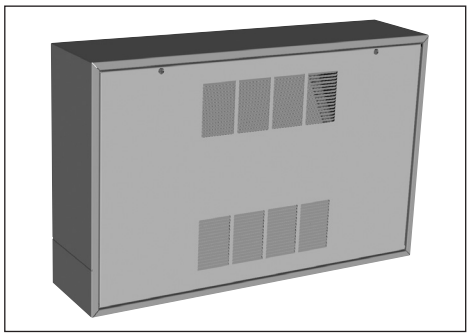

Figure 3.3
Model CW - Recessed (full or partial) Wall or Ceiling Mounted Unit

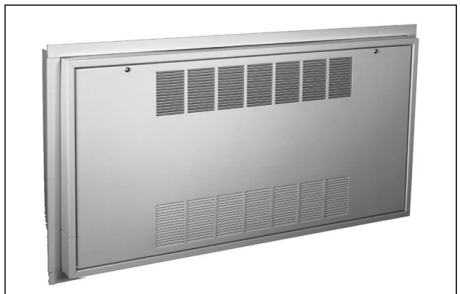

Shown with optional Perma-Lap® Frame

Figure 3.4 - Standard Air Flow Options

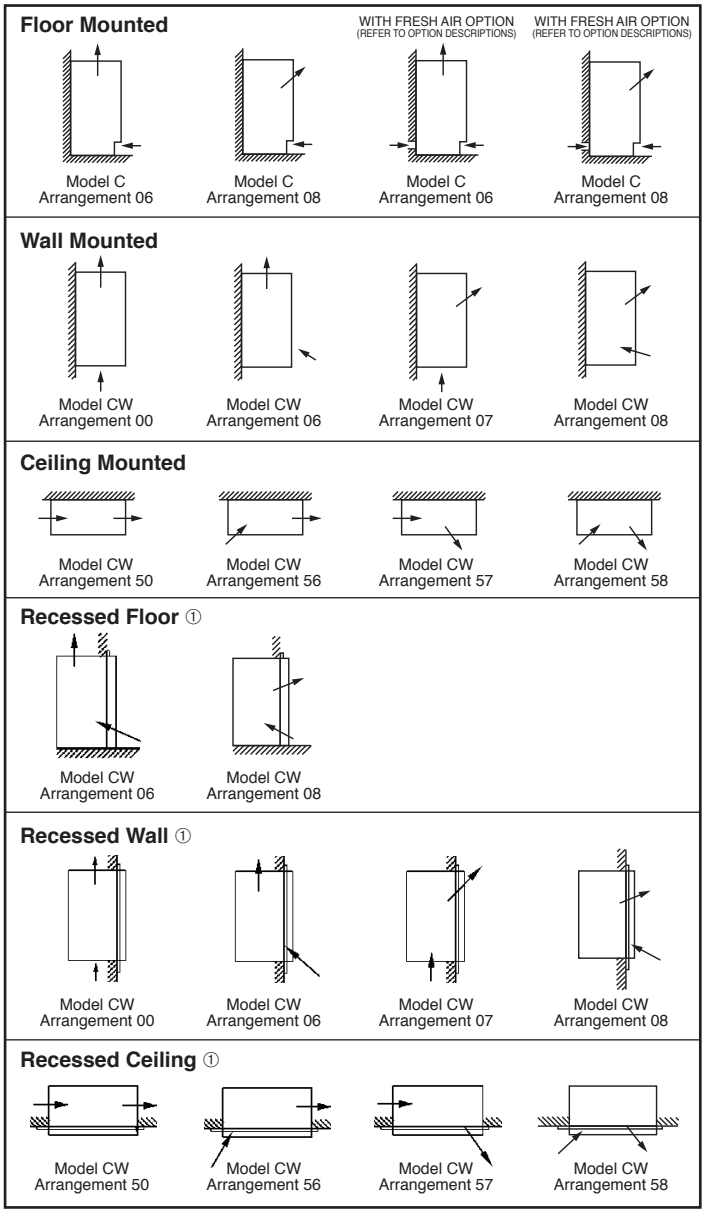

Figure 3.5 - Inverted Air Flow Options

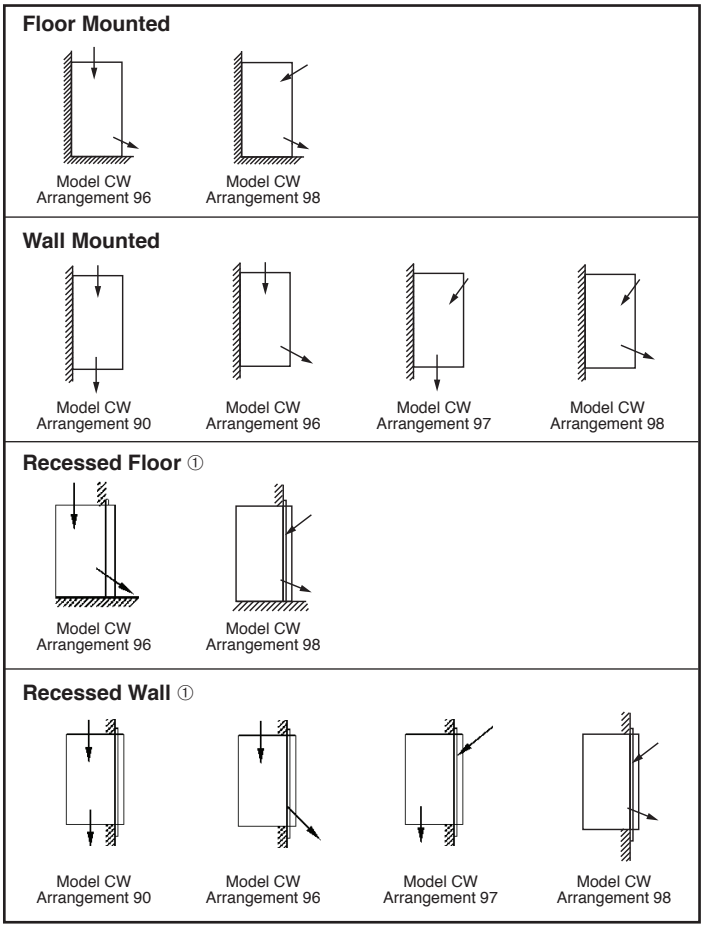

①Perma-Lap® frame available for recessed units.

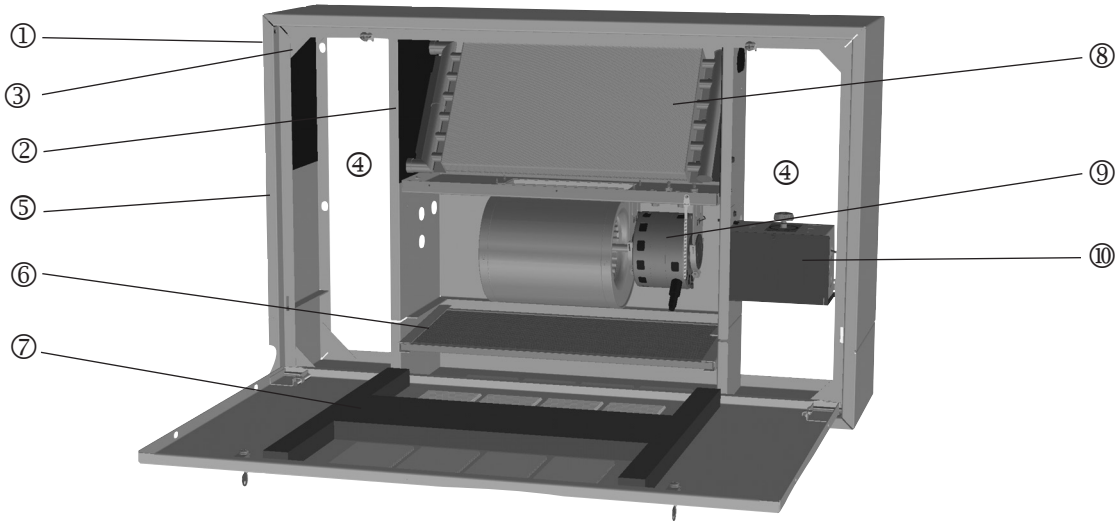

① **One-Piece Cabinet Top and Sides (STD)**
Cabinet top and sides are formed from a single sheet of 18 gauge steel reducing the number of parting lines common to multi-piece construction. Fronts are 16 gauge. All louvers are stamped as standard.

② **Wrap-Around Partitions and Back Sheet (STD)**
Inner partition panels and back sheet are die-formed from a single sheet of 18 gauge steel. This assures precision fit and alignment of all internal components and maximum cabinet rigidity.

③ **All-Welded Construction (STD)**
Cabinet unit heaters utilize five to eight structural components in the basic cabinet. The components are fixture-aligned and welded.

④ **Cabinet End Pockets (STD)**
The two cabinet end pockets provide ample space for convenient installation of piping and electrical wiring. Easy access reduces costs and installation time.

⑤ **Cabinet Finish (STD)**
After assembly and welding operations are completed, the entire cabinet unit is treated for prevention of rust and corrosion. Entire cabinet is finished with a hammertone beige color, durable polyester powder-coat paint.

⑥ **Quick-Change Permanent Filters (STD)**
Filters are removable without tools. After opening the unit's front panel, the filter easily slides out. Cleanable filters are provided as standard.

⑦ **Insulation (STD)**
Sound dampening insulation on all front panels.

⑧ **Coils – Steam/Hot Water (STD)**
All coils used in cabinet heaters use copper tube, aluminum fin construction with sweat connections. Tubes are mechanically expanded into integral fin collars. Return bends and joints are silver alloy brazed and the coil is pressure-tested to 200 psi pressure. Field reversible coils allow piping to be made for left or right side connection, with left hand piping as factory standard.

⑨ **Power Assembly (STD)**
Blower platform, blower, and blower motor on all sizes are removable as a single unit. A direct drive, multi-speed, PSC motor with built in thermal overload protection powers the forward curved aluminum blower wheels. Right hand electrical as factory standard.

⑩ **Speed Control (STD)**
Solid state infinite speed control with off position.

Access Doors (not shown) (STD)
⑪ Tilt type access doors standard on model C units.

Unit Equipment Options

Piping Options
- 2, 3 & 4 Row High Capacity Coil, for use with water only. See page 11 for performance data.
- Right Hand Piping, Left Hand Electrical.

Electrical Options
- Standard EC motor is offered with 3 speed switch to reduce electrical consumption over PSC motor.
- High Static PSC Motor used to overcome up to 0.4"W.C. High Static EC motor used to overcome up to 0.25"W.C. external static pressure.
- Plug-In Motor. Allows removal of motor(s) or fan board without unwiring unit.
- Disconnect Switch. On-Off DPST toggle switch to disconnect electric power (hot and neutral lines) to unit. Located in electrical end compartment. See Figure 6.3.
- Unit Mounted Return Air Thermostat. Temperature sensing bulb is located in return air stream. Temperature set point range 55° to 90°F. Not for use with inverted air flow arrangements. Normally used with a control valve (see Accessories). See Figure 6.3.

Access Door Options
- Access Doors for Model CW. Two doors per unit.
- Front Panel Tamper Proof Fasteners with Tool.
- Key Locks on Access Doors. Two locks per unit. Especially valuable for units located in public place, these key locks make unit controls tamperproof.
- Key Locks on Front Panel. Two locks per unit. Especially valuable for units located in public place, these key locks make unit controls tamperproof.

Figure 5.1 - Tamper Proof Screws, Key Lock

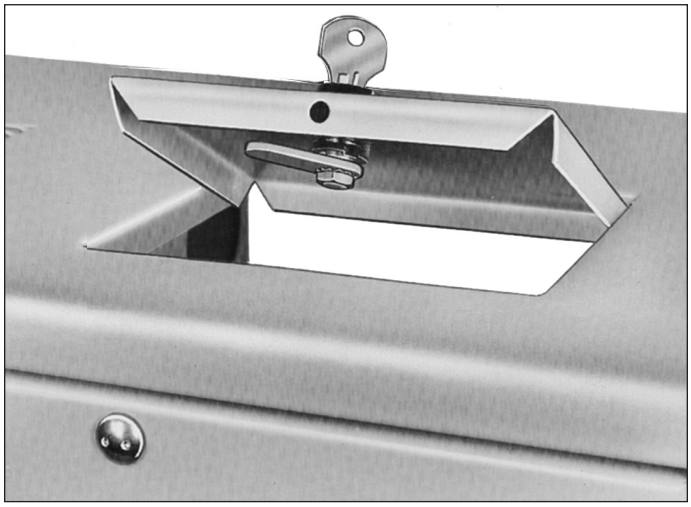

Air Inlet Options
- Aluminum Bar Grille. Grille replaces louvers. 12 gauge extruded aluminum.
- Model CW – 100% Air Inlet Duct Collar. Collar width is 1" and is located at the bottom inlet, except on Arrangement 9 (inverted) where it is located at the top inlet.
- Model C – 25% Outside Air Inlet Duct Collar. Collar width is 1" and is located at the rear inlet.
- Model C – 100% Outside Air Inlet Duct Collar. Collar width is 1" and is located at the rear inlet.
- Model C – 100% Outside/Inside Air Motorized Damper. Allows outside or inside air using 115V electric stall motor and outside/inside changeover switch.
- Model C – 25% Outside Air/100% Inside Air Motorized Damper. Allows 25% outside air or 100% inside air using 115V electric stall motor and outside/inside changeover switch.

Air Outlet Options
- Aluminum Bar Grille. Grille replaces louvers.
- Two Way Adjustable Air Deflector Louvers. Cannot be ordered with Multi Row High Capacity Coil.
- 100% Air Outlet Duct Collar. Collar width is 1” and is located at top outlet or bottom outlet on inverted models. Model CW only.

Miscellaneous Options
- Decorator Color, optional paint color from color chart 75-403, latest revision.
- Leveling Bolts, allows leveling of unit on uneven floors. (Model C only)

Figure 5.2 - Two-Way Adjustable Louvers

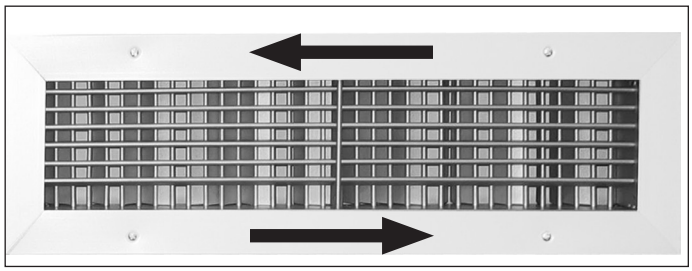

Figure 5.3 - Leveling Bolts

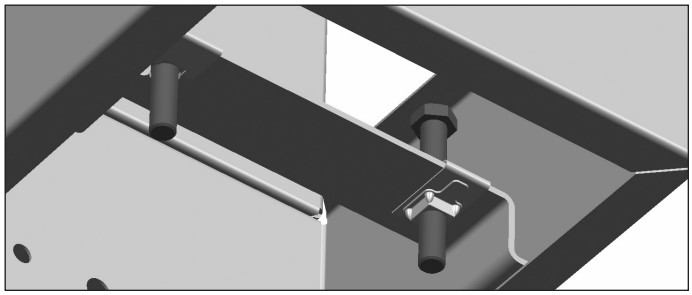

Manual Starter

Toggle switch starter with thermal overload and off position. If overload trips, starter must be reset by turning switch to off, then back to on position.

Two and Three Way Electric Valves

Installs to unit supply piping in piping end compartment. Opens and closes in conjunction with starting and stopping of blower motor(s) on thermostat demand, 115 volt, brass body. Model sizes 002 thru 006 use 3/4" NPT, sizes 008 thru 014 use 1" NPT. Can be used with unit mounted return air thermostat or wall thermostat. Select wall thermostat from accessory list. System pressure not to exceed 15 psi. Three-way valve adds bypass of water or steam.

Modulating Non-electric Valve

Installs to unit supply piping in piping end compartment. Modulates hot water or steam flow in response to return air temperature, integral set point adjustment with remote sensing bulb located in return air stream. Responds to small changes in temperature. Requires constant blower operation. Modulating control reduces energy consumption and eliminates overheating. Temperature control range 48°-83°F. Straight through style valve, brass body. Unit sizes 002 thru 006 use 3/4" NPT, sizes 008 thru 014 use 1" NPT. System pressure not to exceed 15 psi.

Figure 6.1 - Perma-Lap® Frames

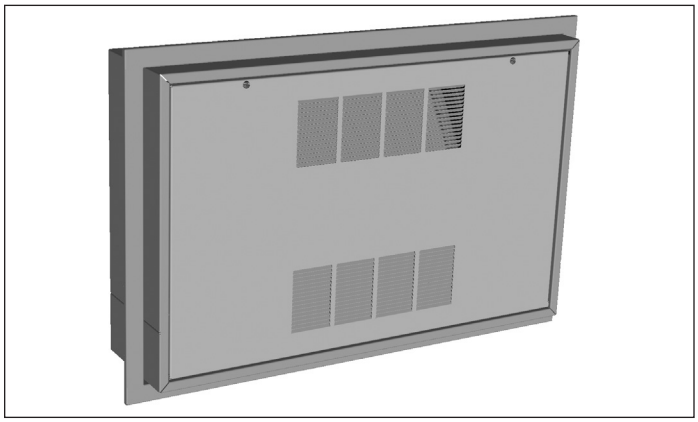

Figure 6.2 - Two Way Electric Valve

Perma-Lap® Frames

The Perma-Lap® frame is a field installed accessory that can be used to recess model CW cabinet unit heaters. Units can be fully or partially recessed. The unit is framed in the recess providing permanent contact with any wall or ceiling whether it is a smooth, rough or irregular surface. This permanent bond does not permit air leakage, which can cause wall streaking.

The front panel of the unit is never in contact with the wall or ceiling, so servicing is never a problem.

The Perma-Lap frame has a 3/8" projection and a 1-1/2" width.

Aquastat

Delays blower motor(s) operation until coil is hot to prevent cold air delivery on start-up. Installs on return pipe in piping end compartment. Temperature set point range 100°-240°F, 10 amps @ 115 volts, 10°F differential, non-adjustable.

Figure 6.3 - Disconnect Switch and Return Air Thermostat, (Solid State Speed Controller is Standard)

Figure 6.4 - Outside Air Wall Box

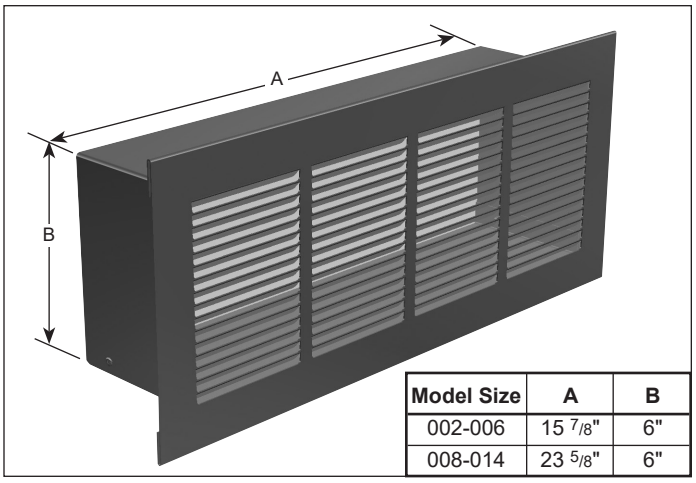

Model Size	A	B
002-006	15 7/8"	6"
008-014	23 5/8"	6"

General Selection Procedure

Selection of a cabinet unit heater requires the following information: 1) room heat loss; 2) heat loss due to ventilation load if outside air is introduced; 3) entering water temperature; 4) entering air temperature; 5) water flow rate and/or final water temperature; 6) required air circulation. Final selection of a cabinet unit heater is based on the following factors:

- Coil selection
- Unit size
- Model type
- Air flow arrangement
- Options and accessories

Coil Selection

Generally, unit size is determined by the coils capacity to offset the design heat loss. Capacities of the standard and high capacity coils overlap, thereby making it possible to select the most economical coil for application requirements. The descriptions which follow illustrate the differences between the coils.

Standard Coil (one row) - This coil will meet the vast majority of heating-application requirements. Maximum operating pressure: 200 psig water at 240°F. This coil is suitable for steam or hot water.

High-Capacity Coil (two, three, & four row) - Designed for use where the design load exceeds the capacity of the standard coil for a given size. This can be especially valuable where installation space is limited, since it will usually permit a smaller unit size to meet design requirements. The high-capacity coil will provide increased capacity over the standard coil in the same unit. The extra capacity of this coil may also allow use of lower water temperatures than the standard coil. 1 & 2 row coils shall be suitable for 200 PSI working pressure with 240°F water or 10psi steam. The 3 & 4 row coils shall be suitable for 200 PSI working pressure with 200°F water.

Unit Size

Cabinet unit heaters should be selected to offset room heat loss. Normally selection is made on the basis of high fan speed. This insures use of the smallest, most economical unit. Selections made in this manner will normally satisfy room heating requirements at lower fan speeds, except during periods of extreme weather.

Hot Water Selection

Hot water heating capacities for cabinet unit heaters are based on standard conditions of 200°F entering water temperature (EWT), 60°F entering air temperature (EAT), and a 20°F water temperature drop (WTD). Conversion factors for other than standard conditions are listed in Table 8.1 on page 8. See formulas, page 9.

An alternate method of unit selection at non-standard conditions requires actual performance to be converted to equivalent standard performance at 200°F EWT and 60°F. The required unit size can easily be determined from standard heating capacity tables on pages 10 and 11. See formulas, page 9.

Example 1 - Standard Coil

Requirements:

- Heating load, 27,000 Btu/hr
- Entering air temperature, 60°F
- Entering water temperature, 210°F
- Water flow, 2 GPM

Solution:

From Table 8.1, page 8, the heating capacity conversion factor is 1.071. From formula 9.2, page 9:

$$\text{Standard Btu/hr} = \frac{27{,}000\ \text{Btu/hr}}{1.071} = 25{,}200\ \text{Btu/hr}$$

Table 10.1, page 10 shows selection of a unit size 004 with 25,800 Btu/hr is sufficient for application requirements.

From formula 9.1, page 9:

Actual Btu/hr = 25,800 Btu/hr x 1.071 = 27,600 Btu/hr

From formula 9.4, page 9:

$$\text{Final Air Temperature} = \frac{27{,}600\ \text{Btu/hr}}{450\ \text{CFM} \times 1.085} + 60°\text{F} = 116°\text{F}$$

Example 2 - Standard Coil

Requirements:

- Heating load, 23,000 Btu/hr
- Entering air temperature, 60°F
- Entering water temperature, 220°F
- Water flow, 3 GPM maximum
- External static pressure, .05" W.C

Solution:

From Table 8.2, page 8, the conversion factor for 0.05" W.C., ESP, can be determined to be 0.90. From formula 9.2, page 9:

$$\text{Btu/hr required} = \frac{23{,}000\ \text{Btu/hr}}{0.90} = 25{,}500\ \text{Btu/hr for .05" ESP.}$$

From Table 8.1, page 8 the heating capacity conversion factor is 1.143. From formula 9.2, page 9:

$$\text{Standard Btu/hr} = \frac{25{,}500\ \text{Btu/hr}}{1.143} = 22{,}300\ \text{Btu/hr}$$

Table 10.1, page 10 shows a selection of a unit size 003 unit with 22,800 Btu/hr is sufficient for application requirements.

Actual capacity is 22,800 Btu/hr x 0.90 x 1.14 = 23,400 Btu/hr

Use formula 9.3, page 9 to calculate water temperature drop.

Use formula 9.4, page 9 to determine final air temperature.

Find CFM at 0.05" ESP from Table 8.2 on page 8.

Table 8.1 (1) - Heating Capacity Conversion Factors

To determine the heating capacity (Btu/hr.) of a cabinet unit heater at any entering water temperature and entering air temperature, multiply the capacity at 200°F EWT and 60°F EAT (data on page 10-11) by the factor from this table. **NOTE:** GPM must be identical to that at 200°F EWT and 60°F EAT.

Entering Water Temp (°F)	Entering Air Temperature (°F)							
	30	40	50	60	70	80	90	100
100	0.518	0.439	0.361	0.286	0.212	0.140	0.069	0.000
110	0.592	0.512	0.434	0.357	0.283	0.210	0.138	0.068
120	0.666	0.585	0.506	0.429	0.353	0.279	0.207	0.137
130	0.740	0.658	0.578	0.500	0.424	0.349	0.276	0.205
140	0.814	0.731	0.651	0.571	0.494	0.419	0.345	0.273
150	0.888	0.805	0.723	0.643	0.565	0.489	0.414	0.342
160	0.962	0.878	0.795	0.714	0.636	0.559	0.483	0.410
170	1.036	0.950	0.867	0.786	0.706	0.629	0.552	0.478
180	1.110	1.024	0.940	0.857	0.777	0.699	0.621	0.547
190	1.184	1.097	1.012	0.929	0.848	0.768	0.690	0.615
200	1.258	1.170	1.084	1.000	0.918	0.838	0.759	0.684
210	1.332	1.243	1.157	1.071	0.989	0.908	0.828	0.752
220	1.406	1.312	1.229	1.143	1.060	0.978	0.897	0.820
230	1.480	1.390	1.301	1.214	1.130	1.048	0.966	0.889
240	1.554	1.463	1.373	1.286	1.201	1.118	1.035	0.957

Table 8.1 (2) - Heating Capacity Conversion Factors (3 & 4 row coils)

To determine the heating capacity (Btu/hr.) of a cabinet unit heater at any entering water temperature and entering air temperature, multiply the capacity at 140°F EWT and 60°F EAT (data on page 12-13) by the factor from this table. Note: GPM must be identical to that at 140°F EWT and 60°F EAT.

Entering Water Temp (°F)	Entering Air Temperature (°F)							
	30	40	50	60	70	80	90	100
100	0.907	0.769	0.632	0.501	0.371	0.245	0.121	0.000
110	1.037	0.897	0.760	0.625	0.496	0.368	0.242	0.119
120	1.166	1.025	0.886	0.751	0.618	0.489	0.363	0.240
130	1.296	1.152	1.012	0.876	0.743	0.611	0.483	0.359
140	1.426	1.280	1.140	1.000	0.865	0.734	0.604	0.478
150	1.555	1.410	1.266	1.126	0.989	0.856	0.725	0.599
160	1.685	1.538	1.392	1.250	1.114	0.979	0.846	0.718
170	1.814	1.664	1.518	1.377	1.236	1.102	0.967	0.837
180	1.944	1.793	1.646	1.501	1.361	1.224	1.088	0.958
190	2.074	1.921	1.772	1.627	1.485	1.345	1.208	1.077
200	2.203	2.049	1.898	1.751	1.608	1.468	1.329	1.198

Table 8.2 - External Static Pressure Conversion Factors (standard coil)

To determine the heating capacity (Btu/hr.) for applications with external static pressure, multiply the capacity at 200°F EWT and 60°F EAT (data on page 10-11) by the factor from this table.

Model Size	0.00" ESP		0.05" ESP		0.10" ESP		0.125" ESP	
	CFM	BTU Factor	CFM	BTU Factor	CFM	BTU Factor	CFM	BTU Factor
002	250	1.00	210	0.90	170	0.80	150	0.77
003	330	1.00	280	0.90	230	0.80	200	0.77
004	450	1.00	400	0.90	325	0.80	285	0.77
006	620	1.00	540	0.90	430	0.80	380	0.77
008	840	1.00	720	0.90	590	0.80	510	0.77
010	1050	1.00	905	0.90	735	0.80	640	0.77
012	1240	1.00	1065	0.90	870	0.80	755	0.77
014	1430	1.00	1230	0.90	1000	0.80	870	0.77

Table 8.3 - CFM vs. Entering Air Temperature Conversion Factors

To determine CFM at various entering air temperatures, multiply CFM from hot water performance tables by factor from this table.

	Entering Air Temperature (°F)							
	30	**40**	**50**	**60**	**70**	**80**	**90**	**100**
Factor	1.050	1.040	1.020	1.000	0.982	0.964	0.945	0.928

Table 9.1 - Propylene amd Ethylene Glycol Correction Factors

The following correction factors are for various percentages of propylene or ethylene glycol in water. Use the factors to correct the heating capacity of cabinet unit heaters when using an propylene or ethylene glycol solution. Follow the normal procedures in determining the heating capacity of a cabinet unit heater at any water temperature and entering air temperature, then apply the correction factor from the following table to determine the corrected heating capacity based on an propylene or ethylene glycol solution.

	Entering Glycol Solution Temperature							
	Propylene Glycol				Ethylene Glycol			
Glycol %	**100°F**	**150°F**	**200°F**	**240°F**	**100°F**	**150°F**	**200°F**	**240°F**
20	0.96	0.96	0.96	0.95	0.99	0.99	0.99	0.98
30	0.93	0.93	0.93	0.93	0.96	0.96	0.96	0.96
40	0.92	0.92	0.92	0.92	0.95	0.95	0.95	0.95
50	0.88	0.89	0.89	0.89	0.93	0.94	0.94	0.94
60	0.85	0.860	0.87	0.87	0.89	0.90	0.92	0.92

Formulas: Hot Water

9.1) $BTU_A = BTU_S \times Factor$ (Table 8.1 or 8.2, page 8)

9.2) $BTU_S = \dfrac{BTU_A}{Factor}$ (Table 8.1 or 8.2, page 8)

9.3) $D_A = \dfrac{BTU_A}{500 \times G_A}$

9.4) $F_A = \dfrac{BTU_A}{CFM_A \times 1.085} + E_A$

Identification of Symbols

BTU = Btu/hr performance
D = Water temperature drop (°F)
E = Entering air temperature (°F)
F = Final air temperature (°F)
G = Gallons per minute (GPM)

Subscripts

S = Standard operating condition for 1 & 2 row coils (140°F EWT, 60°F EAT)
S = Standard operating condition for 3 & 4 row coils (140°F EWT, 60°F EAT)
A = Actual operating conditions

Table 10.1 - Standard One Row Coil at Standard Conditions (200°F Entering Water/60°F Entering Air)

Unit Size	1 Row, 200F EWT, 60F EAT													
	High Fan Speed Data				Med Fan Speed Data				Low Fan Speed Data				Water Data	
	CFM	Btu/hr	WTD	FAT	CFM	BTU/ HR	WTD	FAT	CFM	Btu/hr	WTD	FAT	GPM	WPD (ft)
		10,700	44.7	100		9,522	39.7	104		8,200	34.1	110	0.5	0.1
		11,900	24.9	104		10,604	22.1	109		9,100	19.0	116	1	0.1
002	250	**12,400**	**20.0**	**106**	200	**11,041**	**17.7**	**111**	150	**9,500**	**15.2**	**118**	**1.3**	**0.2**
		12,700	17.6	107		11,244	15.6	112		9,700	13.4	119	1.5	0.2
		12,900	13.4	107		11,441	11.9	113		9,800	10.2	120	2	0.3
		18,000	37.5	110		15,263	31.8	113		12,100	25.3	117	1	0.1
		20,100	27.9	116		17,079	23.7	119		13,600	18.9	124	1.5	0.2
003	330	**22,400**	**20.0**	**123**	265	**18,956**	**17.2**	**126**	195	**15,100**	**13.5**	**131**	**2.3**	**0.3**
		22,700	18.9	123		19,227	16.0	127		15,300	12.7	132	2.5	0.4
		23,000	16.0	124		19,559	13.6	128		15,600	10.8	134	3	0.5
		20,400	42.5	102		17,870	37.2	106		15,100	31.4	111	1	0.1
		25,200	26.3	112		22,096	23.0	117		18,700	19.4	124	2	0.3
004	450	**28,400**	**20.0**	**118**	360	**25,019**	**17.4**	**124**	270	**21,000**	**14.8**	**132**	**3**	**0.5**
		30,400	15.8	122		26,640	13.9	128		22,500	11.7	137	4	0.7
		30,700	12.8	123		26,957	11.2	129		22,800	9.5	138	5	0.9
		37,000	38.6	115		32,328	33.7	120		27,100	28.2	128	2	0.3
		40,700	28.3	121		35,544	24.7	126		29,800	20.7	134	3	0.6
006	620	**44,800**	**20.0**	**127**	495	**39,145**	**17.4**	**133**	370	**32,800**	**14.6**	**142**	**4.7**	**1.0**
		45,300	18.9	127		39,537	16.5	134		33,200	13.8	143	5	1.1
		46,200	16.0	129		40,314	14.0	135		33,800	11.7	144	6	1.4
		41,900	43.6	106		36,816	38.4	109		31,200	32.5	113	2	0.1
		47,000	24.5	112		41,370	21.5	115		35,100	18.3	119	4	0.2
008	840	**49,000**	**20.0**	**114**	695	**43,095**	**17.6**	**117**	545	**36,600**	**14.9**	**122**	**5.1**	**0.4**
		50,100	17.4	115		44,097	15.3	118		37,400	13.0	123	6	0.5
		50,100	17.4	115		44,997	11.7	120		37,400	13.0	123	8	0.5
		50,800	35.3	105		45,555	31.6	108		39,600	27.5	113	3	0.1
		54,700	22.8	108		49,051	20.4	112		42,700	17.8	117	5	0.4
010	1,050	**55,900**	**20.0**	**109**	870	**50,084**	**18.0**	**113**	685	**43,600**	**15.6**	**119**	**5.8**	**0.5**
		57,200	17.0	110		51,239	15.2	114		44,600	13.3	120	7	0.7
		58,200	13.5	111		52,119	12.1	115		45,300	10.5	121	9	1.1
		68,200	35.5	111		60,153	31.3	114		51,300	26.7	119	4	0.2
		70,800	24.6	113		62,498	21.7	116		53,300	18.5	121	6	0.6
012	1,240	**72,400**	**20.0**	**114**	1,025	**63,872**	**17.7**	**117**	805	**54,500**	**15.1**	**122**	**7.5**	**0.9**
		74,200	15.4	115		65,427	13.6	119		55,800	11.6	124	10	1.4
		74,800	13.0	116		66,012	11.5	119		56,300	9.8	124	12	1.8
		73,800	38.4	108		65,709	34.2	111		56,900	29.6	116	4	0.2
		76,900	26.7	110		68,484	23.8	113		59,300	20.6	119	6	0.6
014	1,430	**79,500**	**20.0**	**111**	1,180	**70,745**	**17.8**	**115**	930	**61,200**	**15.4**	**121**	**8.3**	**1.0**
		80,600	16.8	112		71,776	15.0	116		62,100	12.9	122	10	1.4
		81,200	14.1	112		72,294	12.6	116		62,600	10.9	122	12	1.8

High, Medium & Low Speed data is for Standard PSC Motor & Standard EC Motor
Standard PSC Motor offers variable speed controller
Standard EC Motor offers 3-speed switch

***Condition of Acceptability** - EWT must be less than 240°F.

Table 11.1 - Optional High Capacity Two Row Coil at Standard Conditions (200°F Entering Water/60°F Entering Air)

Unit Size	2 Row, 200F EWT, 60F EAT													
	High Fan Speed Data				Med Fan Speed Data				Low Fan Speed Data				Water Data	
	CFM	Btu/hr	WTD	FAT	CFM	BTU/HR	WTD	FAT	CFM	Btu/hr	WTD	FAT	GPM	WPD (ft)
		20,200	42.0	134		17,030	35.5	138		13,000	27.1	146	1	0.7
		21,600	30.1	140		18,267	25.4	144		13,900	19.4	152	1.5	1.1
002	250	**22,700**	**23.7**	**144**	200	**19,182**	**20.0**	**148**	140	**14,600**	**15.2**	**156**	**2**	**1.8**
		23,400	20.0	146		19,682	17.1	151		15,000	12.9	159	2.4	2.7
		23,700	16.5	148		20,047	13.9	152		15,300	10.6	161	3	4.3
		31,100	32.4	148		26,584	27.7	152		21,000	21.9	159	2	1.4
		31,900	26.6	151		27,317	22.8	155		21,600	18.0	162	2.5	2.1
003	330	**32,600**	**22.6**	**152**	265	**27,883**	**19.4**	**157**	195	**22,000**	**15.3**	**164**	**3**	**2.8**
		33,000	20.0	154		28,215	17.3	158		22,300	13.5	166	3.4	3.5
		33,300	17.4	155		28,513	14.9	159		22,500	11.7	167	4	4.5
		41,200	43.0	146		35,314	36.8	150		28,300	29.4	156	2	1.5
		42,600	35.3	149		36,276	30.2	153		29,000	24.2	159	2.5	2.4
004	450	**43,300**	**30.1**	**151**	360	**37,067**	**25.7**	**155**	270	**29,700**	**20.6**	**161**	**3**	**2.9**
		44,500	23.2	153		38,140	19.9	158		30,500	15.9	164	4	5.0
		44,900	20.0	154		38,487	17.1	159		30,800	13.7	165	4.7	8.7
		49,700	51.7	134		42,543	44.3	139		34,600	36.0	146	2	1.4
		53,600	37.2	140		45,937	31.9	146		37,300	25.9	153	3	2.8
006	620	**56,500**	**29.5**	**145**	495	**48,430**	**25.2**	**150**	370	**39,300**	**20.5**	**158**	**4**	**4.8**
		58,400	24.3	148		50,024	20.8	153		40,600	16.9	161	5	7.2
		59,300	20.0	149		50,748	17.1	154		41,200	13.9	163	6.2	10.7
		66,800	27.9	134		59,414	24.8	139		50,500	21.1	146	5	1.0
		70,900	21.1	138		63,023	18.8	144		53,600	15.9	151	7	1.7
008	840	**71,700**	**20.0**	**139**	695	**63,767**	**17.7**	**145**	540	**54,200**	**15.1**	**152**	**7.5**	**1.9**
		74,900	15.6	143		66,545	13.9	148		56,600	11.8	157	10	3.2
		76,100	13.2	144		67,709	11.5	150		57,500	10.0	158	12.3	4.5
		79,400	28.0	130		71,387	24.8	136		61,600	21.4	144	6	1.4
		83,000	21.6	134		74,662	19.4	139		64,500	16.8	147	8	2.2
010	1,050	**84,200**	**20.0**	**135**	870	**75,744**	**17.9**	**140**	680	**65,400**	**15.5**	**149**	**8.8**	**2.5**
		87,600	15.2	138		78,772	13.7	143		68,000	11.8	152	12	4.3
		88,500	13.2	138		79,608	11.8	144		68,700	10.2	153	14	5.8
		99,000	29.4	135		89,185	26.5	140		76,400	22.7	149	7	1.7
		102,300	23.7	137		92,161	21.3	143		78,900	18.3	152	9	2.6
012	1,240	**104,800**	**20.0**	**139**	1,025	**94,402**	**18.0**	**145**	790	**80,800**	**15.4**	**154**	**10.9**	**3.7**
		106,800	17.1	141		96,214	15.4	147		82,400	13.2	156	13	5.0
		107,900	15.0	142		97,291	13.5	147		83,300	11.6	157	15	6.5
		113,400	26.2	134		101,656	23.5	139		87,000	20.1	148	9	2.6
		115,900	22.0	136		103,965	19.7	141		89,000	16.9	150	11	3.7
014	1,430	**117,200**	**20.0**	**137**	1,180	**105,130**	**18.0**	**142**	915	**90,000**	**15.4**	**151**	**12.2**	**4.5**
		119,500	16.6	138		107,207	14.9	144		91,800	12.7	152	15	6.5
		120,600	14.8	139		108,139	13.3	144		92,600	11.3	153	17	8.2

High, Medium & Low Speed data is for Standard PSC Motor & Standard EC Motor
Standard PSC Motor offers variable speed controller
Standard EC Motor offers 3-speed switch

***Condition of Acceptability** - EWT must be less than 240°F.

Table 12.1 - Optional High Capacity Three Row Coil at Standard Conditions (140°F Entering Water/60°F Entering Air)

Unit Size	3 Row, 200F EWT, 60F EAT													
	High Fan Speed Data				Med Fan Speed Data				Low Fan Speed Data				Water Data	
	CFM	BTU/HR	WTD	FAT	CFM	BTU/HR	WTD	FAT	CFM	BTU/HR	WTD	FAT	GPM	WPD
		16827	33.7	120		14044	28.1	125		11840	24.7	128	1.00	0.3
		17112	30.0	121		14217	24.9	126		12017	21.9	129	1.14	0.4
002	260	17508	24.5	122	200	14461	20.3	127	160	12306	18.0	131	1.43	0.6
		17824	**20.0**	**123**		**14651**	**16.4**	**128**		**12544**	**14.7**	**132**	**1.78**	**0.8**
		17966	18.0	124		14729	14.7	128		12623	13.2	133	2.00	1.0
		22669	31.8	122		18715	26.2	127		15270	22.3	130	1.43	0.7
		23092	27.0	123		18963	22.1	128		15531	18.9	132	1.71	1.0
003	340	23392	23.4	124	260	19135	19.2	128	200	15744	16.4	133	2.00	1.3
		23669	**20.0**	**124**		**19302**	**16.3**	**129**		**15950**	**14.0**	**134**	**2.37**	**1.8**
		23925	16.8	125		19457	13.6	129		16101	11.7	134	2.85	2.5
		30547	30.6	120		25361	25.4	125		20974	21.9	129	2.00	0.5
		30994	27.1	121		25627	22.4	126		21260	19.4	130	2.28	0.6
004	470	31619	22.2	122	360	26009	18.2	127	280	21708	15.8	131	2.86	0.9
		31889	**20.0**	**123**		**26165**	**16.4**	**127**		**21894**	**14.3**	**132**	**3.19**	**1.1**
		32050	18.7	123		26260	15.3	128		21992	13.4	132	3.43	1.3
		43910	30.8	123		36301	25.4	127		29894	21.8	131	2.86	1.3
		44658	26.1	124		36744	21.4	128		30361	18.5	132	3.43	1.8
006	650	45186	22.6	124	500	37052	18.5	129	390	30741	16.0	133	4.00	2.4
		45570	**20.0**	**125**		**37276**	**16.4**	**129**		**31031**	**14.2**	**133**	**4.56**	**3.1**
		46108	16.2	126		37600	13.2	130		31368	11.4	134	5.71	4.6
		62592	31.3	126		54399	27.2	129		47103	24.6	131	4.00	1.2
		63313	27.7	127		54885	24.0	130		47591	21.7	132	4.57	1.5
008	880	64295	22.5	128	730	55558	19.5	130	610	48364	17.6	133	5.71	2.3
		64755	**20.0**	**128**		**55851**	**17.3**	**131**		**48730**	**15.7**	**134**	**6.48**	**2.9**
		65174	17.6	129		56155	15.1	131		49014	13.8	134	7.42	3.7
		74254	32.5	123		65414	28.6	126		57007	26.0	128	4.57	1.6
	1100	75772	26.5	124		66493	23.3	127		58099	21.2	130	5.71	2.3
010		76810	22.4	125	920	67218	19.6	128	770	58943	17.9	131	6.85	3.2
		77381	**20.0**	**125**		**67593**	**17.5**	**128**		**59428**	**16.0**	**131**	**7.74**	**4.0**
		78067	17.1	126		68063	14.9	129		59891	13.7	132	9.14	5.4
		90104	31.6	124		78684	27.6	127		68200	24.9	130	5.71	2.9
	1300	91474	26.7	125		79620	23.2	128		69185	21.0	131	6.85	4.0
012		92451	23.1	126	1080	80300	20.1	129	900	69965	18.2	132	7.99	5.3
		93278	**20.0**	**126**		**80825**	**17.3**	**129**		**70617**	**15.8**	**132**	**9.33**	**7.0**
		93736	18.2	127		81145	15.8	130		70913	14.4	133	10.28	8.3
		100464	32.0	122		88311	28.1	125		77352	25.7	128	6.28	3.4
	1500	101993	27.5	123		89373	24.1	126		78454	22.0	129	7.42	4.6
014		103080	24.1	124	1250	90147	21.1	127	1050	79346	19.3	130	8.57	6.0
		104342	**20.0**	**124**		**91038**	**17.4**	**127**		**80354**	**16.0**	**131**	**10.43**	**8.6**
		104831	18.4	125		91356	16.0	128		80660	14.7	131	11.42	10.1

High & Medium Speed data is for High Static PSC Motor. Medium Speed is lowest speed for this motor option.
High, Medium & Low Speed data is for High Static EC Motor
High Static PSC Motor offers variable speed controller
High Static EC Motor offeres 3-speed switch.

***Condition of Acceptability** - EWT must be less than 200°F.

Table 13.1 - Optional High Capacity Four Row Coil at Standard Conditions (140°F Entering Water/60°F Entering Air)

Unit Size	4 Row, 140F EWT, 60F EAT													
	High Fan Speed Data				Med Fan Speed Data				Low Fan Speed Data				Water Data	
	CFM	BTU/HR	WTD	FAT	CFM	BTU/HR	WTD	FAT	CFM	BTU/HR	WTD	FAT	GPM	WPD
002	260	19607	34.3	130	200	15913	27.9	134	160	13122	23.9	136	1.14	1.2
		19942	27.9	131		16088	22.5	134		13329	19.5	137	1.43	1.8
		20154	23.5	132		16197	18.9	135		13485	16.4	138	1.71	2.5
		20318	**20.0**	**132**		**16285**	**16.0**	**135**		**13600**	**13.9**	**138**	**2.03**	**3.5**
		20408	17.9	133		16331	14.3	136		13647	12.4	139	2.28	4.3
003	340	26013	30.4	131	260	20916	24.4	134	200	16682	20.3	137	1.71	1.4
		26290	26.3	132		21054	21.1	135		16840	17.6	138	2.00	1.8
		26483	23.2	132		21150	18.5	135		16973	15.5	138	2.28	2.3
		26682	**20.0**	**133**		**21252**	**15.9**	**136**		**17113**	**13.4**	**139**	**2.67**	**3.1**
		26928	15.7	133		21361	12.5	136		17259	10.5	140	3.43	4.9
004	470	35288	30.9	130	360	28550	25.0	133	280	23030	21.0	136	2.28	0.9
		35859	25.1	131		28850	20.2	134		23375	17.1	137	2.86	1.3
		36230	21.2	131		29035	16.9	135		23639	14.4	138	3.43	1.8
		36334	**20.0**	**132**		**29085**	**16.0**	**135**		**23716**	**13.6**	**138**	**3.63**	**2.0**
		36681	16.1	132		29258	12.8	135		23927	10.9	139	4.57	3.1
006	650	49363	34.6	130	500	39999	28.0	134	390	32247	23.5	136	2.86	1.2
		50071	29.2	131		40358	23.6	135		32647	19.9	137	3.43	1.7
		50561	25.3	132		40609	20.3	135		32981	17.2	138	4.00	2.2
		51171	**20.0**	**133**		**40911**	**16.0**	**136**		**33440**	**13.6**	**139**	**5.12**	**3.4**
		51567	16.4	133		41109	13.1	136		33643	11.2	140	6.28	5.0
008	880	69023	30.2	133	730	59111	25.9	135	610	50530	23.0	136	4.57	1.5
		69531	27.1	133		59407	23.1	135		50869	20.6	137	5.14	1.9
		69919	24.5	134		59641	20.9	136		51160	18.7	137	5.71	2.3
		70553	**20.0**	**134**		**60040**	**17.0**	**136**		**51659**	**15.3**	**138**	**7.06**	**3.4**
		70867	17.7	135		60195	15.1	136		51853	13.5	138	7.99	4.2
010	1100	82970	32.3	130	920	72075	28.1	133	770	62011	25.1	134	5.14	1.9
		84196	26.8	131		72859	23.2	133		62882	20.9	135	6.28	2.7
		84994	22.9	132		73377	19.8	134		63530	17.8	136	7.42	3.7
		85567	**20.0**	**132**		**73759**	**17.2**	**134**		**63955**	**15.6**	**137**	**8.56**	**4.8**
		85787	18.8	132		73910	16.2	134		64088	14.6	137	9.14	5.4
012	1300	100552	29.4	132	1080	86403	25.2	134	900	73873	22.5	136	6.85	2.4
		101444	25.4	132		86935	21.8	135		74496	19.4	136	7.99	3.1
		102095	22.4	133		87340	19.1	135		74993	17.1	137	9.14	4.0
		102557	**20.0**	**133**		**87635**	**17.1**	**135**		**75359**	**15.3**	**137**	**10.26**	**4.9**
		102947	18.0	133		87873	15.4	135		75610	13.8	137	11.42	6.0
014	1500	113635	28.4	130	1250	98247	24.6	133	1050	84934	22.1	135	7.99	3.1
		114519	25.1	131		98806	21.6	133		85580	19.5	135	9.14	4.0
		115217	22.4	131		99286	19.3	134		86113	17.5	136	10.28	4.9
		115838	**20.0**	**132**		**99620**	**17.2**	**134**		**86584**	**15.6**	**136**	**11.58**	**6.1**
		116200	18.5	132		99869	15.9	134		86841	14.4	136	12.56	7.1

High & Medium Speed data is for High Static PSC Motor. Medium Speed is lowest speed for this motor option.
High, Medium & Low Speed data is for High Static EC Motor
High Static PSC Motor offers variable speed controller
High Static EC Motor offeres 3-speed switch.

***Condition of Acceptability** - EWT must be less than 200°F.

General Selection Procedure

Selection of a cabinet unit heater requires the following information: 1) room heat loss; 2) heat loss due to ventilation load if outside air is introduced; 3) steam pressure available; 4) entering air temperature; 5) required air circulation. Final selection of a cabinet unit heater is based on the following factors:

- Coil selection - One Row Coil only
- Unit size
- Model type
- Air flow arrangement
- Options and accessories

Coil Selection

Generally, unit size is determined by the coils capacity to offset the design heat loss. Capacities of the standard coils overlap, thereby making it possible to select the most economical coil for application requirements.

Standard Coil (one row) - This coil will meet the vast majority of heating-application requirements. Maximum operating pressure: 10 psig steam. This coil is suitable for steam or hot water.

Steam Selection

Steam capacities for cabinet unit heaters are based on standard conditions of 2 psig steam and a 60°F entering air temperature (EAT). Conversion factors for other than standard conditions are listed in Table 15.1, page 15.

Example 1 - Standard Coil

Requirements:

- Heating load, 29,000 Btu/hr
- Entering air temperature, 60°F
- Entering steam pressure, 5 psig

Solution:

From Table 15.1 on page 15, conversion factor is 1.05.

From formula 15.2, page 15:

$$\text{Standard Btu/hr} = \frac{29{,}000 \text{ Btu/hr}}{1.05} = 27{,}600 \text{ Btu/hr}$$

Table 16.1, page 16 shows selection of a unit size 003 with 28,300 Btu/hr is sufficient for application requirements.

From formula 15.1, page 15:

Actual Btu/hr = 28,300 Btu/hr x 1.05 = 29,400 Btu/hr

From formula 15.3, page 15:

$$\text{Actual Condensate rate} = \frac{\text{Actual Btu/hr}}{\text{Latent Heat or Steam}}$$

$$= \frac{29{,}400 \text{ Btu/hr}}{961} = 31 \text{ lbs/hr}$$

From formula 15.4, page 15:

$$\text{Final Air Temperature} = \frac{29{,}400 \text{ Btu/hr}}{330 \times 1.085} + 60°\text{F} = 143°\text{F}$$

Table 15.1 - Heating Capacity Conversion Factors

To determine the heating capacity (Btu/hr.) of a cabinet unit heater at any steam pressure and entering air temperature, multiply the capacity (2 lbs. steam, 60°F EAT) on page 14 by the factor from this table.

Steam Press. (psig)	Steam Temp. (°F)	Latent Heat of Steam	Temperature of Entering Air (°F)							
			30°	40°	50°	60°	70°	80°	90°	100°
0	212	970	1.19	1.11	1.03	0.96	0.88	0.81	0.74	0.67
2	219	966	1.24	1.16	1.08	1.00	0.93	0.85	0.78	0.71
5	227	961	1.29	1.21	1.13	1.05	0.97	0.90	0.83	0.76
10	239	953	1.38	1.29	1.21	1.13	1.06	0.98	0.91	0.84

Table 15.2 - External Static Pressure Conversion Factors (standard coil)

To determine the heating capacity (Btu/hr.) for applications with external static pressure, multiply the capacity (2 lbs. steam and 60°F EAT) on page 14 by the factor from this table.

The following conversion factors may be used with standard steam data Table 16.1, page 16.

Model Size	0.00" ESP		0.05" ESP		0.10" ESP		0.125" ESP	
	CFM	BTU Factor	CFM	BTU Factor	CFM	BTU Factor	CFM	BTU Factor
002	250	1.00	210	0.90	170	0.80	150	0.77
003	330	1.00	280	0.90	230	0.80	200	0.77
004	450	1.00	400	0.90	325	0.80	285	0.77
006	620	1.00	540	0.90	430	0.80	380	0.77
008	840	1.00	720	0.90	590	0.80	510	0.77
010	1050	1.00	905	0.90	735	0.80	640	0.77
012	1240	1.00	1065	0.90	870	0.80	755	0.77
014	1430	1.00	1230	0.90	1000	0.80	870	0.77

Table 15.3 - CFM Versus Entering Air Temperature Conversion Factors

To determine CFM at various entering air temperature multiply the CFM from steam performance tables by factor from this table.

	Entering Air Temperature (°F)							
	30	40	50	60	70	80	90	100
Factor	1.050	1.040	1.020	1.000	0.982	0.964	0.945	0.928

Formulas: Steam

13.1) $BTU_A = BTU_S \times Factor$ (Table 15.1 or 15.2)

15.2) $BTU_S = \dfrac{BTU_A}{Factor}$ (Table 15.1 or 15.2)

15.3) $C_A = \dfrac{BTU_A}{\text{Latent Heat of Steam}}$

15.4) $F_A = \dfrac{BTU_A}{CFM_A \times 1.085} + E_A$

Identification of Symbols

BTU = Btu/hr performance
C = Condensate (LBS/hr.)
E = Entering air temperature (°F)
F = Final air temperature (°F)

Subscripts

S = Standard operating condition (2 lbs. steam, 60°F EAT)
A = Actual operating conditions

Table 16.1 - Standard One Row Coil at Standard Conditions (2 lbs. Steam/60°F Entering Air)

Coil Type	Unit Size	High Fan Speed Data				Low Fan Speed Data			
		CFM	Btu/hr	Condensate (lbs/hr)	Final Air Temp (°F)	CFM	Btu/hr	Condensate (lbs/hr)	Final Air Temp (°F)
Standard 1-Row Coil	**002**	250	19,800	21	133	150	14,600	15	156
	003	330	28,300	29	139	195	18,000	19	145
	004	450	42,500	44	147	270	29,300	30	160
	006	620	52,100	54	137	370	42,700	44	166
	008	840	67,700	70	134	545	52,900	55	149
	010	1,050	76,000	79	126	685	60,600	63	141
	012	1,240	95,400	99	130	805	75,100	78	146
	014	1,430	102,600	106	126	930	81,700	85	141

Mounting Height

Height at which cabinet unit heaters are installed is critical. Maximum mounting heights for all units are listed in the tables below. The data in tables are based on operating conditions of 2 lbs. steam or 220°F entering water with 60°F entering air. When operating conditions are other than those above, refer to chart for mounting height correction factor. To obtain the maximum mounting height at actual operating conditions, multiply the appropriate factor from chart by the mounting height in Tables. The mounting heights must be followed closely to assure maximum comfort.

Strong opposing drafts, large obstructions in the air stream of the unit, and higher than normal discharge air temperatures (resulting from high steam pressures) can prevent the heated air discharged by the cabinet unit from reaching the floor.

Under unfavorable conditions such as these, allowances must be made to assure maintenance of desired comfort.

Table / Figure 17.1
Maximum Mounting Height ①

Size	H (Ft.)	T (Ft.)
002	8	15
003	8	18
004	9	22
006	9	23
008	10	26
010	10	27
012	11	26
014	11	27

① Maximum mounting height and corresponding heat throw of heaters operating at standard conditions (2 lbs. steam or 220°F entering water, 60° entering air).

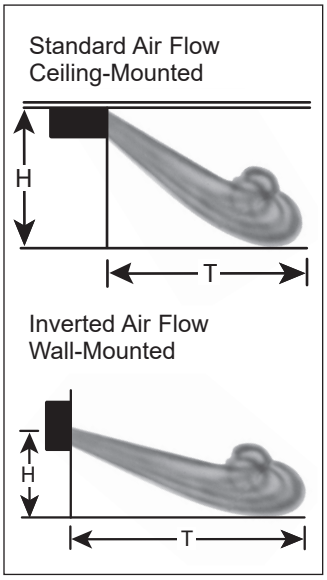

Table / Figure 17.2
Maximum Mounting Height ①

Size	H (Ft.)	T (Ft.)
002	7	8
003	8	10
004	8	11
006	8	12
008	10	16
010	10	18
012	11	20
014	11	21

① Maximum mounting height and corresponding heat throw of heaters operating at standard conditions (2 lbs. steam or 220°F entering water, 60° entering air).

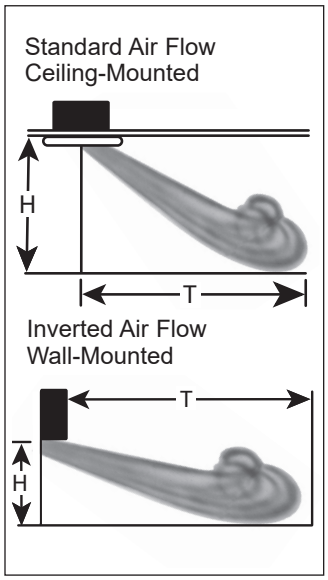

Table 17.3
Maximum Mounting Heights Correction Factors

These correction factors are to be used as multipliers to correct the maximum recommended mounting heights “H” or heat throw “T” of cabinet unit heaters when operated with steam pressures other than 2 pounds or with water at other than entering temperature of 220°F.

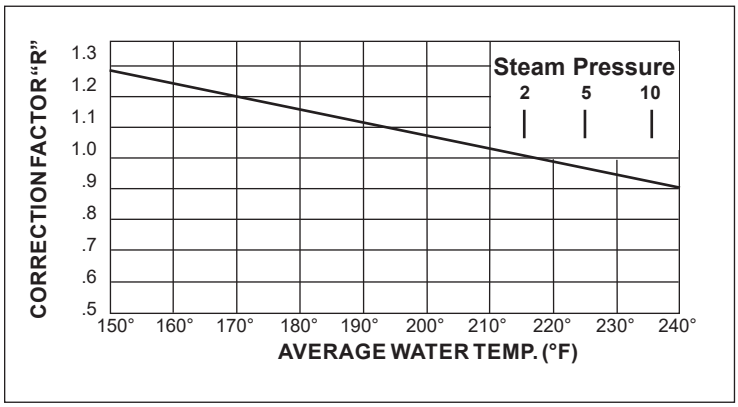

Figure 18.1 - Floor Model C, Sizes 002-014 Steam/Hot Water Cabinet Unit Heaters

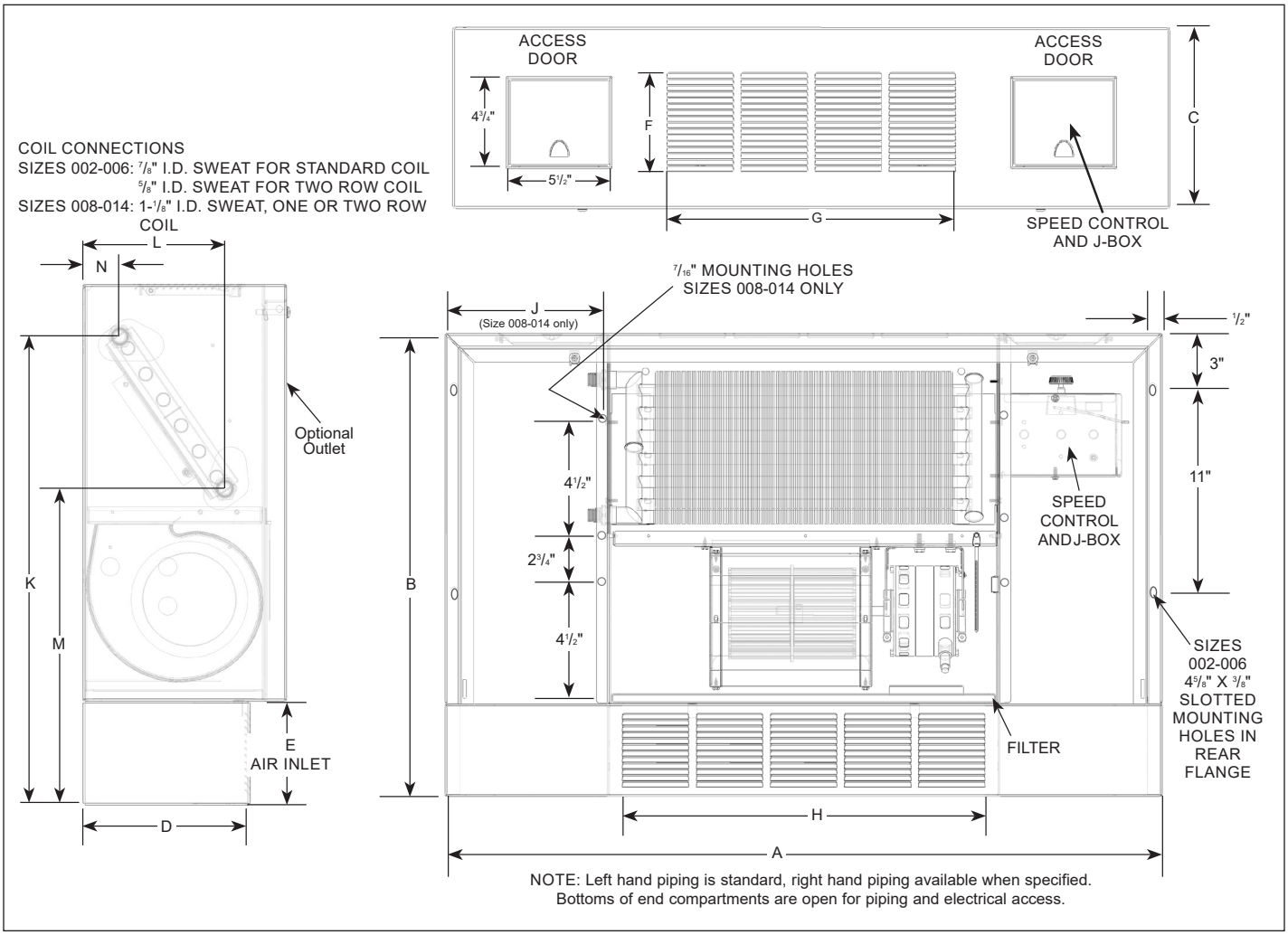

NOTE: Left hand piping is standard, right hand piping available when specified.
Bottoms of end compartments are open for piping and electrical access.

Table 18.1 - Cabinet Dimensions (inches)

Unit Size	A	B	C	D	E	F	G	H	J	Approx. Unit Weight lbs. "C"	Approx. Unit Weight lbs. "CW"
002	38-3/4	25	9-3/4	8	5	5-1/8	15-5/8	19-5/8	–	85	90
003	43-3/4	25	9-3/4	8	5	5-1/8	19-5/8	23-5/8	–	90	100
004	48-3/4	25	9-3/4	8	5	5-1/8	27-5/8	27-5/8	–	105	115
006	61-3/4	25	9-3/4	8	5	5-1/8	39-5/8	39-5/8	–	125	135
008	71-3/4	28	12	10	7	5-1/8	47-5/8	30-5/8	9-3/4	185	205
010	71-3/4	28	12	10	7	5-7/8	47-5/8	39-5/8	9-3/4	185	205
012	83-3/4	28	12	10	7	5-1/8	59-5/8	51-5/8	9-3/4	210	240
014	83-3/4	28	12	10	7	5-7/8	59-5/8	51-5/8	9-3/4	210	240

Table 18.2 - Filter Dimensions (inches) ①

Model Size	Filter Size
002	8-1/2 x 20-3/4 x 1/2
003	8-1/2 x 25-3/4 x 1/2
004	8-1/2 x 30-3/4 x 1/2
006	8-1/2 x 43-3/4 x 1/2
008 & 010	10-3/4 x 49-3/4 x 1/2
012 & 014	10-3/4 x 61-3/4 x 1/2

① Filters are permanent/cleanable.

Table 18.3 - Coil Connection Dimensions (inches)

Unit Size	K	L	M	N
002 thru 006	22-1/2	7-3/8	15-1/4	2-3/8
008 thru 014	25-5/8	9-1/4	18	1-5/8

SEE PAGE 20, COIL CONNECTION DIMENSIONS FOR 3 & 4 ROW UNIT

Figure 19.1 - Wall or Ceiling Model CW, Sizes 002-014 Steam/Hot Water Cabinet Unit Heaters ①

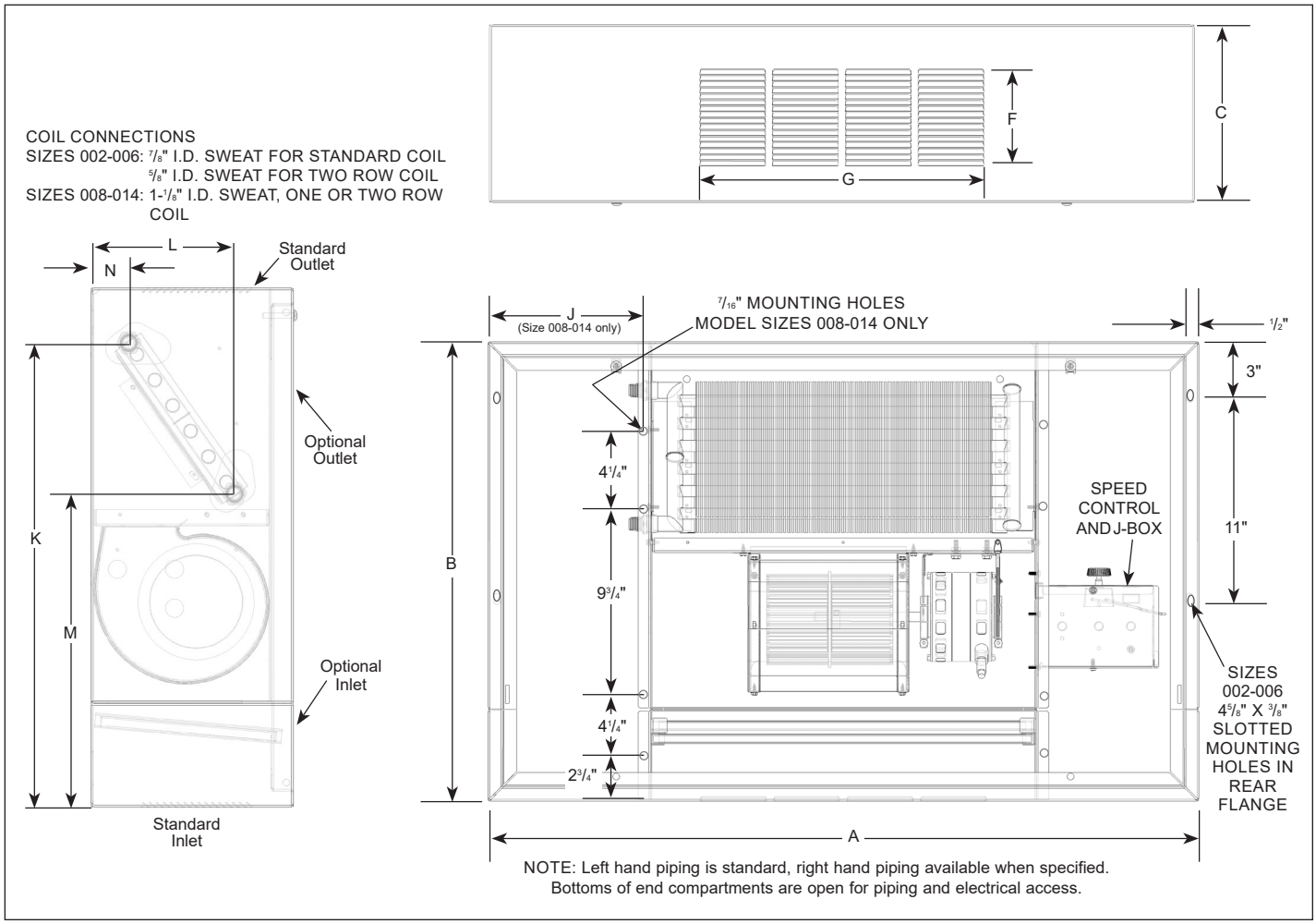

① For inverted airflow applications, the unit is flipped 180° upside down from what is shown in Figure 19.1.

Table 19.1 - Cabinet Dimensions (inches)

Unit Size	A	B	C	F	G	J	Approx. Shipping Weight lbs.	Approx. Unit Weight lbs. "CW"
002	38-3/4	25	9-3/4	5-1/8	15-5/8	–	85	90
003	43-3/4	25	9-3/4	5-1/8	19-5/8	–	90	100
004	48-3/4	25	9-3/4	5-1/8	27-5/8	–	105	115
006	61-3/4	25	9-3/4	5-1/8	39-5/8	–	125	135
008	71-3/4	28	12	5-1/8	47-5/8	9-3/4	185	205
010	71-3/4	28	12	5-7/8	47-5/8	9-3/4	185	205
012	83-3/4	28	12	5-1/8	59-5/8	9-3/4	210	240
014	83-3/4	28	12	5-7/8	59-5/8	9-3/4	210	240

Table 19.2 - Filter Dimensions (inches) ①

Model Size	Filter Size
002	8-1/2 x 20-3/4 x 1/2
003	8-1/2 x 25-3/4 x 1/2
004	8-1/2 x 30-3/4 x 1/2
006	8-1/2 x 43-3/4 x 1/2
008 & 010	10-3/4 x 49-3/4 x 1/2
012 & 014	10-3/4 x 61-3/4 x 1/2

① Filters are permanent/cleanable.

Table 19.3 - Coil Connection Dimensions (inches)

Unit Size	K	L	M	N
002 thru 006	22-1/2	7-3/8	15-1/4	2-3/8
008 thru 014	25-5/8	9-1/4	18	1-5/8

SEE PAGE 20, COIL CONNECTION DIMENSIONS FOR 3 & 4 ROW UNIT

Figure 20.1 - C & CW Coil Connections Dimensions (3 &4 Row Coil Units):

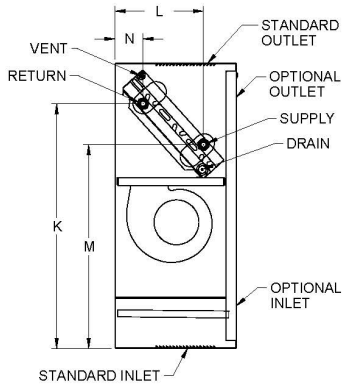

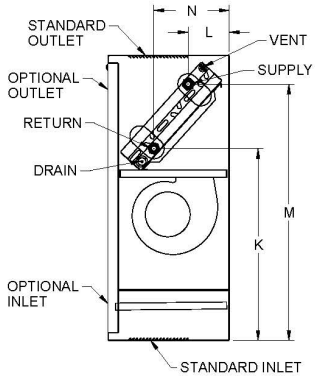

COIL CONNECTIONS:
SIZES 08-14: 7/8" ID SWEAT FOR 3-ROW COIL
1-1/8" ID SWEAT FOR 4-ROW COIL

COIL CONNECTION DIMENSIONS (INCHES)				
UNIT SIZE	K	L	M	N
CW08-14 (3 ROW LH)	24-1/8	8-3/4	20-1/8	2-3/4
CW08-14 (3 ROW RH)	19	4	25-3/8	7-1/2
CW08-14 (4 ROW LH)	24-1/8	8-7/8	20-1/4	2-3/4
CW08-14 (4 ROW RH)	19	4-1/8	25-3/8	7-1/2

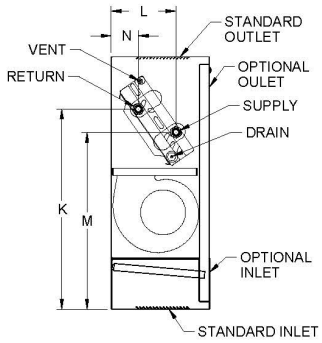

CW02-06, 3 & 4 ROW LH UNIT

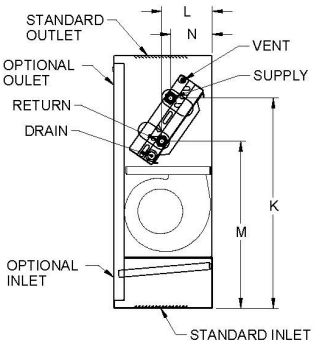

CW02-06, 3 & 4 ROW RH UNIT

COIL CONNECTIONS:
SIZES 02-06: 7/8" ID SWEAT THREE OR FOUR ROW COIL

COIL CONNECTION DIMENSIONS (INCHES)				
UNIT SIZE	K	L	M	N
CW02-06 (3 ROW LH)	20	6-1/2	17-3/4	2-3/4
CW02-06 (3 ROW RH)	16-3/4	4-1/8	21	5
CW02-06 (4 ROW LH)	20	6-1/2	17-3/4	2-3/4
CW02-06 (4 ROW RH)	16-3/4	4-1/4	21	5

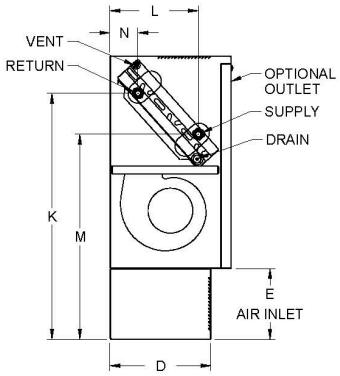

C08-14, 3 & 4 ROW LH UNIT

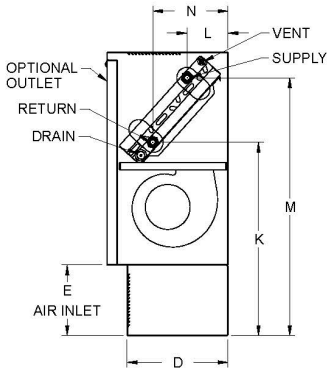

C08-14, 3 & 4ROW RH UNIT

COIL CONNECTIONS:
SIZES 08-14: 7/8" ID SWEAT FOR 3-ROW COIL
1-1/8" ID SWEAT FOR 4-ROW COIL

COIL CONNECTION DIMENSIONS (INCHES)				
UNIT SIZE	K	L	M	N
C08-14 (3 ROW LH)	24-1/4	8-3/4	20-1/4	2-3/4
C08-14 (3 ROW RH)	19-1/8	4	25-1/2	7-1/2
C08-14 (4 ROW LH)	24-1/4	8-7/8	20-3/8	2-3/4
C08-14 (4 ROW RH)	19-1/8	4-1/8	25-1/2	7-1/2

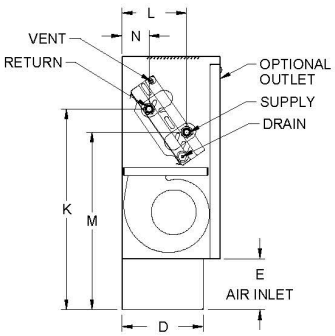

C02-06, 3 & 4 ROW LH UNIT

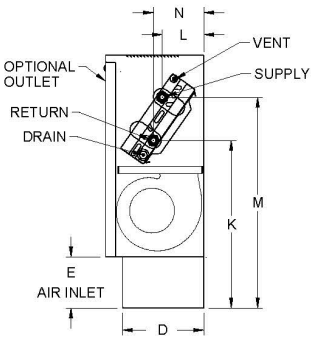

C02-06, 3 & 4 ROW RH UNIT

COIL CONNECTIONS:
SIZES 02-06: 7/8" ID SWEAT THREE OR FOUR ROW COIL

COIL CONNECTION DIMENSIONS (INCHES)				
UNIT SIZE	K	L	M	N
C02-06 (3 ROW LH)	20	6-1/2	17-3/4	2-3/4
C02-06 (3 ROW RH)	16-3/4	4-1/8	21	5
C02-06 (4 ROW LH)	20	6-1/2	17-3/4	2-3/4
C02-06 (4 ROW RH)	16 3/4	4 1/4	21	5

Figure 21.1 - Model CW - Duct Collars

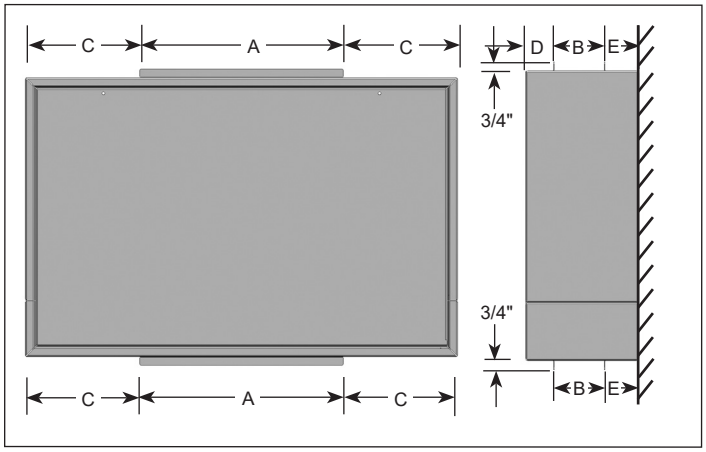

Table 21.1 - Model CW - 100% Air Inlet or Outlet Duct Collars ① ②

Unit Size	A	B	C	D	E
002	18-1/4	4-1/4	10-3/8	2-1/2	3
003	23-1/4	4-1/4	10-3/8	2-1/2	3
004	28-1/4	4-1/4	10-3/8	2-1/2	3
006	41-1/4	4-1/4	10-3/8	2-1/2	3
008	44-1/4	4-1/4	10-7/8	2-1/2	5-1/4
010	44-1/4	5-1/4	10-7/8	2-1/2	4-1/4
012	58-1/4	4-1/4	12-7/8	2-1/2	5-1/4
014	58-1/4	5-1/4	12-7/8	2-1/2	4-1/4

Figure 21.2 - Model C - Outside Air Duct Collar

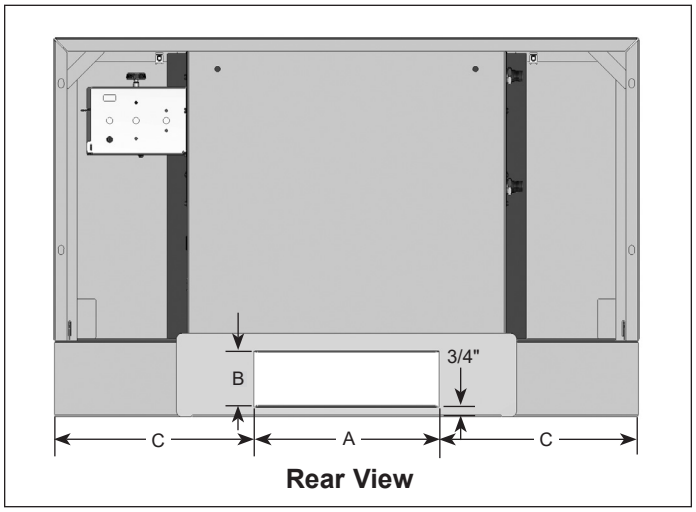

Table 21.2 - Model C - 25% and 100% Fresh Air Duct Collar ① ②

Nomen Digit 18	Outside Air Percentage					
	25%			100%		
	1, 3 or 6			2, 4 or 5		
Unit Size	A	B	C	A	B	C
002	12 1/4	3 1/2	13 1/4	18 1/2	4 1/4	10 1/8
003	12 1/4	3 1/2	15 3/4	23 1/2	4 1/4	10 1/8
004	12 1/4	3 1/2	18 1/4	28 1/2	4 1/4	10 1/8
006	12 1/4	3 1/2	24 3/4	41 1/2	4 1/4	10 1/8
008	24 1/4	3 1/2	23 3/4	44 1/2	4 1/4	13 5/8
010	24 1/4	3 1/2	23 3/4	44 1/2	5 1/4	13 5/8
012	24 1/4	3 1/2	29 3/4	58 1/2	4 1/4	12 5/8
014	24 1/4	3 1/2	29 3/4	58 1/2	5 1/4	12 5/8

① All dimensions are in inches.
② Includes 3/4" top and bottom duct flanges for duct connection.

Figure 21.3 - Model CW PermaLap Frame Dimensions (inches)

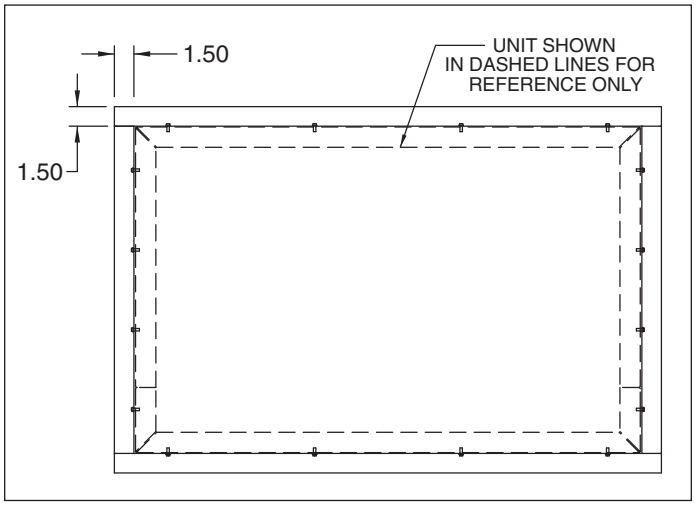

Table 22.1 - Unit Data Specifications

	Unit Size					
	002	003	004	006	008 & 010	012 & 014
Blower Wheel Quantity	1	1	2	2	3	4
Blower Wheel Diameter x Width	5-1/4 x 7	5-3/4 x 7	5-1/4 x 7	5-3/4 x 7	5-3/4 x 7	5-3/4 x 7
Standard PSC Motors						
Motor #1 HP	0.03		0.05		0.03	0.05
Motor #2 HP ①	n/a ①		n/a ①		0.05	0.05
Total Motor Amps	0.7		1.05		1.75	2.10
High Static PSC Motors						
Motor #1 HP	0.4		0.4		0.4	0.4
Motor #2 HP ①	n/a ①		n/a ①		0.4	0.4
Total Motor Amps	5.0		5.0		10.0	10.0
EC Motor						
Motor #1 HP	0.25				0.25	
Motor #2 HP ①	n/a		n/a		0.25	
Total Motor Amps	0.37				7.4	
Supply Voltage	115V/1ph/60Hz					

① Unit has only one motor.

* Amp values are maximum based on motor name plate.

Unit Mechanical Specifications

Cabinet

Floor models shall be provided with stamped louvers and a one inch high dust barrier at the bottom. The cabinet shall be 18-gauge steel with 16 gauge front panels. All painted surfaces shall be treated for corrosion resistance prior to being finished with a hammertone beige, baked on polyester powder coat finish. All unpainted steel shall be galvanized.
(When specified) color as selected by architect shall be provided in one of 8 optional colors as shown on manufacturer's color chart 75-403.

Wall or ceiling models shall have cabinets with stamped louvers. The entire bottom of the unit must be enclosed. Access to the speed control shall be through the easy access 16-gauge front panels.

(Available, when specified, as optional equipment) an access door shall be provided for speed control access.

All models shall have two 9" minimum wide piping end pockets. All wall and ceiling units shall have safety hinged access panels that can be easily removed during installation.

Coils

The heating coils shall provide specified capacities and not exceed the pressure drop and GPM listed in this catalog. The 1 & 2 row coils shall be suitable for 200 PSI working pressure with 240°F water or 10psi steam. The 3 & 4 row coils shall be suitable for 200 PSI working pressure with 200°F water.

Motor Speed Control

The unit shall have a unit-mounted solid state motor speed control, with high through low speeds and off positions on all models. For units with the EC motor option, a 3 speed switch with off position for motor control only will be provided.

Dampers (optional equipment)

When specified, the unit shall be equipped with a 25% galvanized steel fresh air blade damper. Model C, floor units only.

When dampers are specified, indicate one of the following:

1. These dampers shall be controlled from the end pocket with a manual control assembly that indicates the open and closed positions.

2. The damper shall be controlled by an electric, spring-return type motor, which will be energized when the blower motor is turned on thus moving the damper to the 25% or 100% position. It will be de-energized and close the damper when the blower motor is off.

Motors, Blowers and Drives

Blowers shall be of the centrifugal, forward curved type, to provide even air distribution and low sound level.
All units shall have permanent split capacitor (electronically communicated motor) available when specified as optional equipment) direct-drive motors. The motor and blower assembly shall be capable of being easily removed from the unit. Motors are built for continuous duty to NEMA standards.

Grilles (optional equipment)

When specified, aluminum linear bar inlet and/or outlet grilles shall be provided.

When specified, outlet may have two-way deflection louvers.

Filters

All air, both fresh and return, shall be filtered by a cleanable expanded aluminum filter.

THIS PAGE INTENTIONALLY LEFT BLANK

Products from Modine are designed to provide indoor air-comfort and ventilation solutions for residential, commercial, institutional and industrial applications. Whatever your heating, ventilating and air conditioning requirements, Modine has the product to satisfy your needs, including:

HVAC

- Unit Heaters:
  - Gas
  - Hydronic
  - Electric
  - Oil
- Ceiling Cassettes
- Duct Furnaces
- Hydronic Cabinet Unit Heaters, Convectors
- Infrared Heaters
- Make-up Air Systems
- Unit Ventilators

School Products

- Vertical Packaged Classroom HVAC:
  - DX Cooling/Heat Pump
  - Water/Ground Source Heat Pump
  - Horizontal/Vertical Unit Ventilators

Specific catalogs are available for each product. Catalogs 75-136 and 75-137 provide details on all Modine HVAC equipment.

Modine Manufacturing Company

1500 DeKoven Avenue
Racine, Wisconsin 53403-2552
Phone: 1.800.828.4328 (HEAT)
www.modinehvac.com

© Modine Manufacturing Company 2023