BRASS FITTINGS

BrassCraft®

THIS IS OUR CRAFT®

BRASS FITTINGS CATALOG

BrassCraft®

THE ONE GOOD NAME THE GREAT ONES DEPEND ON.

Every day, every job, the pro plumber's reputation is on the line. And, when high-quality parts are the difference between thinking it'll be fine and knowing it will, pros trust BrassCraft. We manufacture water stops, water connectors, gas supplies and drain cleaning tools that pros use with confidence to last for years. We're always working to make our products better — because they must be. For 75 years, everything we do is with the pro in mind.

BRASS FITTINGS

TABLE OF CONTENTS

Flare 6-12
Compression 13-19
CPVC 20
Iron Pipe 21-23
Hose Barb 24-25
Garden Hose 26-27
Drain & Shut-Off Cocks 28
Needle & Humidifier Valves 29
Displays 30
Specifications 31-38
Index 39-41

BrassCraft®

PROS WHO KNOW CHOOSE BRASSCRAFT.®

With our broad selection of products and configurations, BrassCraft has solutions pros need. And, most importantly, we stand behind our products and the pros who use them. Our products are made to stand up to the toughest jobs and scrutiny. They're built with pride and crafted with quality, for a job done right the first time.
Pros put their craft, customers and character first. For us, it's quality they can count on.

QUALITY BRASSCRAFT PRODUCTS TO FINISH THE JOB RIGHT

WATER STOPS

WATER CONNECTORS

GAS SUPPLIES

FITTINGS PROS CAN COUNT ON

Extruded Fittings

Extruded brass rod is drawn to custom shapes with precise tolerances. This eliminates splits, pin holes and sand holes. BrassCraft then machines the extruded brass rods using a variety of machining operations. The result is a one-piece, solid brass fitting without seams or brazed joints.

BrassCraft's process of machining fittings from extruded brass rod produces a fitting that's dense, nonporous and stronger in it's longitudinal direction.

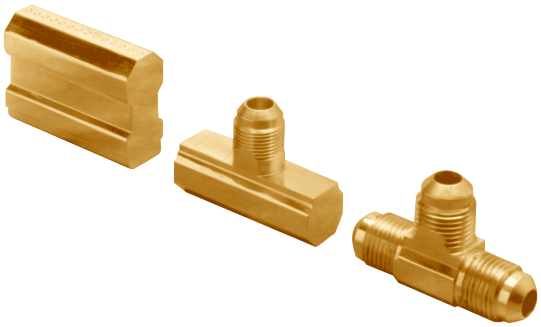

Forged Fittings

Forged brass fittings are made from extruded brass rod that have different temper and chemical composition than the brass rod used for the extruded fittings. The bars are cut to the correct length slug for the fitting, heated to a pliable state and pressed between dies with 25,000 pounds per square inch pressure. Next, they are cooled, then the flash is trimmed and the forging blank is machined into the finished fitting.

Dryseal Pipe Threads

BrassCraft® tapered pipe threads are made to the American National Standard B1.20.3, Dryseal Pipe Thread standard, known as either NPTF, or in the SAE short version, PTF.

Unlike other types of threads, dryseal pipe threads seal joints pressure-tight, because their thread roots are wider than the crests. Wrenching the threads together causes the roots to crush the sharper crests of the mating threads, forming a metal-to-metal seal. Dryseal threads improve sealing characteristics, but using a thread sealant is still recommended.

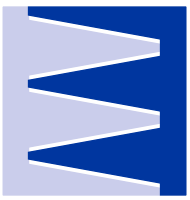

Dryseal pipe threads, hand tight. Does not provide a positive seal.

Regular pipe threads, hand tight. Only seals joints on the sides of the threads, allowing spiral leakage

Dryseal pipe threads, wrench tight. Tightly seals all thread surfaces, providing a positive seal.

BrassCraft®

Part Numbering System

Iron Pipe Nipples

Fitting Type	Pipe Thread	Length	Finish	Option
113	06	2.5	C	X

Type	112	Close Pipe Nipples*
	113	Long Pipe Nipples
Pipe Thread	02	1/8" Male Iron Pipe
	04	1/4" Male Iron Pipe
	06	3/8" Male Iron Pipe
	08	1/2" Male Iron Pipe
	10	5/8" Male Iron Pipe
	12	3/4" Male Iron Pipe
	16	1" Male Iron Pipe
Length*	1.5	1-1/2"
	2	2"
	2.5	2-1/2"
	3	3"
	3.5	3-1/2"
	4	4"
	4.5	4-1/2"
	5	5"
	5.5	5-1/2"
	6	6"
Finish	C	Chrome plated
	R	Rough (unplated)
Option (Modifier)	X	100% Compliant

*For Close Nipples, omit length

Industry Standard Fittings

Fitting Type	Inlet Size	Outlet Size	Option	Finish
69	8	6	X	C

Type	62	Compression x Compression Union
	65	Compression x Compression Elbow
	68	Male Iron Pipe x Compression Union
	69	Male Iron Pipe x Compression Elbow
	70	Female Iron Pipe x Compression Elbow
	462	Flare x Compression Adaptor
Inlet Size	4	1/4"
	6	3/8"
	8	1/2"
	10	5/8"
	12	3/4"
	14	7/8"
Outlet Size	4	1/4"
	6	3/8"
	8	1/2"
	10	5/8"
	12	3/4"
	14	7/8"
Option (Modifier)	DT	Drill Through
	X	100% Compliant
Finish	C	Chrome plated
	R	Rough (unplated)

Working Pressures

Working pressures vary by type and size of tubing used, and style of fitting. However, based on .032 wall copper tubing, the pressures may range as follows depending on size:

CONNECTION TYPE	WORKING PRESSURE
Flare (1/8" to 3/4")	600 to 3,000 PSI
Compression	100 to 400 PSI
Iron Pipe	Up to 1,200 PSI
PEX Tubing	Up to 150 PSI
Polyethylene Tubing	Up to 80 PSI

Fitting Thread Size Comparison Chart

SIZE	FLARE	COMPRESSION	PIPE
1/8	5/16-24	5/16-24	1/8-27
3/16	3/8-24	3/8-24	—
1/4	7/16-20	7/16-24	1/4-18
5/16	1/2-20	1/2-24	—
3/8	5/8-18	9/16-24	3/8-18
7/16	11/16-16	5/8-24	—
1/2	3/4-16	11/16-20	1/2-14
5/8	7/8-14	13/16-18	—
3/4	1-1/16-14	1-18	3/4-14
7/8	1-1/4-12	1-1/8-18	—
1	1-3/8-12	—	1-11-1/2

General Information

Most brass fittings have a temperature range of -65°F to 250°F. They can be used on copper, brass, aluminum, plastic, and welded steel.
Note: Compression fittings are not recommended for steel tubing.

Brass 45° Flare Fittings

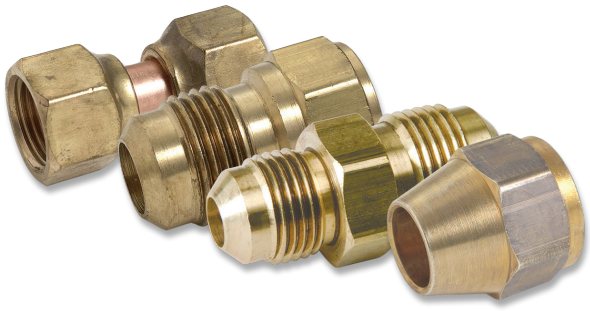

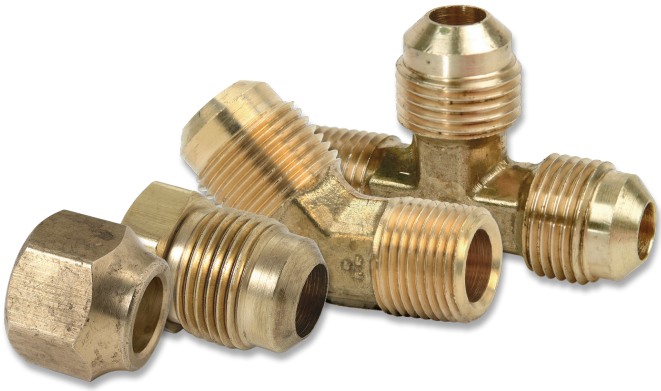

Product Applications

- For use with copper, brass, aluminum and welded steel tubing that can be flared.
- Used extensively for connections of fuel, oil, air, liquid petroleum (LP), and natural gas lines.

Product Advantages

- BrassCraft flare fittings resist mechanical pull out.
- Recommended for higher pressures than those covered by compression fittings.
- Designed to be assembled and disassembled over and over again.
- Reusable with long or short nuts.
- Manufactured from brass.
- Backed by BrassCraft's more than 75 year history and reputation for quality and service.

Special Orders

- Special fitting configurations and sizes may be ordered. Please furnish a print or sketch of your needs with your inquiry.
- Fittings are available in bulk quantities on request. Contact your sales representative for details.

How To Order

- Order fittings by part number and product name.
- Flare bodies and nuts are separate items and are ordered individually. (Indicate both part numbers – body and nut – when ordering).
- To order flare fittings with nuts assembled, add suffix"WN".

Assembly Instructions

1. Cut tubing to required length, making sure that the ends are square and all burrs are removed.
2. Slide nut onto tubing. Threaded end of nut must face out.
3. Flare tubing end with a 45° flaring tool.
   - **A.** Measure flare diameter.
   - **B.** Check flare for excessive thin out.
4. Lubricate threads with a drop of oil and assemble nut onto body, hand tighten.
5. Tighten with wrench until assembly feels “solid”. Then apply a one-sixth turn.

   CAUTION: Do not over torque. May damage the fitting and split the tubing at the flare.

HINT!

Single or Double Flares?

Tubing may be either single or double flared for maximum reliability. When working with steel tubing, such as Bundy, double flaring is recommended to protect against tube cracking or splitting. Single flares are commonly used to connect copper and aluminum tubing.

Double Flare Eliminates the Danger of Over Tightening

The advantage of a double flare is that an effective seal can be made with specified wrench torques, and yet maximum wrench torques for single flares can be exceeded by a considerable margin without “ironing out” or “washing out” the flare. The double flare compensates for this over-torquing while maintaining a reliable seal. The double flare is also desirable for tubing joints which must be taken apart and reassembled frequently, especially on 3/8” OD tube size or smaller.

Flare Plugs

PART NO.	USE	UPC	DESCRIPTION	FINISH	QTY	LBS
39-6	○	026613005690	3/8" OD Tube	Rough	10	0.5
39-8	○	026613005706	1/2" OD Tube	Rough	10	0.8
39-10	○	026613005713	5/8" OD Tube	Rough	10	1.3

Flare Caps

40-4	○	026613004914	1/4" OD Tube	Rough	5	0.1
40-6	○	026613004921	3/8" OD Tube	Rough	10	0.4
40-6X	▲	026613141077	3/8" OD Tube	Rough	10	0.4
40-8	○	026613004938	1/2" OD Tube	Rough	10	0.4
40-10	○	026613004945	5/8" OD Tube	Rough	5	0.6

Flare Nuts - Short

41S-4	○	026613004952	1/4" OD Tube	Rough	10	0.3
41S-6	○	026613004976	3/8" OD Tube	Rough	10	0.5
41S-8	○	026613004990	1/2" OD Tube	Rough	10	0.7
41S-10	○	026613005003	5/8" OD Tube	Rough	5	0.5
41S-12	○	026613058849	3/4" OD Tube	Rough	10	2.0
41S-14	○	026613058856	7/8" OD Tube	Rough	10	3.7
41S-6X	▲	026613058900	3/8" OD Tube, Heavy Pattern	Rough	10	0.6
41S-8X	▲	026613058955	1/2" OD Tube, Heavy Pattern	Rough	10	0.9

Flare Unions

42-4	○	026613005010	1/4" OD Tube, Both Ends	Rough	10	0.3
42-6	○	026613005034	3/8" OD Tube, Both Ends	Rough	10	0.8
42-8	○	026613005041	1/2" OD Tube, Both Ends	Rough	10	1.6
42-10	○	026613005058	5/8" OD Tube, Both Ends	Rough	5	1.0
42-14	○	026613060125	7/8" OD Tube, Both Ends	Rough	5	2.2

Flare Reducing Unions

42-6-4	○	026613005065	3/8" OD Tube x 1/4" OD Tube	Rough	10	0.6
42-8-6	○	026613005089	1/2" OD Tube x 3/8" OD Tube	Rough	10	1.1
42-10-8	○	026613005102	5/8" OD Tube x 1/2" OD Tube	Rough	5	0.9

Flare Female Adaptors

46-4-4	○	026613060255	1/4" OD Tube x 1/4" FIP	Rough	10	0.4
46-6-6	○	026613005225	3/8" OD Tube x 3/8" FIP	Rough	10	0.6
46-8-8	○	026613005270	1/2" OD Tube x 1/2" FIP	Rough	10	1.1

Flare Female Reducing Adaptors

46-4-2	○	026613005331	1/4" OD Tube x 1/8" FIP	Rough	10	0.4
46-4-8	○	026613060279	1/4" OD Tube x 1/2" FIP	Rough	10	1.0
46-6-12	○	026613005249	3/8" OD Tube x 3/4" FIP	Rough	10	0.9
46-6-8	○	026613005232	3/8" OD Tube x 1/2" FIP	Rough	10	0.9
46-8-12	○	026613005287	1/2" OD Tube x 3/4" FIP	Rough	10	1.3
46-8-6	○	026613005263	1/2" OD Tube x 3/8" FIP	Rough	10	0.9
46-10-8	○	026613005300	5/8" OD Tube x 1/2" FIP	Rough	10	1.1
46-10-12	○	026613005317	5/8" OD Tube x 3/4" FIP	Rough	10	1.3

○ Not for use in potable water applications.
▲ Certified Compliant to NSF/ANSI 372 for potable water applications

PART NO.	USE	UPC	DESCRIPTION	FINISH	QTY	LBS
Flare Male Adaptors						
48-4-4	○	026613005348	1/4" OD Tube x 1/4" MIP	Rough	10	0.4
48-6-6	○	026613005386	3/8" OD Tube x 3/8" MIP	Rough	10	0.7
48-8-8	○	026613005430	1/2" OD Tube x 1/2" MIP	Rough	10	1.1
48-12-12	○	026613060422	3/4" OD Tube x 3/4" MIP	Rough	5	1.3
Flare Male Reducing Adaptors						
48-4-2	○	026613060484	1/4" OD Tube x 1/8" MIP	Rough	10	0.2
48-4-6	○	026613060507	1/4" OD Tube x 3/8" MIP	Rough	10	0.6
48-4-8	○	026613060521	1/4" OD Tube x 1/2" MIP	Rough	10	1.0
48-6-2	○	026613005362	3/8" OD Tube x 1/8" MIP	Rough	10	0.6
48-6-4	○	026613005379	3/8" OD Tube x 1/4" MIP	Rough	10	0.7
48-6-8	○	026613005393	3/8" OD Tube x 1/2" MIP	Rough	10	1.1
48-6-12	○	026613005409	3/8" OD Tube x 3/4" MIP	Rough	10	1.7
48-8-4	○	026613005416	1/2" OD Tube x 1/4" MIP	Rough	10	1.0
48-8-6	○	026613005423	1/2" OD Tube x 3/8" MIP	Rough	10	1.1
48-8-12	○	026613005447	1/2" OD Tube x 3/4" MIP	Rough	10	1.7
48-10-8	○	026613005461	5/8" OD Tube x 1/2" MIP	Rough	5	0.7
48-10-12	○	026613005478	5/8" OD Tube x 3/4" MIP	Rough	10	1.8
48-14-12	○	026613005485	7/8" OD Tube x 3/4" MIP	Rough	5	2.0
Flare Female Reducing Elbows						
50-6-8	○	026613005591	3/8" OD Tube x 1/2" FIP	Rough	10	2.1
Flare Male Elbows						
49-4-4	○	026613005508	1/4" OD Tube x 1/4" MIP	Rough	10	0.7
49-6-6	○	026613005522	3/8" OD Tube x 3/8" MIP	Rough	10	1.4
49-8-8	○	026613005560	1/2" OD Tube x 1/2" MIP	Rough	10	2.4
Flare Male Reducing Elbows						
49-3-2	○	026613063690	3/16" OD Tube x 1/8" MIP	Rough	10	0.4
49-6-2	○	026613063737	3/8" OD Tube x 1/8" MIP	Rough	10	1.2
49-6-4	○	026613005515	3/8" OD Tube x 1/4" MIP	Rough	10	1.0
49-6-8	○	026613005539	3/8" OD Tube x 1/2" MIP	Rough	10	1.9
49-8-6	○	026613005553	1/2" OD Tube x 3/8" MIP	Rough	10	1.8
49-10-8	○	026613005577	5/8" OD Tube x 1/2" MIP	Rough	5	1.2
Flare Union Elbows						
55-6	○	026613005645	3/8" OD Tube, Both Ends	Rough	10	1.3
55-8	○	026613005652	1/2" OD Tube, Both Ends	Rough	10	2.0
55-10	○	026613005669	5/8" OD Tube, Both Ends	Rough	5	1.5
Flare Tees						
44-4	○	026613005126	1/4" OD Tube, All 3 Ends	Rough	10	0.7
44-6	○	026613005133	3/8" OD Tube, All 3 Ends	Rough	10	1.7
44-8	○	026613005140	1/2" OD Tube, All 3 Ends	Rough	10	2.8

○ Not for use in potable water applications.

Flare Tees (cont.)

PART NO.	USE	UPC	DESCRIPTION	FINISH	QTY	LBS
44-10	○	026613005157	5/8" OD Tube, All 3 Ends	Rough	5	1.9

Flare Reducing Tees

44-8-8-6	○	026613005171	1/2" OD Tube x 1/2" OD Tube x 3/8" OD Tube	Rough	10	2.4
44-10-10-8	○	026613063553	5/8" OD Tube x 5/8" OD Tube x 1/2" OD Tube	Rough	10	3.5

○ Not for use in potable water applications.

PART NO.	UPC	DESCRIPTION	FINISH	QTY	LBS
Flare Female Adaptors					
AU1-6-8S	026613106717	3/8" OD Flare x 1/2" FIP, Steel	Rough	25	2.8
AU1-8S	026613088532	1/2" OD Flare x 1/2" FIP, Steel	Rough	25	3.1
AU1-14-12	026613132846	7/8" OD Flare x 3/4" FIP, Brass	Rough	10	1.8
MAU1-10-8S	026613088570	5/8" OD Flare (15/16-16 Thread) x 1/2" FIP, Steel	Rough	25	4.2
MAU1-10-12S	026613082660	5/8" OD Flare (15/16-16 Thread) x 3/4" FIP, Steel	Rough	25	4.8
Flare Male Adaptors					
AU2-6-8S	026613106724	3/8" OD Flare x 1/2" MIP (3/8" FIP), Steel	Rough	25	3.2
AU2-8S	026613082646	1/2" OD Flare x 1/2" MIP (3/8" FIP), Steel	Rough	25	3.5
AU2-8-6S	026613053707	1/2" OD Flare x 3/8" MIP , Steel	Rough	10	1.1
AU2-8-12S	026613088563	1/2" OD Flare x 3/4" MIP (1/2" FIP), Steel	Rough	25	5.1
AU2-14-12	026613132860	7/8" OD Flare x 3/4" MIP (1/2" FIP), Brass	Rough	10	2.6
AU2-14-16	026613132877	7/8" OD Flare x 1" MIP (3/4" FIP), Brass	Rough	10	4.2
MAU2-10-8S	026613082684	5/8" OD Flare (15/16-16 Thread) x 1/2" MIP (3/8" FIP), Steel	Rough	25	4.8
MAU2-10-12S	026613082677	5/8" OD Flare (15/16-16 Thread) x 3/4" MIP (1/2" FIP), Steel	Rough	25	6.2
Flare Caps					
M40-10	026613052069	5/8" OD Flare (15/16-16 Thread), Brass	Rough	10	1.0
Gas Connector Nuts					
ASN-10	026613082387	5/8" OD Flare (15/16-16 Thread), Steel	Rough	25	2.7

Flare Refrigeration Nuts - Short

PART NO.	USE	UPC	DESCRIPTION	FINISH	QTY	LBS
141S-4	○	026613005720	1/4" OD Tube	Rough	10	0.4
141S-6	○	026613005737	3/8" OD Tube	Rough	10	0.6
141S-8	○	026613005744	1/2" OD Tube	Rough	10	0.8
141S-10	○	026613005751	5/8" OD Tube	Rough	10	1.2
141S-12	○	026613005768	3/4" OD Tube	Rough	10	2.4
141S-14	○	026613058702	7/8" OD Tube	Rough	5	2.1

Flare Refrigeration Reducing Nuts - Short

141S-8-6	○	026613005782	1/2" OD Tube x 3/8" OD Tube	Rough	10	0.8

Flare Female Elbows

150-6-6	○	026613063157	3/8" OD Tube x 3/8" FIP	Rough	10	0.8
150-8-8	○	026613063201	1/2" OD Tube x 1/2" FIP	Rough	10	2.5

Flare Female Reducing Elbows

150-8-12	○	026613063171	1/2" OD Tube x 3/4" FIP	Rough	10	2.1
150-10-12	○	026613063010	5/8" OD Tube x 3/4" FIP	Rough	10	2.3

Flare Male Elbows

149-6-6	○	026613062952	3/8" OD Tube x 3/8" MIP	Rough	10	1.3
149-8-8	○	026613063003	1/2" OD Tube x 1/2" MIP	Rough	10	1.4

Flare Male Reducing Elbows

149-4-2	○	026613062846	1/4" OD Tube x 1/8" MIP	Rough	10	0.4
149-8-12	○	026613062976	1/2" OD Tube x 3/4" MIP	Rough	10	2.1
149-10-8	○	026613062792	5/8" OD Tube x 1/2" MIP	Rough	5	1.0
149-10-12	○	026613062761	5/8" OD Tube x 3/4" MIP	Rough	5	1.5

Flare Union Elbows

155-6	○	026613063461	3/8" OD Tube, Both Ends	Rough	10	0.9
155-8	○	026613005676	1/2" OD Tube, Both Ends	Rough	10	1.4
155-10	○	026613063386	5/8" OD Tube, Both Ends	Rough	10	2.1

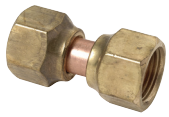

Swivel Flare Nut Connectors

114FSV-4	○	026613058597	1/4" OD Tube, Both Ends	Rough	10	1.0
114FSV-6	○	026613058610	3/8" OD Tube, Both Ends	Rough	10	1.3
114FSV-8	○	026613058627	1/2" OD Tube, Both Ends	Rough	10	1.8
114FSV-10	○	026613058580	5/8" OD Tube, Both Ends	Rough	5	1.3

Flare Tees

144-6	○	026613062563	3/8" OD Tube, All 3 Ends	Rough	10	1.2
144-8	○	026613062594	1/2" OD Tube, All 3 Ends	Rough	10	1.9
144-10	○	026613062433	5/8" OD Tube, All 3 Ends	Rough	10	3.0

○ Not for use in potable water applications.

Flare Male Tee Adaptors (MIP on Branch)

PART NO.	USE	UPC	DESCRIPTION	FINISH	QTY	LBS
145-6-6	○	026613005805	3/8" OD Tube x 3/8" OD Tube x 3/8" MIP	Rough	10	1.3
145-8-8	○	026613005829	1/2" OD Tube x 1/2" OD Tube x 1/2" MIP	Rough	10	2.3

○ Not for use in potable water applications.

Fine Thread Flare Caps

PART NO.	USE	UPC	DESCRIPTION	FINISH	QTY	LBS
FC-6	○	026613059037	3/8" OD Tube (9/16-24 Thread)	Rough	10	0.3

Fine Thread Flare Nuts

PART NO.	USE	UPC	DESCRIPTION	FINISH	QTY	LBS
F0-6	○	026613004785	3/8" OD Tube (9/16-24 Thread)	Rough	10	0.2

Fine Thread Flare Unions

PART NO.	USE	UPC	DESCRIPTION	FINISH	QTY	LBS
FU3-6	○	026613005119	3/8" OD Tube (9/16-24 Thread), Both Ends	Rough	10	0.5

Fine Thread Flare Female Adaptors

PART NO.	USE	UPC	DESCRIPTION	FINISH	QTY	LBS
F10-6	○	026613004792	3/8" OD Tube (9/16-24 Thread) x 3/8" FIP	Rough	10	0.5
F12-6-8	○	026613004808	3/8" OD Tube (9/16-24 Thread) x 1/2" FIP	Rough	10	0.7

Fine Thread Flare Male Adaptors

PART NO.	USE	UPC	DESCRIPTION	FINISH	QTY	LBS
FRC11-6	○	026613004761	3/8" OD Tube (9/16-24 Thread) x 3/8" MIP (Tapped 1/8" FIP)	Rough	10	0.6
FRC13-6-8	○	026613004778	3/8" OD Tube (9/16-24 Thread) x 1/2" MIP (Tapped 3/8" FIP)	Rough	10	0.8

○ Not for use in potable water applications.

Brass Compression Fittings

Product Applications

- For use with potable water, instrumentation, hydraulic and pneumatic systems.
- Designed to be used with aluminum, copper and plastic tubing. Not recommended for steel tubing. Plastic tubing requires 63PT insert and 60PT sleeve.

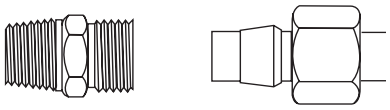

WARNING: Do not use compression fittings for gas connections of any kind.

Product Advantages

- BrassCraft compression fittings do not require any flaring, soldering or other type of tubing preparation.
- Available in a broad range of sizes and styles.
- Manufactured from brass.
- Backed by BrassCraft's 75 plus year history and reputation for quality and service.

Working Pressure Ranges

- Operating temperatures and tubing type are important factors. The following table (73˚ F temperature with copper tubing) is a good guide to use for proper selection.

PSI	Tube OD (IN)	Tube Wall (IN)
400	1/8	.030
400	3/16	.030
300	1/4	.030
300	5/16	.032
200	3/8	.032
200	1/2	.032
150	5/8	.035
100	3/4	.035
75	7/8	.035

How to Order

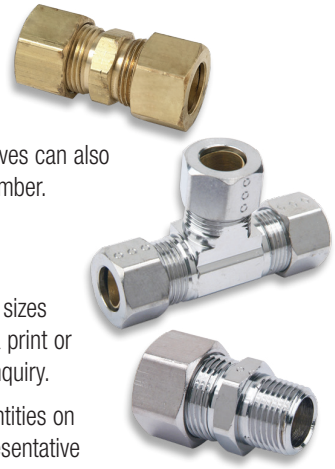

- Ordered as complete assemblies (body, nut, sleeve). Nuts and sleeves can also be ordered separately by part number.

Special Orders

- Special fitting configurations and sizes may be ordered. Please furnish a print or sketch of your needs with your inquiry.
- Fittings are available in bulk quantities on request. Contact your sales representative for details.

Assembly Instructions

1. **For use with type L or M copper only.**
   A drop of oil or thread sealant will make tightening easier. If using a drop of oil or thread sealant, be sure that threads are clean of any debris and that sealant is also free of any metal debris. DO NOT USE a "PUTTY" or gasket type material.
2. Cut tubing to required length.
3. Slide nut and then sleeve onto tubing. Threaded end of nut must face toward fitting.
4. Insert tubing into fitting body, making sure tubing is bottomed on fitting shoulder.
5. Assemble nut to fitting body, hand tighten.
6. Tighten with a wrench 1/2 turn after nut begins to take hold or bite.

PEX Tube Compression Connection

For PEX Tube 3/8" OD and smaller, use plastic compression sleeve.

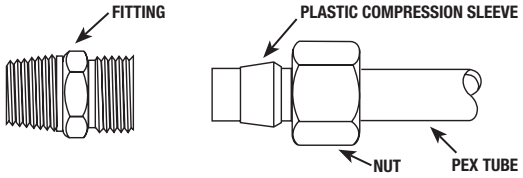

For PEX Tube larger than 3/8" OD, use brass compression sleeve with stainless steel tube insert.

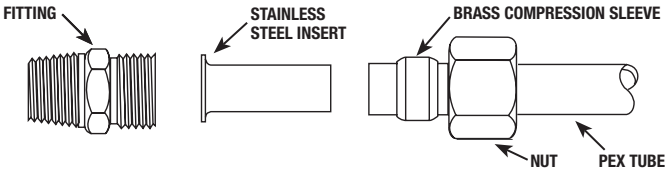

Compression Plugs

PART NO.	USE	UPC	DESCRIPTION	FINISH	QTY	LBS
CSP-4X	▲	026613149486	For 1/4" OD Tube	Rough	10	0.1
CSP-6X	▲	026613149509	For 3/8" OD Tube	Rough	10	0.1
CSP-8X	▲	026613149523	For 1/2" OD Tube	Rough	10	0.2

Compression Sleeves

PART NO.	USE	UPC	DESCRIPTION	FINISH	QTY	LBS
60-4	○	026613005928	For 1/4" OD Tube	Brass	10	.03
60-6	○	026613005942	For 3/8" OD Tube	Brass	10	.04
60-8	○	026613005966	For 1/2" OD Tube	Brass	10	0.1
60-10	○	026613005973	For 5/8" OD Tube	Brass	5	.04
60-14	○	026613005980	For 7/8" OD Tube	Brass	5	0.1

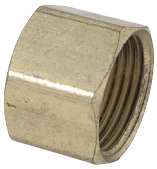

Compression Caps

PART NO.	USE	UPC	DESCRIPTION	FINISH	QTY	LBS
61CP-4X	▲	026613154411	1/4" OD Tube	Rough	10	0.1
61CP-6X	▲	026613154428	3/8" OD Tube	Rough	10	0.2
61CP-8X	▲	026613154435	1/2" OD Tube	Rough	10	0.4
61CP-10X	▲	026613154404	5/8" OD Tube	Rough	10	0.6

Compression Nuts

PART NO.	USE	UPC	DESCRIPTION	FINISH	QTY	LBS
61-4	●	026613006055	1/4" OD Tube	Rough	10	0.1
61-6	○	026613006079	3/8" OD Tube	Rough	10	0.2
61-7	○	026613066080	7/16" OD Tube	Rough	10	0.2
61-8	○	026613006086	1/2" OD Tube	Rough	10	0.4
61-10	●	026613006093	5/8" OD Tube	Rough	5	0.2
61-14	●	026613006109	7/8" OD Tube	Rough	5	0.4

Compression Unions

PART NO.	USE	UPC	DESCRIPTION	FINISH	QTY	LBS
62-4X	▲	026613135403	1/4" OD Tube, Both Ends	Rough	10	0.5
62-5X	▲	026613147840	5/16" OD Tube, Both Ends	Rough	10	0.7
62-6X	▲	026613136899	3/8" OD Tube, Both Ends	Rough	10	0.8
62-6X C	▲	026613147888	3/8" OD Tube, Both Ends	Chrome	10	0.8
62-6DTX	▲	026613147871	3/8" OD Tube, Drill Through (No Tube Stop), Both Ends	Rough	25	1.8
62-8X	▲	026613136905	1/2" OD Tube, Both Ends	Rough	10	1.3
62-10X	▲	026613136783	5/8" OD Tube, Both Ends	Rough	10	1.8
62-14X	▲	026613136806	7/8" OD Tube, Both Ends	Rough	10	3.1

Compression Reducing Unions

PART NO.	USE	UPC	DESCRIPTION	FINISH	QTY	LBS
62-4-2X	▲	026613170251	1/4" OD Tube x 1/8" OD Tube	Rough	10	0.4
62-6-4X	▲	026613135427	3/8" OD Tube x 1/4" OD Tube	Rough	10	0.7
62-8-6X	▲	026613136912	1/2" OD Tube x 3/8" OD Tube	Rough	10	1.1
62-10-6X	▲	026613136776	5/8" OD Tube x 3/8" OD Tube	Rough	10	1.4
62-10-8X	▲	026613147772	5/8" OD Tube x 1/2" OD Tube	Rough	5	0.9

Compression Female Adaptors

PART NO.	USE	UPC	DESCRIPTION	FINISH	QTY	LBS
10X C	▲	026613145266	3/8" OD Tube, Drill Through (No Tube Stop) x 3/8" FIP	Chrome	25	1.6

○ Not for use in potable water applications.
● Can be used in potable water applications.
▲ Certified Compliant to NSF/ANSI 372 for potable water applications

PART NO.	USE	UPC	DESCRIPTION	FINISH	QTY	LBS
Compression Female Adaptors (cont.)						
66-4-4X	▲	026613136226	1/4" OD Tube x 1/4" FIP	Rough	10	0.6
66-6-6X	▲	026613136202	3/8" OD Tube x 3/8" FIP	Rough	10	0.6
66-8-8X	▲	026613148274	1/2" OD Tube x 1/2" FIP	Rough	10	0.9
Compression Female Reducing Adaptors						
12X C	▲	026613146171	3/8" OD Tube, Drill Through (No Tube Stop) x 1/2" FIP	Chrome	25	1.8
66-4-2X	▲	026613148168	1/4" OD Tube x 1/8" FIP	Rough	10	0.4
66-4-6X	▲	026613148199	1/4" OD Tube x 3/8" FIP	Rough	10	0.5
66-4-8X	▲	026613148205	1/4" OD Tube x 1/2" FIP	Rough	10	0.7
66-6-2X	▲	026613137681	3/8" OD Tube x 1/8" FIP	Rough	10	0.5
66-6-4X	▲	026613148212	3/8" OD Tube x 1/4" FIP	Rough	10	0.6
66-6-8X	▲	026613136189	3/8" OD Tube x 1/2" FIP	Rough	10	0.7
66-8-6X	▲	026613148250	1/2" OD Tube x 3/8" FIP	Rough	10	0.8
66-10-6X	▲	026613148120	5/8" OD Tube x 3/8" FIP	Rough	5	0.6
66-10-8X	▲	026613135441	5/8" OD Tube x 1/2" FIP	Rough	5	0.7
66-10-12X	▲	026613148113	5/8" OD Tube x 3/4" FIP	Rough	5	0.9
66-14-12X	▲	026613148144	7/8" OD Tube x 3/4" FIP	Rough	5	1.3
Compression Male Adaptors						
11X R	▲	026613145297	3/8" OD Tube, Drill Through (No Tube Stop) x 3/8" MIP	Rough	25	1.7
11X C	▲	026613136172	3/8" OD Tube, Drill Through (No Tube Stop) x 3/8" MIP	Chrome	25	1.7
33X C	▲	026613147703	1/2" OD Tube, Drill Through (No Tube Stop) x 1/2" MIP	Chrome	25	3.0
68-2-2X	▲	026613148335	1/8" OD Tube x 1/8" MIP	Rough	10	0.3
68-4-4X	▲	026613136639	1/4" OD Tube x 1/4" MIP	Rough	10	0.5
68-6-6X	▲	026613136646	3/8" OD Tube x 3/8" MIP	Rough	10	0.7
68-6-6X C	▲	026613139043	3/8" OD Tube x 3/8" MIP	Chrome	10	0.7
68-8-8X	▲	026613135380	1/2" OD Tube x 1/2" MIP	Rough	10	1.2
68-8DTX	▲	026613148649	1/2" OD Tube, Drill Through (No Tube Stop) x 1/2" MIP	Rough	25	3.0
Compression Male Reducing Adaptors						
68-4-2X	▲	026613135533	1/4" OD Tube x 1/8" MIP	Rough	10	0.4
68-4-6X	▲	026613136585	1/4" OD Tube x 3/8" MIP	Rough	10	0.7
68-4-8X	▲	026613136608	1/4" OD Tube x 1/2" MIP	Rough	10	1.2
68-6-2X	▲	026613135564	3/8" OD Tube x 1/8" MIP	Rough	10	0.5
68-6-4X	▲	026613135526	3/8" OD Tube x 1/4" MIP	Rough	10	0.6
68-6-8X	▲	026613136615	3/8" OD Tube x 1/2" MIP	Rough	10	0.9
68-6-8X C	▲	026613139036	3/8" OD Tube x 1/2" MIP	Chrome	10	0.9
13X R	▲	026613136257	3/8" OD Tube, Drill Through (No Tube Stop) x 1/2" MIP	Rough	25	2.3
13X C	▲	026613136264	3/8" OD Tube, Drill Through (No Tube Stop) x 1/2" MIP	Chrome	25	2.3

▲ Certified Compliant to NSF/ANSI 372 for potable water applications

Compression Male Reducing Adaptors (cont.)

PART NO.	USE	UPC	DESCRIPTION	FINISH	QTY	LBS
68-6-12X	▲	026613148489	3/8" OD Tube x 3/4" MIP	Rough	10	2.0
68-8-4X	▲	026613148588	1/2" OD Tube x 1/4" MIP	Rough	10	0.9
68-8-6X	▲	026613136592	1/2" OD Tube x 3/8" MIP	Rough	10	1.0
68-8-12X	▲	026613148564	1/2" OD Tube x 3/4" MIP	Rough	10	1.6
68-10-6X	▲	026613159362	5/8" OD Tube x 3/8" MIP	Rough	10	1.3
68-10-8X	▲	026613136622	5/8" OD Tube x 1/2" MIP	Rough	10	1.3
68-10-12X	▲	026613135557	5/8" OD Tube x 3/4" MIP	Rough	10	1.8
68-14-8X	▲	026613148328	7/8" OD Tube x 1/2" MIP	Rough	10	1.9
68-14-12X	▲	026613135366	7/8" OD Tube x 3/4" MIP	Rough	10	2.4

Compression Union Elbows

65-4X	▲	026613148076	1/4" OD Tube, Both Ends	Rough	10	0.7
65-6X	▲	026613136394	3/8" OD Tube, Both Ends	Rough	10	1.0
65-6X C	▲	026613170268	3/8" OD Tube, Both Ends	Rough	10	1.0
65-8X	▲	026613148106	1/2" OD Tube, Both Ends	Rough	10	2.0
65-10X	▲	026613136301	5/8" OD Tube, Both Ends	Rough	10	2.3
65-14X	▲	026613148069	7/8" OD Tube, Both Ends	Rough	5	2.5

Compression Reducing Union Elbows

65-10-6X	▲	026613148045	5/8" OD Tube x 3/8" OD Tube	Rough	10	1.7
65-10-6X C	▲	026613148052	5/8" OD Tube x 3/8" OD Tube	Chrome	10	1.7

Compression Female Elbows

70-4-4X	▲	026613148779	1/4" OD Tube x 1/4" FIP	Rough	10	0.9
70-6-6X	▲	026613148793	3/8" OD Tube x 3/8" FIP	Rough	10	1.5

Compression Female Reducing Elbows

70-6-4X	▲	026613148786	3/8" OD Tube x 1/4" FIP	Rough	10	1.1
70-6-8X	▲	026613148809	3/8" OD Tube x 1/2" FIP	Rough	10	1.3
70-6-8X C	▲	026613148816	3/8" OD Tube x 1/2" FIP	Chrome	10	1.4

Compression Male Elbows

69-4-4X	▲	026613136424	1/4" OD Tube x 1/4" MIP	Rough	10	0.8
69-6-6X	▲	026613136325	3/8" OD Tube x 3/8" MIP	Rough	10	1.1
69-8-8X	▲	026613148748	1/2" OD Tube x 1/2" MIP	Rough	10	1.9

Compression Male Reducing Elbows

69-4-2X	▲	026613136431	1/4" OD Tube x 1/8" MIP	Rough	10	0.5
69-4-6X	▲	026613148663	1/4" OD Tube x 3/8" MIP	Rough	10	1.3
69-6-2X	▲	026613136455	3/8" OD Tube x 1/8" MIP	Rough	10	0.8
69-6-4X	▲	026613136349	3/8" OD Tube x 1/4" MIP	Rough	10	0.9
69-6-8X	▲	026613136479	3/8" OD Tube x 1/2" MIP	Rough	10	1.2
69-6-8X C	▲	026613148717	3/8" OD Tube x 1/2" MIP	Chrome	10	1.2
69-8-6X	▲	026613136493	1/2" OD Tube x 3/8" MIP	Rough	10	1.3

▲ Certified Compliant to NSF/ANSI 372 for potable water applications

PART NO.	USE	UPC	DESCRIPTION	FINISH	QTY	LBS
Compression Male Reducing Elbows (cont.)						
69-10-8X	▲	026613136516	5/8" OD Tube x 1/2" MIP	Rough	5	0.9

Compression Tees						
64-4X	▲	026613136684	1/4" OD Tube, All 3 Ends	Rough	10	0.9
64-6X	▲	026613136660	3/8" OD Tube, All 3 Ends	Rough	10	1.4
64-6X C	▲	026613147994	3/8" OD Tube, All 3 Ends	Chrome	10	1.4
64-8X	▲	026613148038	1/2" OD Tube, All 3 Ends	Rough	10	3.0
64-10X	▲	026613135311	5/8" OD Tube, All 3 Ends	Rough	10	2.9

Compression Reducing Tees						
64-6-6-4X	▲	026613148014	3/8" OD Tube x 3/8" OD Tube x 1/4" OD Tube	Rough	10	1.4

Compression Male Tee Adaptors (MIP on Branch)						
72-4-4X	▲	026613148885	1/4" OD Tube x 1/4" OD Tube x 1/4" MIP	Rough	10	1.1
72-6-6X	▲	026613148892	3/8" OD Tube x 3/8" OD Tube x 3/8" MIP	Rough	10	1.6

Flare Compression Adaptors						
462-6-4X	▲	026613154381	3/8" Female Flare, Fine Thread x 1/4" OD Tube	Rough	10	0.5
462-6-6X	▲	026613154398	3/8" Female Flare, Fine Thread x 3/8" OD Tube	Rough	10	0.5
462-8-6X	▲	026613155494	1/2" Female Flare, Fine Thread x 3/8" OD Tube	Rough	10	0.7

Sweat Compression Adaptors						
24X R	▲	026613147697	1/2" Nom Sweat x 1/4" OD Tube	Rough	25	1.2
14X R	▲	026613140698	1/2" Nom Sweat x 3/8" OD Tube, Drill Through (No Tube Stop)	Rough	25	1.5
14X C	▲	026613146850	1/2" Nom Sweat x 3/8" OD Tube, Drill Through (No Tube Stop)	Chrome	25	1.5

Compression Reducing Unions						
C14X C	▲	026613149066	5/8" OD Tube x 3/8" OD Tube, Drill Through (No Tube Stop)	Chrome	25	3.5

▲ Certified Compliant to NSF/ANSI 372 for potable water applications

Compression Sleeves for Plastic Tube

PART NO.	USE	UPC	DESCRIPTION	FINISH	QTY	LBS
60PT-4	○	026613005997	For 1/4" OD Tube	Plastic	10	.01
60PT-6	○	026613006017	For 3/8" OD Tube	Plastic	10	.01
60PT-8	▲	026613006024	For 1/2" OD Tube	Plastic	10	.02
60PT-10	○	026613006031	For 5/8" OD Tube	Plastic	10	.02

Brass Inserts for Nylon & Plastic Hose

PART NO.	USE	UPC	DESCRIPTION	FINISH	QTY	LBS
63PT-4X	▲	026613152868	For 1/4" OD Tube	Brass	10	.02
63PT-6X	▲	026613152875	For 3/8" OD Tube	Brass	10	0.1
63PT-8X	▲	026613147956	For 1/2" OD Tube	Brass	10	.04
63PT-10X	▲	026613152851	For 5/8" OD Tube	Brass	10	0.1

Compression Sleeves for Plastic Tube

PART NO.	USE	UPC	DESCRIPTION	FINISH	QTY	LBS
TS-8X	▲	026613097541	For 1/2" Nom Tube	Steel	10	0.1

○ Not for use in potable water applications.
▲ Certified Compliant to NSF/ANSI 372 for potable water applications

PART NO.	USE	UPC	DESCRIPTION	FINISH	QTY	LBS
Compression Female Tee Adaptors						
ST1-SS6X D	▲	026613140315	1/2" FIP Captive Nut x 1/2" MIPS x 3/8” OD Tube	Rough	5	1.1
CT2-664X P	▲	026613140933	3/8" OD Tube x 3/8" OD Tube x 1/4" Female Comp Nut	Rough	10	1.5
CT2-666X P	▲	026613140926	3/8" OD Tube x 3/8" OD Tube x 3/8" Female Comp Nut	Rough	10	1.5

▲ Certified Compliant to NSF/ANSI 372 for potable water applications

CPVC Compression Reducing Adaptors

PART NO.	USE	UPC	DESCRIPTION	FINISH	QTY	LBS
P14CX R	▲	026613154497	1/2" Nom CPVC x 3/8" OD Tube	Rough	10	1.5

CPVC Female 90° Drop-Ear Elbows

PART NO.	USE	UPC	DESCRIPTION	FINISH	QTY	LBS
P48W R	○	026613054841	1/2" Nom CPVC x 1/2" FIP	Rough	10	4.4

○ Not for use in potable water applications.
▲ Certified Compliant to NSF/ANSI 372 for potable water applications

Iron Pipe Fittings

Product Applications

- For use with brass, copper or iron pipe.
- Designed for low and medium pressure pipe line connections.
- Typically used in water, grease, fuels, LP and natural gas, refrigeration, instrumentation and hydraulic systems.

Product Advantages

- All pipe fitting threads meet the standards developed by the Society of Automotive Engineers (SAE).
- Connectors, unions, nuts and extruded elbows and tees manufactured from brass.
- Forged elbows and tees manufactured from brass.
- Backed by BrassCraft's 75 plus year history and reputation for quality and service.

How to Order

- Order fittings by part number and product name.
- To order with pre-applied pipe sealant, add a "V" suffix to part number. Example: 202-6V. "V" fittings special order only.

Special Orders

- Special fitting configurations and sizes may be ordered. Please furnish a print or sketch of your needs with your inquiry.
- Fittings are available in bulk quantities on request. Contact your sales representative for details.

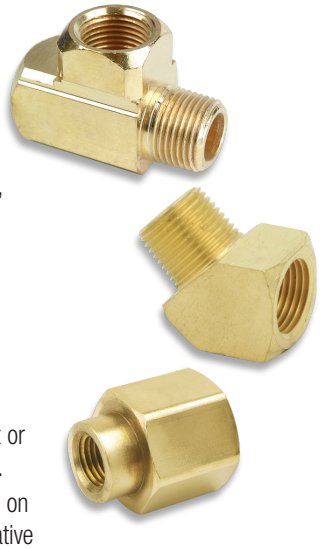

PART NO.	USE	UPC	DESCRIPTION	FINISH	QTY	LBS
Pipe Caps						
213-8	○	026613004464	1/2" FIP	Rough	10	0.8
Pipe Locknuts						
210-6	○	026613075754	3/8" FIP	Rough	10	0.4
Female Pipe Couplings						
207-8X	▲	026613147345	1/2" FIP, Both Ends	Rough	10	2.0
Pipe Reducer Couplings						
119-8-4X	▲	026613146157	1/2" FIP x 1/4" FIP	Rough	10	1.0
Pipe Adaptors						
120-8	○	026613075624	1/2" FIP x 1/2" MIP	Rough	10	1.0
120-8X	▲	026613146249	1/2" FIP x 1/2" MIP	Rough	25	5.2
120-8-4	○	026613075631	1/2" FIP x 1/4" MIP	Rough	10	1.5
120-8-4X	▲	026613146256	1/2" FIP x 1/4" MIP	Rough	10	1.8
120-8-6X	▲	026613146270	1/2" FIP x 3/8" MIP	Rough	25	3.2
120-12-8X	▲	026613146195	3/4" FIP x 1/2" MIP	Rough	10	3.3

○ Not for use in potable water applications.
▲ Certified Compliant to NSF/ANSI 372 for potable water applications

Pipe Reducer Bushings

PART NO.	USE	UPC	DESCRIPTION	FINISH	QTY	LBS
PRB-8-2X	▲	026613151366	1/2" MIP x 1/8" FIP	Rough	10	0.7
PRB-8-4X	▲	026613151373	1/2" MIP x 1/4" FIP	Rough	10	0.6
PRB-12-4X	▲	026613151267	3/4" MIP x 1/4" FIP	Rough	10	1.3
PRB-12-8	○	026613004105	3/4" MIP x 1/2" FIP	Rough	5	0.6
PRB-12-8X	▲	026613151281	3/4" MIP x 1/2" FIP	Rough	5	0.4

Male Pipe Sweat Adaptors

PSA-8X	▲	039166120444	1/2" MIP x 1/2" Nom Sweat	Rough	10	0.3
PSA-12X	▲	039166120420	3/4" MIP x 3/4" Nom Sweat	Rough	10	0.4
PSA-16X	▲	039166120437	1" MIP x 1" Nom Sweat	Rough	10	0.5

90° Female Pipe Elbows

200-2X	▲	026613146911	1/8" FIP, Both Ends	Rough	10	0.6
200-8X	▲	026613146997	1/2" FIP, Both Ends	Rough	10	3.2
200-12	○	026613004433	3/4" FIP, Both Ends	Rough	10	4.0

90° Street Elbows

202-2	○	026613006888	1/8" FIP x 1/8" MIP	Rough	10	0.5
202-4X	▲	026613147062	1/4" FIP x 1/4" MIP	Rough	10	1.2
202-8X	▲	026613147123	1/2" FIP x 1/2" MIP	Rough	10	3.1

Close Pipe Nipples

112-04-RX	▲	026613145310	1/4" MIP, Both Ends	Rough	25	0.7

Hex Pipe Nipples

PHN-2X	▲	026613150970	1/8" MIP, Both Ends	Rough	10	0.3
PHN-4X	▲	026613150994	1/4" MIP, Both Ends	Rough	10	0.4
PHN-4-2X	▲	026613151014	1/4" MIP x 1/8" MIP	Rough	10	0.4
PHN-6X	▲	026613151038	3/8" MIP, Both Ends	Rough	10	0.6
PHN-8	○	026613004334	1/2" MIP, Both Ends	Rough	10	1.5
PHN-8X	▲	026613151076	1/2" MIP, Both Ends	Rough	10	1.5
PHN-8-6X	▲	026613151113	1/2" MIP x 3/8" MIP	Rough	10	1.2
PHN-12X	▲	026613150956	3/4" MIP x 3/4" MIP	Rough	10	1.5

Pipe Nipples

113-04-1.5-RX	▲	026613145464	1/4" MIP x 1-1/2"	Rough	25	1.5
113-06-3-CX	▲	026613145600	3/8" MIP x 3"	Chrome	25	3.2
113-06-4-CX	▲	026613145679	3/8" MIP x 4"	Chrome	25	4.5
113-08-3-CX	▲	026613145822	1/2" MIP x 3"	Chrome	5	0.7
113-08-4-CX	▲	026613145891	1/2" MIP x 4"	Chrome	5	1.3
113-08-6-CX	▲	026613145976	1/2" MIP x 6"	Chrome	5	2.0

Pipe Tees

203-12	○	026613004419	3/4" FIP, All 3 Ends	Rough	10	5.3

○ Not for use in potable water applications.
▲ Certified Compliant to NSF/ANSI 372 for potable water applications

PART NO.	USE	UPC	DESCRIPTION	FINISH	QTY	LBS
Street Tees						
225-2X	▲	026613147550	1/8" FIP x 1/8" MIP x 1/8" FIP	Rough	10	0.7
225-4	○	026613075914	1/4" FIP x 1/4" MIP x 1/4" FIP	Rough	10	1.5

○ Not for use in potable water applications.
▲ Certified Compliant to NSF/ANSI 372 for potable water applications

Brass Hose Barb Fittings

Product Applications

- For use with plastic or rubber tubing. Installation requires hose clamp.

Product Advantages

- BrassCraft® Hose Barb Fittings are manufactured with dryseal pipe threads.
- Connectors, unions, nuts, elbows and tees machined from brass rod.
- Backed by BrassCraft's 75 plus year history and reputation for quality and service.

How to Order

- Order fittings by part number and product name.

Special Orders

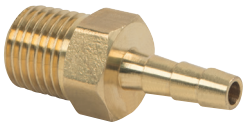

- Special fitting configurations and sizes may be ordered. Please furnish a print or sketch of your needs with your inquiry.
- Fittings are available in bulk quantities on request. Contact your sales representative for details.

Assembly Instructions

1. Cut hose cleanly and squarely to length.
2. Slide hose clamp onto hose end.
3. Lubricate hose with a drop of oil. Push hose onto fitting until hose reaches fitting stop ring or hex.
4. Move hose clamp over hose and barb. Tighten with screwdriver or wrench.

PART NO.	USE	UPC	DESCRIPTION	FINISH	QTY	LBS
Hose Barb Splicers						
73-4X	▲	026613148922	1/4" ID Hose Barb, Both Ends	Rough	25	0.5
Female Hose Barb Adaptors						
126-4-4X	▲	026613146690	1/4" ID Hose Barb x 1/4" FIP	Rough	25	1.0
Male Hose Barb Adaptors						
125-2-2X	▲	026613146416	1/8" ID Hose Barb x 1/8" MIP	Rough	25	0.5
125-4-4	○	026613003818	1/4" ID Hose Barb x 1/4" MIP	Rough	25	0.9
125-4-4X	▲	026613146492	1/4" ID Hose Barb x 1/4" MIP	Rough	25	0.9
125-4-8X	▲	026613146522	1/4" ID Hose Barb x 1/2" MIP	Rough	10	0.9
125-6-4	○	026613082394	3/8" ID Hose Barb x 1/4" MIP	Rough	25	1.1
125-6-4X	▲	026613146577	3/8" ID Hose Barb x 1/4" MIP	Rough	25	1.1
125-6-6	○	026613003825	3/8" ID Hose Barb x 3/8" MIP	Rough	25	1.6
125-6-6X	▲	026613146607	3/8" ID Hose Barb x 3/8" MIP	Rough	25	1.5
125-6-8	○	026613053738	3/8" ID Hose Barb x 1/2" MIP	Rough	25	2.5
125-6-8X	▲	026613146638	3/8" ID Hose Barb x 1/2" MIP	Rough	25	2.1
125-8-4X	▲	026613146645	1/2" ID Hose Barb x 1/4" MIP	Rough	25	1.4
125-8-6X	▲	026613146652	1/2" ID Hose Barb x 3/8" MIP	Rough	25	1.8
125-8-8	○	026613084688	1/2" ID Hose Barb x 1/2" MIP	Rough	25	2.7
125-8-8X	▲	026613146669	1/2" ID Hose Barb x 1/2" MIP	Rough	25	2.3
125-8-12	○	026613082509	1/2" ID Hose Barb x 3/4" MIP	Rough	25	3.7
125-10-8	○	026613082585	5/8" ID Hose Barb x 1/2" MIP	Rough	25	3.0
125-10-8X	▲	026613146331	5/8" ID Hose Barb x 1/2" MIP	Rough	25	2.9
125-12-8X	▲	026613146362	3/4" ID Hose Barb x 1/2" MIP	Rough	10	1.2

○ Not for use in potable water applications.
▲ Certified Compliant to NSF/ANSI 372 for potable water applications

PART NO.	USE	UPC	DESCRIPTION	FINISH	QTY	LBS
Male Hose Barb Adaptors (cont.)						
125-12-12X	▲	026613146355	3/4" ID Hose Barb x 3/4" MIP	Rough	10	1.9
125-16-12X	▲	026613146386	1" ID Hose Barb x 3/4" MIP	Rough	10	2.4
125-16-16X	▲	026613146393	1" ID Hose Barb x 1" MIP	Rough	10	3.3
90° Male Hose Barb Elbows						
129-4-2	○	026613085111	1/4" ID Hose Barb x 1/8" MIP	Rough	25	1.3
129-4-4X	▲	026613146775	1/4" ID Hose Barb x 1/4" MIP	Rough	25	1.4
129-6-2	○	026613085203	3/8" ID Hose Barb x 1/8" MIP	Rough	25	1.3
129-6-4	○	026613082424	3/8" ID Hose Barb x 1/4" MIP	Rough	25	1.4
Hose Barb Tees						
HBT2-6X	▲	026613149646	3/8" ID Hose Barb, All 3 Ends	Rough	25	1.5

○ Not for use in potable water applications.
▲ Certified Compliant to NSF/ANSI 372 for potable water applications

Brass Garden Hose Fittings

Product Applications

- For use with residential and commercial-grade garden hose.

Product Advantages

- Connectors, unions, nuts, elbows and tees manufactured from brass.
- Backed by BrassCraft's 75 plus year history and reputation for quality and service.

How to Order

- Order fittings by part number and product name.

Special Orders

- Special fitting configurations and sizes may be ordered. Please furnish a print or sketch of your needs with your inquiry.
- Fittings are available in bulk quantities on request. Contact your sales representative for details.

Assembly Instructions

- All female hose connections require a rubber washer inserted prior to installation.

PART NO.	USE	UPC	DESCRIPTION	FINISH	QTY	LBS
Garden Hose Dishwasher Elbows						
HES-6-12WNMX	▲	026613160214	3/4" Female Hose Thread x 3/8" OD Comp, Comp Nut & Sleeve, Hose Washer Included	Rough	50	9.8
HES-8-12X	▲	026613160221	3/4" Female Hose Thread x 1/2" OD Comp, Hose Washer Included	Rough	25	3.3

Garden Hose Caps with Washer						
HC-1	○	026613079752	3/4" Female Hose Thread	Rough	25	1.5
HC-1X	▲	026613136141	3/4" Female Hose Thread	Rough	25	1.5

Garden Hose Caps with 8" Chain & Washer						
HC-8	○	026613079769	3/4" Female Hose Thread	Rough	25	1.6

Female Swivel Hose Unions						
HUS-12	○	026613080024	3/4" Female Hose Thread, Both Ends	Rough	25	2.4

Male Hose Unions						
HU22-12MH	○	026613080000	3/4" Male Hose Thread, Both Ends	Rough	25	3.2
HU22-12MHX	▲	026613150000	3/4" Male Hose Thread, Both Ends	Rough	25	3.3

Male Hose Adaptors (FIP End)						
HU12-8-12	○	026613079868	3/4" Male Hose Thread x 1/2" FIP	Rough	25	3.0
HU12-8-12X	▲	026613149943	3/4" Male Hose Thread x 1/2" FIP	Rough	25	3.0
HU12-12-12	○	026613079851	3/4" Male Hose Thread x 3/4" FIP	Rough	25	2.2
HU12-12-12X	▲	026613149837	3/4" Male Hose Thread x 3/4" FIP	Rough	25	2.5

○ Not for use in potable water applications.
▲ Certified Compliant to NSF/ANSI 372 for potable water applications

PART NO.	USE	UPC	DESCRIPTION	FINISH	QTY	LBS
Male Hose Adaptors (MIP End)						
HU22-8-12	○	026613080017	3/4" Male Hose Thread x 1/2" MIP	Rough	25	3.2
HU22-8-12X	▲	026613135502	3/4" Male Hose Thread x 1/2" MIP	Rough	25	3.2
HU22-12-12	○	026613079981	3/4" Male Hose Thread x 3/4" MIP	Rough	25	3.4
HU22-12-12X	▲	026613135489	3/4" Male Hose Thread x 3/4" MIP	Rough	25	3.4
HU22-12-12TP	○	026613079998	3/4" Male Hose Thread x 3/4" MIP (Tapped 1/2" FIP)	Rough	25	3.9
HU22-12-12TPX	▲	026613149998	3/4" Male Hose Thread x 3/4" MIP (Tapped 1/2" FIP)	Rough	25	3.9
Female Hose Adaptors (FIP End)						
HU11-8-12	○	026613079844	3/4" Female Hose Thread x 1/2" FIP	Rough	25	3.0
HU11-8-12X	▲	026613149820	3/4" Female Hose Thread x 1/2" FIP	Rough	25	3.4
HU11-12-12	○	026613079837	3/4" Female Hose Thread x 3/4" FIP	Rough	25	2.2
HU11-12-12X	▲	026613149813	3/4" Female Hose Thread x 3/4" FIP	Rough	25	2.4
Female Hose Adaptors (MIP End)						
HU21-8-12	○	026613079974	3/4" Female Hose Thread x 1/2" MIP	Rough	25	2.6
HU21-8-12X	▲	026613149981	3/4" Female Hose Thread x 1/2" MIP	Rough	25	2.6
HU21-12-12	○	026613079967	3/4" Female Hose Thread x 3/4" MIP	Rough	25	2.9
HU21-12-12X	▲	026613149967	3/4" Female Hose Thread x 3/4" MIP	Rough	25	2.9
Female Swivel Hose Adaptors (FIP End)						
HUS11-8-12	○	026613080048	3/4" Female Hose Thread x 1/2" FIP	Rough	25	2.3
HUS11-12-12	○	026613080031	3/4" Female Hose Thread x 3/4" FIP	Rough	25	3.0
HUS11-12-12X	▲	026613137698	3/4" Female Hose Thread x 3/4" FIP	Rough	25	3.1
Female Hose Swivel Barbed Adaptors with Hex Nut & Washer						
HU126-12-12H	○	026613079936	3/4" Female Hose Thread x 3/4" ID Hose Barb	Rough	10	1.4
Male Hose Barbed Adaptors						
HU125-8-12	○	026613079899	3/4" Male Hose Thread x 1/2" ID Hose Barb	Rough	10	1.3
HU125-8-12X	▲	026613149875	3/4" Male Hose Thread x 1/2" ID Hose Barb	Rough	10	1.4
HU125-10-12	○	026613079875	3/4" Male Hose Thread x 5/8" ID Hose Barb	Rough	10	1.5
HU125-12-12	○	026613079882	3/4" Male Hose Thread x 3/4" ID Hose Barb	Rough	10	1.5
HU125-12-12X	▲	026613149868	3/4" Male Hose Thread x 3/4" ID Hose Barb	Rough	10	1.5
Y Hose Fittings						
Y-9	○	026613080055	3/4" Female Hose Thread x 3/4" Male Hose Thread x 3/4" Male Hose Thread	Rough	25	7.2

○ Not for use in potable water applications.
▲ Certified Compliant to NSF/ANSI 372 for potable water applications

Brass Drain & Shut-Off Cocks

Product Applications

- For use with low pressure air, water, gas and fluids (lubricant may not be compatible with some fluids).
- Backed by BrassCraft Manufacturing Company's 75 plus year history and reputation for quality and service.

How to Order

- Order valves and cocks by part number and product name.

Special Orders

- Special fitting configurations and sizes may be ordered. Please furnish a print or sketch of your needs with your inquiry.
- Fittings are available in bulk quantities on request. Contact your sales representative for details.

PART NO.	USE	UPC	DESCRIPTION	FINISH	QTY	LBS
45° Oil Tank Valves						
OVF45-6-8	○	026613078670	3/8" OD Flare x 1/2" MIP	Rough	10	2.7

Female Drain Cocks						
FF209-4	○	026613078274	1/4" FIP, Both Ends	Rough	25	5.0

Female Male Drain Cocks						
V402-2	○	026613078724	1/8" FIP x 1/8" MIP	Rough	10	1.3
V402-4	○	026613078731	1/4" FIP x 1/4" MIP	Rough	25	4.7

○ Not for use in potable water applications.

Brass Needle & Humidifier Valves

Product Applications

- For use on instrumentation, hydraulic and pneumatic systems.
- Designed for automotive or industrial use. Not intended for natural gas, LPG, nuclear or aircraft applications.

Product Advantages

- BrassCraft® Needle Valves have metal-to-metal seats with fine thread adjustment.
- Provide positive sealing and flow adjustment up to the capacity of the valve.
- Backed by BrassCraft's 75 plus year history and reputation for quality and service.

How to Order

- Order valves by part number and product name.

Special Orders

- Special fitting configurations and sizes may be ordered. Please furnish a print or sketch of your needs with your inquiry.
- Fittings are available in bulk quantities on request. Contact your sales representative for details.

Assembly Instructions

- Install with pressure against seat.
- Inspection of straight valve shows one opening is higher than the others.
- Pressure should always be directed against the seat in angle valves, not the stem threads.

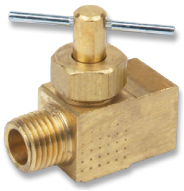

PART NO.	USE	UPC	DESCRIPTION	FINISH	QTY	LBS
Humidifier Valves - Ice Maker Kit						
NV104-EE1X K1	▲	026613153223	3/8" OD Tube x 3/8" OD Tube With 1/4" OD Tube	Rough	100	18.5
Compression Needle Valves						
NV105-4X	▲	026613137490	1/4" OD Tube x 1/4" OD Tube	Rough	25	2.2
NV105-6X	▲	026613137483	3/8" OD Tube x 3/8" OD Tube	Rough	25	3.1
NV104-4-2X	▲	026613150222	1/4" OD Tube x 1/8" MIP, Angle	Rough	25	1.7
Self-Piercing Needle Valve Kits						
PNEV-NCVX	▲	026613137476	For 3/8" to 1" OD Tube w/1/4" OD Comp , Inc. Saddle Clamp With Self-Locking Nuts, Brass Sleeve & Insert, & Delrin Sleeve	Rough	75	18.0
BC96X	▲	026613148977	For 3/8" to 1" OD Tube w/1/4" OD Comp Incl. Saddle Clamp With Self-Locking Nuts, 1/4" OD x 25' Polyethylene Tube, Brass Sleeve & Inserts & Delrin Sleeve, & 1/4" OD Union	Rough	5	4.0
BC97X	▲	026613148984	For 3/8" to 1" OD Tube w/1/4" OD Comp Incl. Saddle Clamp With Self-Locking Nuts, 1/4" OD x 25' Copper Tube, Brass Sleeve & 1/4" OD Union	Rough	5	10.3

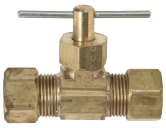

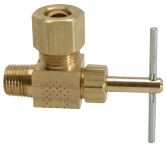

▲ Certified Compliant to NSF/ANSI 372 for potable water applications

Flare & Compression Fitting Cabinet

PART NO.	UPC	DESCRIPTION	FINISH	QTY	LBS
DC800		Brass Fittings Cabinet		1	17.5

Flare & Compression Fitting Labels

BCFBL1287		Fitting Cabinet Labels 11 Sheets Per Set		11	0.1

FLARE FITTINGS

Use: For use with fuel, oil, liquefied petroleum (LP), and natural gas lines. Designed for use with aluminum, copper, brass, and welded steel tubing that can be flared.

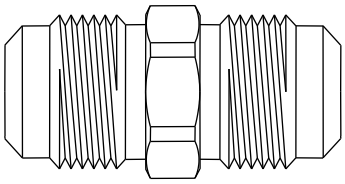

Design Features:

- **Recommended for higher pressures** than those covered by compression fittings
- **Resist mechanical pull out**
- **Available in a broad range of sizes**
- **100% no-lead product available**

Operating Specifications:

Temperature: -65°- 250° F at maximum operating pressures
Working Pressure: See chart below
Vibration: Good vibration resistance*

*Recommend long flare nuts when greater vibration resistance is required

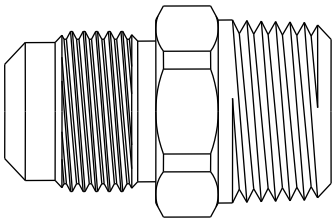

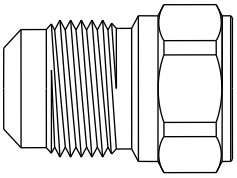

Standard Product

MATERIAL SPECIFICATIONS	
Fitting Body	*Brass*

Low-lead Product

MATERIAL SPECIFICATIONS	
Fitting Body	*Low-lead brass*

MAXIMUM WORKING PRESSURES

Service Conditions	Tube OD	Type of Tubing and Wall Thickness (Inches)									
		Copper – Dead Soft (Seamless)					Copper – Half Hard (Seamless)				
		.030”	.032”	.035”	.049”	.065”	.032”	.035”	.042”	.049”	.065”
Safety Factor 4-1	1/8	4300		5000			5000				
	3/16	2850		3300			3400				
	1/4	2100	2250	2500			2500				
	5/16		1800	2000			2000				
	3/8		1500	1650			1700	1850			
	1/2		1100	1250		2000	1250	1400			2600
	5/8			1000	1400	1800	1000			1500	2000
	3/4			850	1150	1500			1100		1700
	7/8									1100	1500
Safety Factor 6-1	1/8	2800		3350			3400				
	3/16	1900		2200			2250				
	1/4	1430	1500	1650			1700				
	5/16		1200	1300			1350				
	3/8		100	1100			1100	1200			
	1/2		750	825		1550	850	925			1750
	5/8			650	930	1200	675			1000	1350
	3/4			550	775	1000			725		1100
	7/8									750	1000

GAS FITTINGS

Use: For use with natural, manufactured, mixed, liquefied petroleum gases, and LP gas-air mixtures.

Design Features:

- **One-piece body** provides strength, durability, and long-lasting performance
- **Manufactured with** dryseal pipe threads

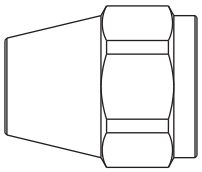

Operating Specifications:

Temperature: -40° - 150° F

Pressure: 1/2 PSI maximum

FITTING MATERIAL SPECIFICATIONS	
Brass Fitting	*Brass*
Steel Fitting	*Plated steel*

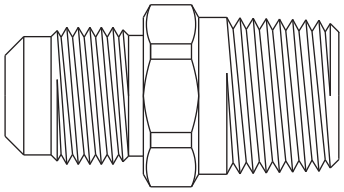

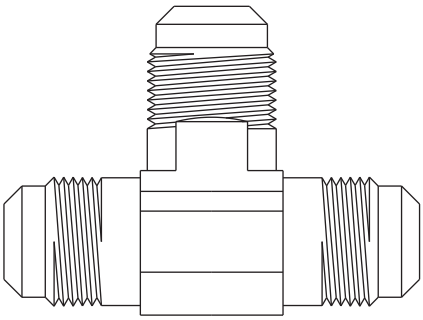

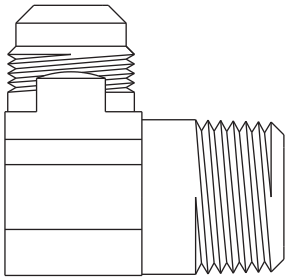

Listings & Certifications:

- For use with CSA listed ANSI Z21.24 / CSA 6.10 connectors
- For use with CSA listed ANSI Z21.75 / CSA 6.27 connectors

COMPRESSION FITTINGS

Use: For use with potable water, instrumentation, hydraulic, and pneumatic systems. Designed for use with aluminum, copper, and plastic tubing. Not intended for use with steel tubing.

* Plastic tubing requires a plastic insert and sleeve (see 60PT & 63PT).

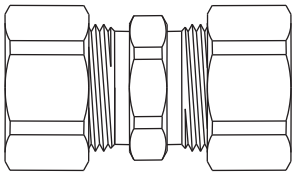

Design Features:

- **Little to no tube preparation.** Compression fittings do not require flaring, soldering, or other types of tube preparation
- **Available in** a broad range of sizes
- **Low-lead** product available

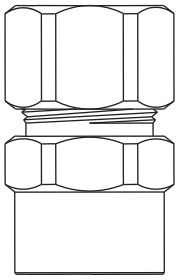

Operating Specifications:

Temperature: -65° - 250° F at maximum operating pressures
Working Pressure: See chart below
Vibration: Fair vibration resistance

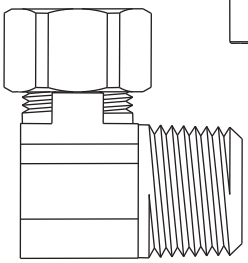

WORKING PRESSURE		
PSI	Tube OD	Tube Wall (Inches)
400	1/8	0.030
400	3/16	0.030
300	1/4	0.030
300	5/16	0.032
200	3/8	0.032
200	1/2	0.032
150	5/8	0.035
100	3/4	0.035
75	7/8	0.035

Standard Product

FITTING MATERIAL SPECIFICATIONS	
Fitting Body	*Brass*
Compression Sleeve	*Brass*
Compression Nut	*Brass*
Option	*Chrome plating*

Low-lead Product

FITTING MATERIAL SPECIFICATIONS	
Fitting Body	*Low-lead brass*
Compression Sleeve	*Brass*
Compression Nut	*Brass*

FITTINGS – BRASS CPVC TRANSITION

Use: For use with water, grease, fuels, LP and natural gas, refrigeration, instrumentation, and hydraulic systems in low and medium pressure pipe line connections. Use in combination with brass, copper, and iron pipe.

Design Features:

- **Designed and manufactured** to SAE (Society of Automotive Engineers) thread standards
- **Available in** a broad range of sizes
- **Low-lead** product available

Operating Specifications:

Temperature: See Catalog
Working Pressure: Up to 400 PSI – See Catalog
Vibration: Fair resistance to vibration and pipe movement depending on conditions

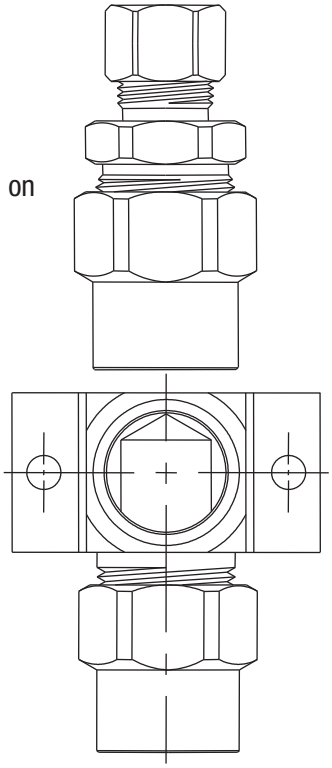

Standard Product

FITTING MATERIAL SPECIFICATIONS	
Fitting Body	*Brass*
CPVC Insert	*CPVC*
CPVC Washer	*Rubber*
CPVC Nut	*Brass*
Compression Sleeve	*Brass*
Compression Nut	*Brass*

Low-lead Product

FITTING MATERIAL SPECIFICATIONS	
Fitting Body	*Low-lead brass*
CPVC Insert	*CPVC*
CPVC Washer	*Rubber*
CPVC Nut	*Brass*
Compression Sleeve	*Brass*
Compression Nut	*Brass*

IRON PIPE FITTINGS

Use: For use with water, grease, fuels, LP and natural gas, refrigeration, instrumentation, and hydraulic systems in low and medium pressure pipe line connections. Use in combination with brass, copper and iron pipe.

Design Features:

- **Designed and manufactured to SAE** (Society of Automotive Engineers) thread standards
- **Available in a broad range of sizes**
- **Low-lead product available**

Operating Specifications:

Temperature: -65° - 250° F
Working Pressure: 1200 PSI maximum
Vibration: Fair resistance to vibration and pipe movement depending on conditions

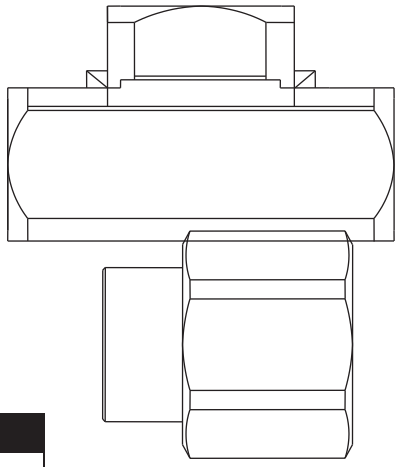

Standard Product

MATERIAL SPECIFICATIONS	
Machined Body	*Brass*
Forged Body	*Brass*

Low-lead Product

MATERIAL SPECIFICATIONS	
Machined Body	*Low-lead brass*
Forged Body	*Low-lead brass*

HOSE BARB FITTINGS

Use: For use with plastic or rubber tubing. Installation requires a hose clamp.

Design Features:

- **Manufactured with dryseal pipe threads**
- **Available in a broad range of sizes**, with swivel flare
- **Low-lead product available**

Operating Specifications:

Temperature: -40° - 160° F
Working Pressure: 150 PSI maximum

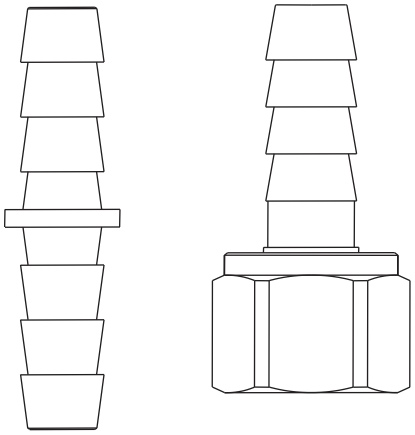

Standard Product

MATERIAL SPECIFICATIONS	
Fitting body	*Brass*
Nut (if applicable)	*Brass*

Low-lead Product

MATERIAL SPECIFICATIONS	
Fitting body	*Low-lead brass*
Nut (if applicable)	*Brass*

NIPPLES – BRASS PIPE

Use: For use with water, grease, fuels, LP and natural gas, refrigeration, instrumentation, and hydraulic systems in low and medium pressure pipe line connections. Use in combination with brass, copper, and iron pipe.

Design Features:

- **Designed and manufactured** to SAE (Society of Automotive Engineers) thread standards
- **Available** in a broad range of sizes
- **Low-lead** product available

Operating Specifications:

Temperature:	-65°- 250° F
Working Pressure:	Up to 1200 PSI
Vibration:	Fair resistance to vibration and pipe movement depending on conditions

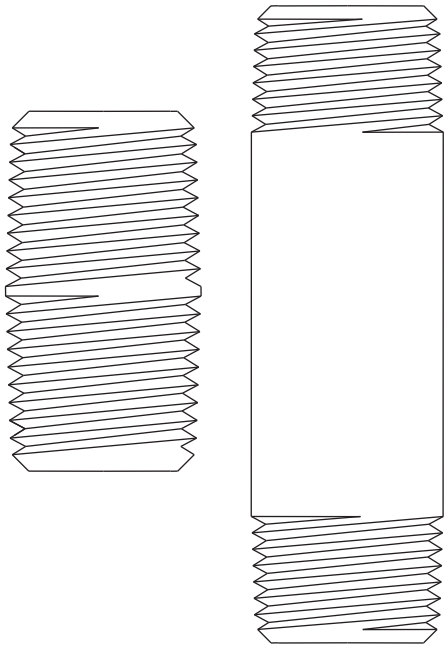

NIPPLE MATERIAL SPECIFICATIONS	
Nipple	*Yellow or low-lead brass*

GARDEN HOSE FITTINGS

Use: For use with residential and commercial grade garden hose. All female hose thread connections require a rubber washer inserted prior to installation.

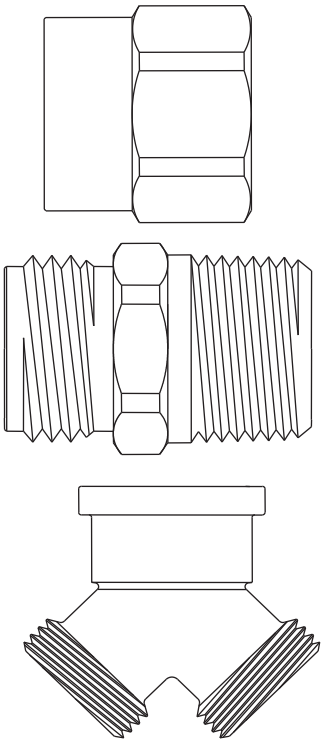

Design Features:

- **Available in** a broad range of configurations
- **Low-lead** product available

Operating Specifications:

Temperature: -35° - 100°F at maximum operating pressures
Working Pressure: 75 PSI maximum, intermittent to 150 PSI

Standard Product

FITTING MATERIAL SPECIFICATIONS	
Fitting Body	*Brass*
Hose Washer	*Rubber*

Low-lead Product

FITTING MATERIAL SPECIFICATIONS	
Fitting Body	*Low-lead brass*
Hose Washer	*Rubber*

DRAIN COCKS

Use: For use with low pressure air, water, gas, and fluids (lubricant may not be compatible with some fluids)

Design Features:

- **Forged one-piece, brass body** provides strength, durability, and long-lasting performance
- **Brass handle** provides a secure grip and smooth on/off operation
- **Manufactured with dryseal pipe threads**

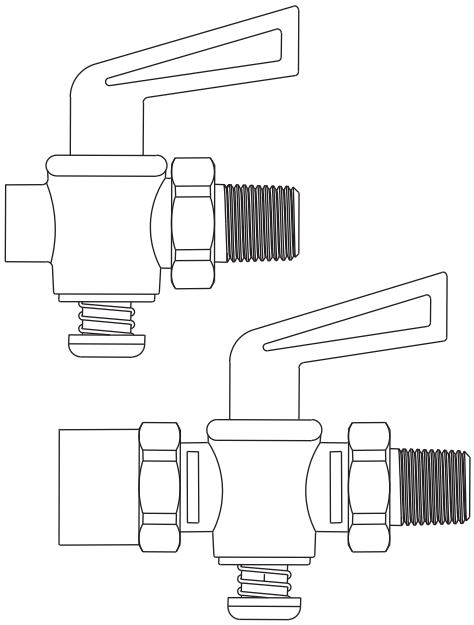

Operating Specifications:

Temperature: 32° - 125° F

Working Pressure: 60 PSI

Standard Product

MATERIAL SPECIFICATIONS	
Valve Body	*Brass*
Handle/Stem	*Brass*
Handle Screw	*Steel*
Spring	*Steel*
Washer	*Steel*

NEEDLE & HUMIDIFIER VALVES

Use: For use with automotive and industrial applications for instrumentation, hydraulic and pneumatic systems. Not intended for use with natural gas, LPG (liquefied petroleum gas or propane), nuclear, or avionic (aircraft) applications

Design Features:

- **Positive sealing and flow adjustment** up to the capacity of the valve
- **Metal-to-metal seats** with a fine thread engagement

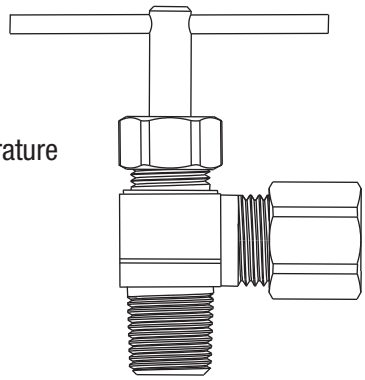

Operating Specifications:

Temperature: 40° - 140° F, 115° F maximum continuous use temperature

Working Pressure: 125 PSI maximum

Standard Product

MATERIAL SPECIFICATIONS	
Valve Body	*Brass*
Stem	*Brass*
Handle	*Steel*
Nut	*Brass*
Rubber Washer	*Rubber*
Compression Ring	*Brass*

Listings & Certifications:

- IAPMO listed to ASME A112.18.1 / CSA B125.1

PART NO.	PAGE
10X C	14
112-04-RX	22
113-04-1.5-RX	22
113-06-3-CX	22
113-06-4-CX	22
113-08-3-CX	22
113-08-4-CX	22
113-08-6-CX	22
114FSV-10	10
114FSV-4	10
114FSV-6	10
114FSV-8	10
119-8-4X	21
11X C	15
11X R	15
120-12-8X	21
120-8	21
120-8-4	21
120-8-4X	21
120-8-6X	21
120-8X	21
125-10-8	24
125-10-8X	24
125-12-12X	25
125-12-8X	24
125-16-12X	25
125-16-16X	25
125-2-2X	24
125-4-4	24
125-4-4X	24
125-4-8X	24
125-6-4	24
125-6-4X	24
125-6-6	24
125-6-6X	24
125-6-8	24
125-6-8X	24
125-8-12	24
125-8-4X	24
125-8-6X	24
125-8-8	24
125-8-8X	24
126-4-4X	24
129-4-2	25
129-4-4X	25
129-6-2	25

PART NO.	PAGE
129-6-4	25
12X C	15
13X C	15
13X R	15
141S-10	10
141S-12	10
141S-14	10
141S-4	10
141S-6	10
141S-8	10
141S-8-6	10
144-10	10
144-6	10
144-8	10
145-6-6	11
145-8-8	11
149-10-12	10
149-10-8	10
149-4-2	10
149-6-6	10
149-8-12	10
149-8-8	10
14X C	17
14X R	17
150-10-12	10
150-6-6	10
150-8-12	10
150-8-8	10
155-10	10
155-6	10
155-8	10
200-12	22
200-2X	22
200-8X	22
202-2	22
202-4X	22
202-8X	22
203-12	22
207-8X	21
210-6	21
213-8	21
225-2X	23
225-4	23
24X R	17
33X C	15
39-10	6

PART NO.	PAGE
39-6	6
39-8	6
40-10	6
40-4	6
40-6	6
40-6X	6
40-8	6
41S-10	6
41S-12	6
41S-14	6
41S-4	6
41S-6	6
41S-6X	6
41S-8	6
41S-8X	6
42-10	6
42-10-8	6
42-14	6
42-4	6
42-6	6
42-6-4	6
42-8	6
42-8-6	6
44-10	8
44-10-10-8	8
44-4	7
44-6	7
44-8	7
44-8-8-6	8
46-10-12	6
46-10-8	6
462-6-4X	17
462-6-6X	17
462-8-6X	17
46-4-2	6
46-4-4	6
46-4-8	6
46-6-12	6
46-6-6	6
46-6-8	6
46-8-12	6
46-8-6	6
46-8-8	6
48-10-12	7
48-10-8	7
48-12-12	7

PART NO.	PAGE
48-14-12	7
48-4-2	7
48-4-4	7
48-4-6	7
48-4-8	7
48-6-12	7
48-6-2	7
48-6-4	7
48-6-6	7
48-6-8	7
48-8-12	7
48-8-4	7
48-8-6	7
48-8-8	7
49-10-8	7
49-3-2	7
49-4-4	7
49-6-2	7
49-6-4	7
49-6-6	7
49-6-8	7
49-8-6	7
49-8-8	7
50-6-8	7
55-10	7
55-6	7
55-8	7
60-10	14
60-14	14
60-4	14
60-6	14
60-8	14
60PT-10	18
60PT-4	18
60PT-6	18
60PT-8	18
61-10	14
61-14	14
61-4	14
61-6	14
61-7	14
61-8	14
61CP-10X	14
61CP-4X	14
61CP-6X	14
61CP-8X	14

PART NO.	PAGE
62-10-6X	14
62-10-8X	14
62-10X	14
62-14X	14
62-4-2X	14
62-4X	14
62-5X	14
62-6-4X	14
62-6DTX	14
62-6X	14
62-6X C	14
62-8-6X	14
62-8X	14
63PT-10X	18
63PT-4X	18
63PT-6X	18
63PT-8X	18
64-10X	17
64-4X	17
64-6-6-4X	17
64-6X	17
64-6X C	17
64-8X	17
65-10-6X	16
65-10-6X C	16
65-10X	16
65-14X	16
65-4X	16
65-6X	16
65-6X C	16
65-8X	16
66-10-12X	15
66-10-6X	15
66-10-8X	15
66-14-12X	15
66-4-2X	15
66-4-4X	15
66-4-6X	15
66-4-8X	15
66-6-2X	15
66-6-4X	15
66-6-6X	15
66-6-8X	15
66-8-6X	15
66-8-8X	15
68-10-12X	16

PART NO.	PAGE
68-10-6X	16
68-10-8X	16
68-14-12X	16
68-14-8X	16
68-2-2X	15
68-4-2X	15
68-4-4X	15
68-4-6X	15
68-4-8X	15
68-6-12X	16
68-6-2X	15
68-6-4X	15
68-6-6X	15
68-6-6X C	15
68-6-8X	15
68-6-8X C	15
68-8-12X	16
68-8-4X	16
68-8-6X	16
68-8-8X	15
68-8DTX	15
69-10-8X	17
69-4-2X	16
69-4-4X	16
69-4-6X	16
69-6-2X	16
69-6-4X	16
69-6-6X	16
69-6-8X	16
69-6-8X C	16
69-8-6X	16
69-8-8X	16
70-4-4X	16
70-6-4X	16
70-6-6X	16
70-6-8X	16
70-6-8X C	16
72-4-4X	17
72-6-6X	17
73-4X	24
ASN-10	9
AU1-14-12	9
AU1-6-8S	9
AU1-8S	9
AU2-14-12	9
AU2-14-16	9

PART NO.	PAGE
AU2-6-8S	9
AU2-8-12S	9
AU2-8-6S	9
AU2-8S	9
BC96X	29
BC97X	29
BCFBL1287	30
C14X C	17
CSP-4X	14
CSP-6X	14
CSP-8X	14
CT2-664X P	19
CT2-666X P	19
DC800	30
F0-6	12
F10-6	12
F12-6-8	12
FC-6	12
FF209-4	28
FRC11-6	12
FRC13-6-8	12
FU3-6	12
HBT2-6X	25
HC-1	26
HC-1X	26
HC-8	26
HES-6-12WNMX	26
HES-8-12X	26
HU11-12-12	27
HU11-12-12X	27
HU11-8-12	27
HU11-8-12X	27
HU12-12-12	26
HU12-12-12X	26
HU125-10-12	27
HU125-12-12	27
HU125-12-12X	27
HU125-8-12	27
HU125-8-12X	27
HU126-12-12H	27
HU12-8-12	26
HU12-8-12X	26
HU21-12-12	27
HU21-12-12X	27
HU21-8-12	27
HU21-8-12X	27

PART NO.	PAGE
HU22-12-12	27
HU22-12-12TP	27
HU22-12-12TPX	27
HU22-12-12X	27
HU22-12MH	26
HU22-12MHX	26
HU22-8-12	27
HU22-8-12X	27
HUS11-12-12	27
HUS11-12-12X	27
HUS11-8-12	27
HUS-12	26
M40-10	9
MAU1-10-12S	9
MAU1-10-8S	9
MAU2-10-12S	9
MAU2-10-8S	9
NV104-4-2X	29
NV104-EE1X K1	29
NV105-4X	29
NV105-6X	29
OVF45-6-8	28
P14CX R	20
P48W R	20
PHN-12X	22
PHN-2X	22
PHN-4-2X	22
PHN-4X	22
PHN-6X	22
PHN-8	22
PHN-8-6X	22
PHN-8X	22
PNEV-NCVX	29
PRB-12-4X	22
PRB-12-8	22
PRB-12-8X	22
PRB-8-2X	22
PRB-8-4X	22
PSA-12X	22
PSA-16X	22
PSA-8X	22
ST1-SS6X D	19
TS-8X	18
V402-2	28
V402-4	28
Y-9	27

PART NO.	PAGE

BrassCraft®

BrassCraft Manufacturing Co.
39600 Orchard Hill Place
Novi, Michigan 48375-5331
TOLL-FREE: (877) 272-7755
FAX: (248) 305-6011

©2021 BrassCraft Manufacturing Company

www.brasscraft.com

BC-0302 9/21