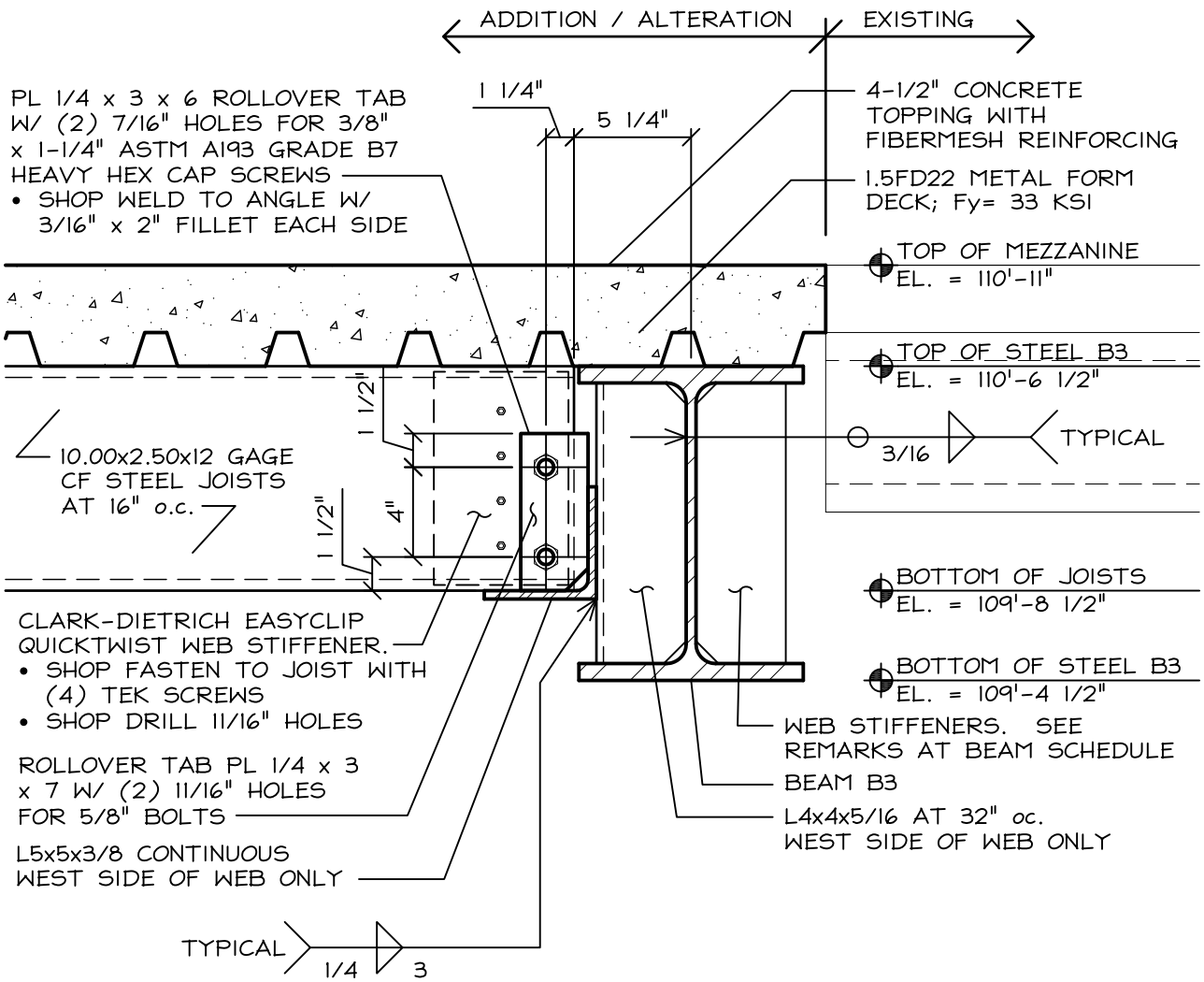

1 STEEL DETAIL

S3.02

SCALE: 1 1/2" = 1'-0"