BPR REGION NO	STATE	INTERSTATE PROJECT	STATE PROJECT	COUNTY OR PARISH	FISCAL YEAR	SHEET NO.	TOTAL SHEETS
3	MISS.	I-20-1(64)0		WARREN COUNTY		74	114
6	LA.	I-20-1(64)0	451-09-03	MADISON PARISH			

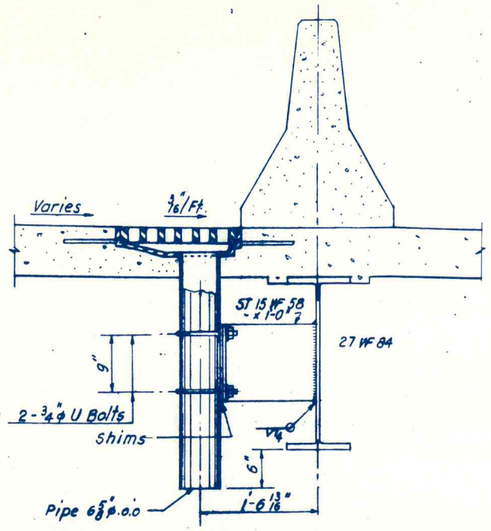

SCUPPER TYPE "B" BETWEEN PIERS W7-W8
Scale: 1" = 1'-0"

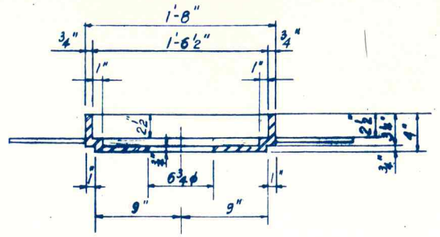

SECTION 4-4

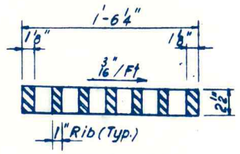

SECTION 5-5

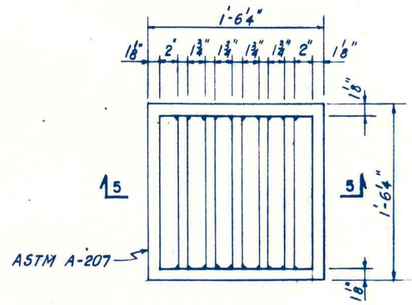

GRATING

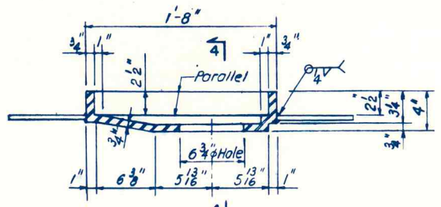

SECTION 3-3

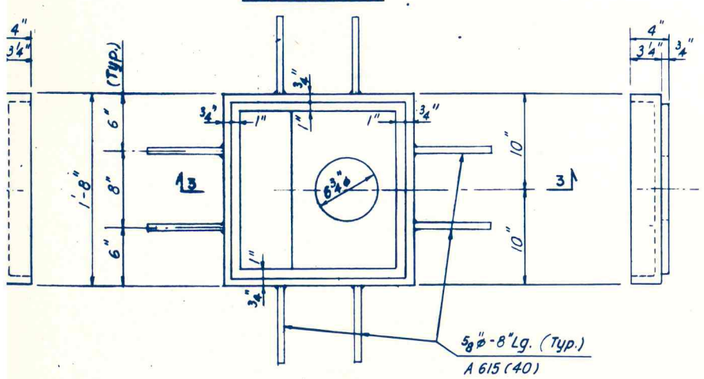

PLAN

SCUPPER TYPE "B"
Scale: 1 1/2" = 1'-0"

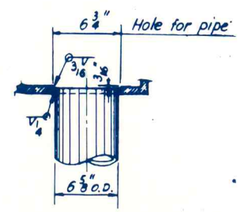

TYPICAL WELD DETAIL
Scale: 1 1/2" = 1'-0"

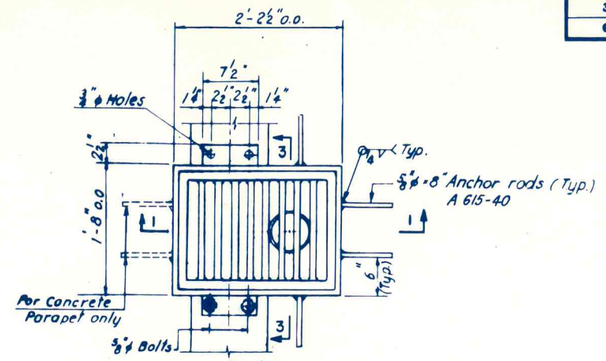

PLAN
Scale: 1" = 1'-0"

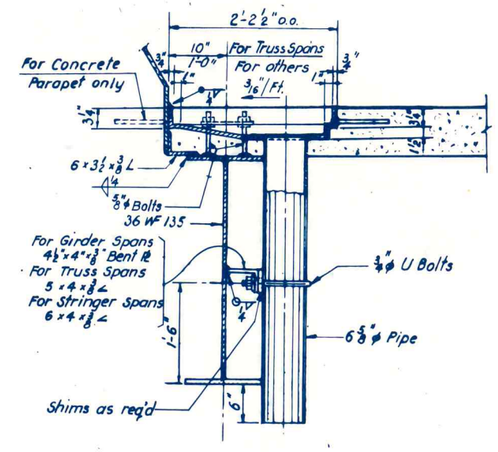

SECTION 1-1
Scale: 1" = 1'-0"

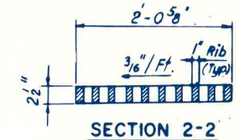

SECTION 2-2
Scale: 1" = 1'-0"

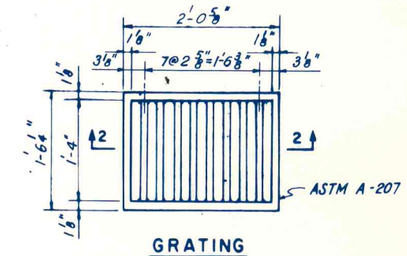

GRATING
Scale: 1" = 1'-0"

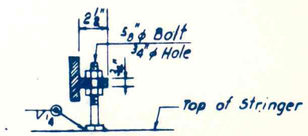

SUPPORT BOLT DETAIL
Scale: 1 1/2" = 1'-0"

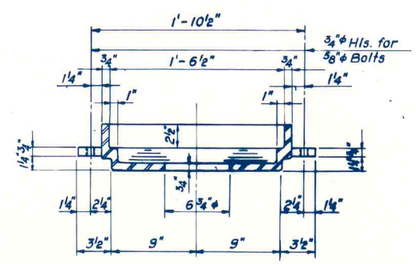

SECTION 3-3
Scale: 1 1/2" = 1'-0"

SCUPPER TYPE "A"

NOTES:

All drain pipe shall be 6" std. wrought iron.
Material for scupper supports and pipe supports shall be structural carbon steel A36.
Scupper frames shall be cast steel A 536 Grade 65-45-12
Gratings shall be wrought iron A 207
Scuppers, pipes and grating shall be hot dipped galvanized. See Special Provisions
No painting required.
The scuppers shall be set true to longitudinal and cross slopes of the roadway.

DATE	DESCRIPTION	BY
	REVISIONS	

MISSISSIPPI STATE HIGHWAY DEPARTMENT
LOUISIANA DEPARTMENT OF HIGHWAYS
MISSISSIPPI RIVER BRIDGE
VICKSBURG, MISSISSIPPI

TYPICAL SCUPPER DETAILS

E. LIONEL PAVLO
ENGINEERING COMPANY
NEW YORK, N. Y.

DATE: April 1969	SCALE: AS SHOWN	DWG. NO. 74
DESIGNED BY:	DRAWN BY: E.W.	CHECKED BY: