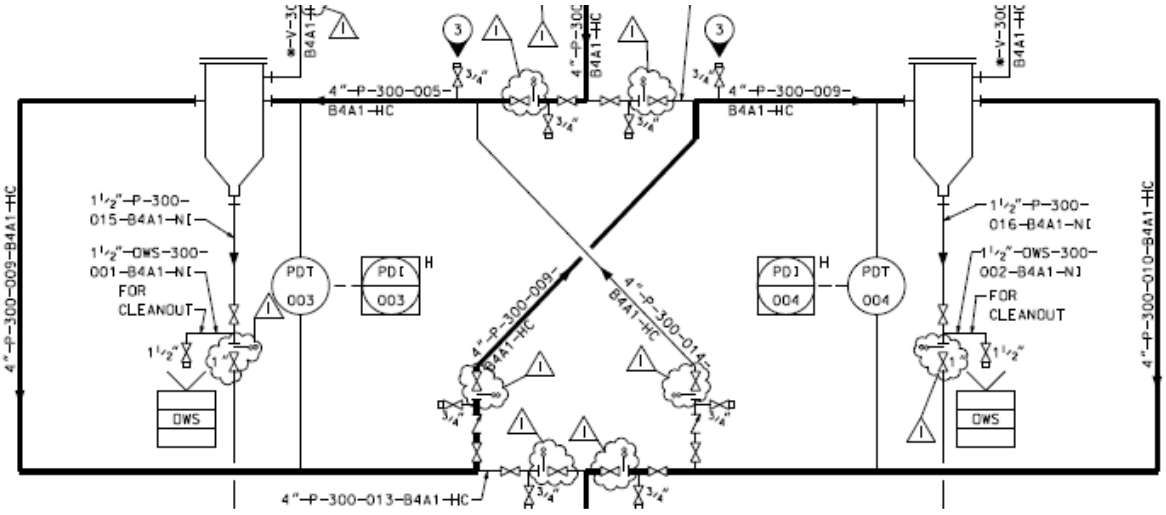
4"-P-300-005-B4A1-HC
4"-P-300-009-B4A1-HC
1½"-P-300-015-B4A1-NI
1½"-OWS-300-001-B4A1-NI
FOR CLEANOUT
PDT 003
PDI 003
PDI 004
PDT 004
1½"-P-300-016-B4A1-NI
1½"-OWS-300-002-B4A1-NI
FOR CLEANOUT
4"-P-300-009-B4A1-HC
4"-P-300-014-B4A1-HC
4"-P-300-009-B4A1-HC
4"-P-300-010-B4A1-HC
4"-P-300-013-B4A1-HC
OWS
OWS

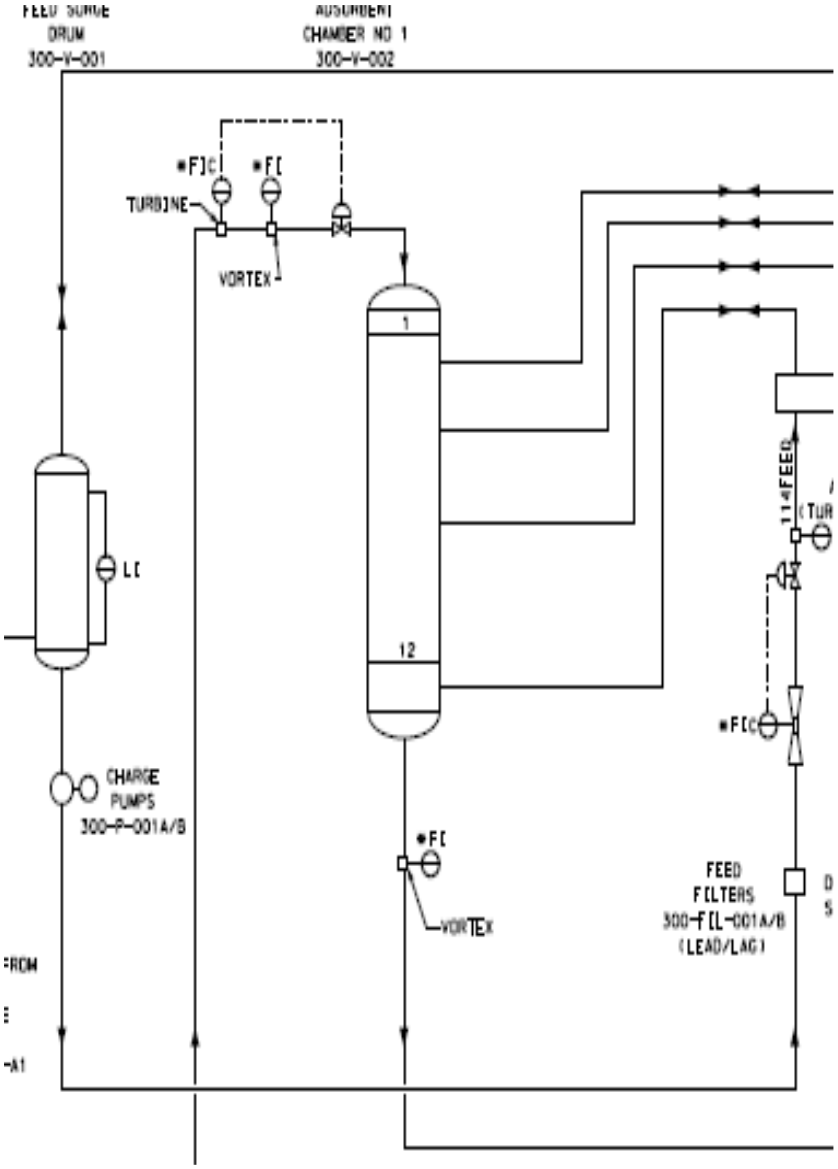
DRUM
300-V-001
CHAMBER NO 1
300-V-002
TURBINE
VORTEX
VORTEX
CHARGE PUMPS
300-P-001A/B
FEED FILTERS
300-FIL-001A/B
(LEAD/LAG)