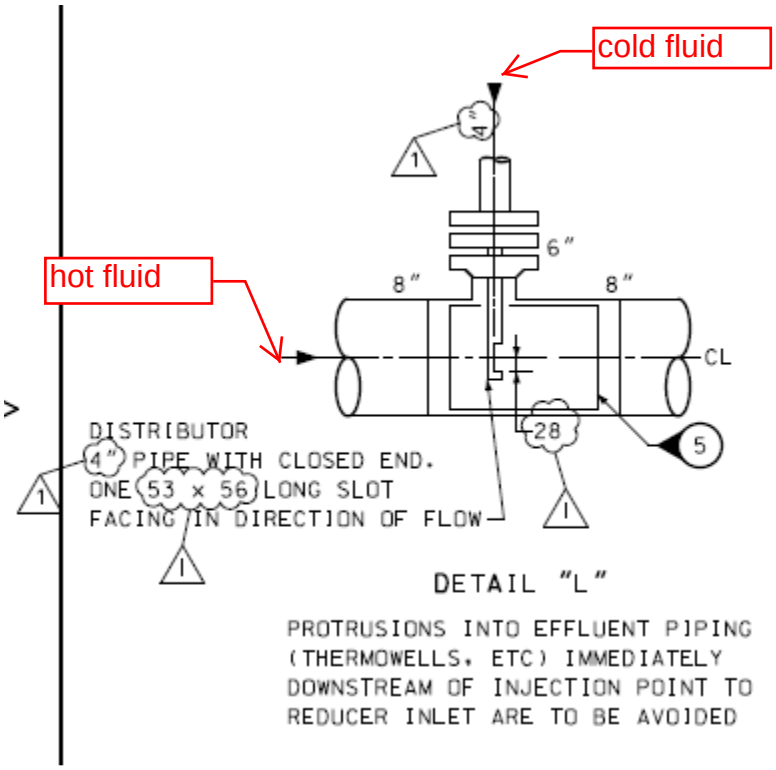
cold fluid
hot fluid
4"
1
6"
8"
8"
CL
28
5
DISTRIBUTOR
4" PIPE WITH CLOSED END.
ONE 53 x 56 LONG SLOT
FACING IN DIRECTION OF FLOW
DETAIL "L"
PROTRUSIONS INTO EFFLUENT PIPING
(THERMOWELLS, ETC) IMMEDIATELY
DOWNSTREAM OF INJECTION POINT TO
REDUCER INLET ARE TO BE AVOIDED

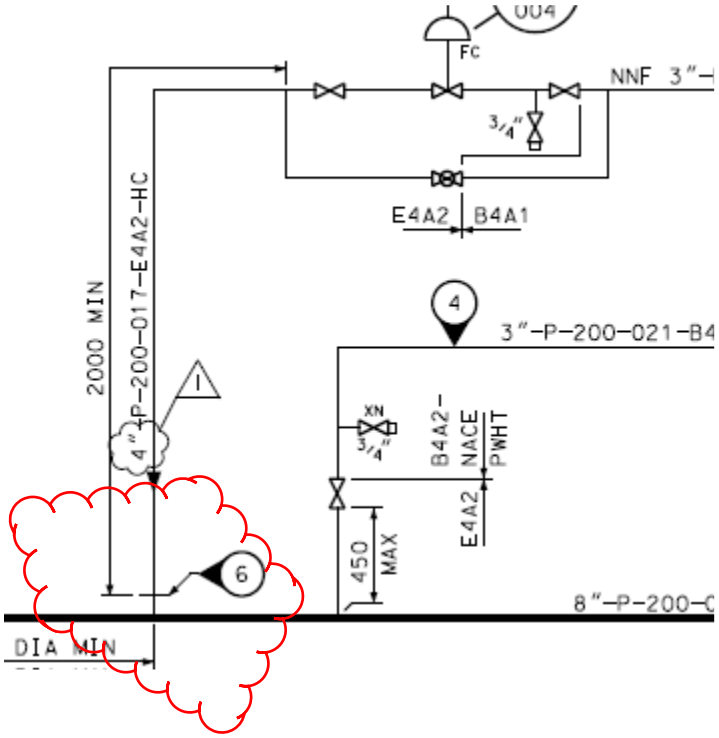
FC
NNF 3"-
3/4"
E4A2
B4A1
4
3"-P-200-021-B4
2000 MIN
4"-P-200-017-E4A2-HC
XN
3/4"
B4A2-
NACE
PWHT
E4A2
450
MAX
6
8"-P-200-C
DIA MIN