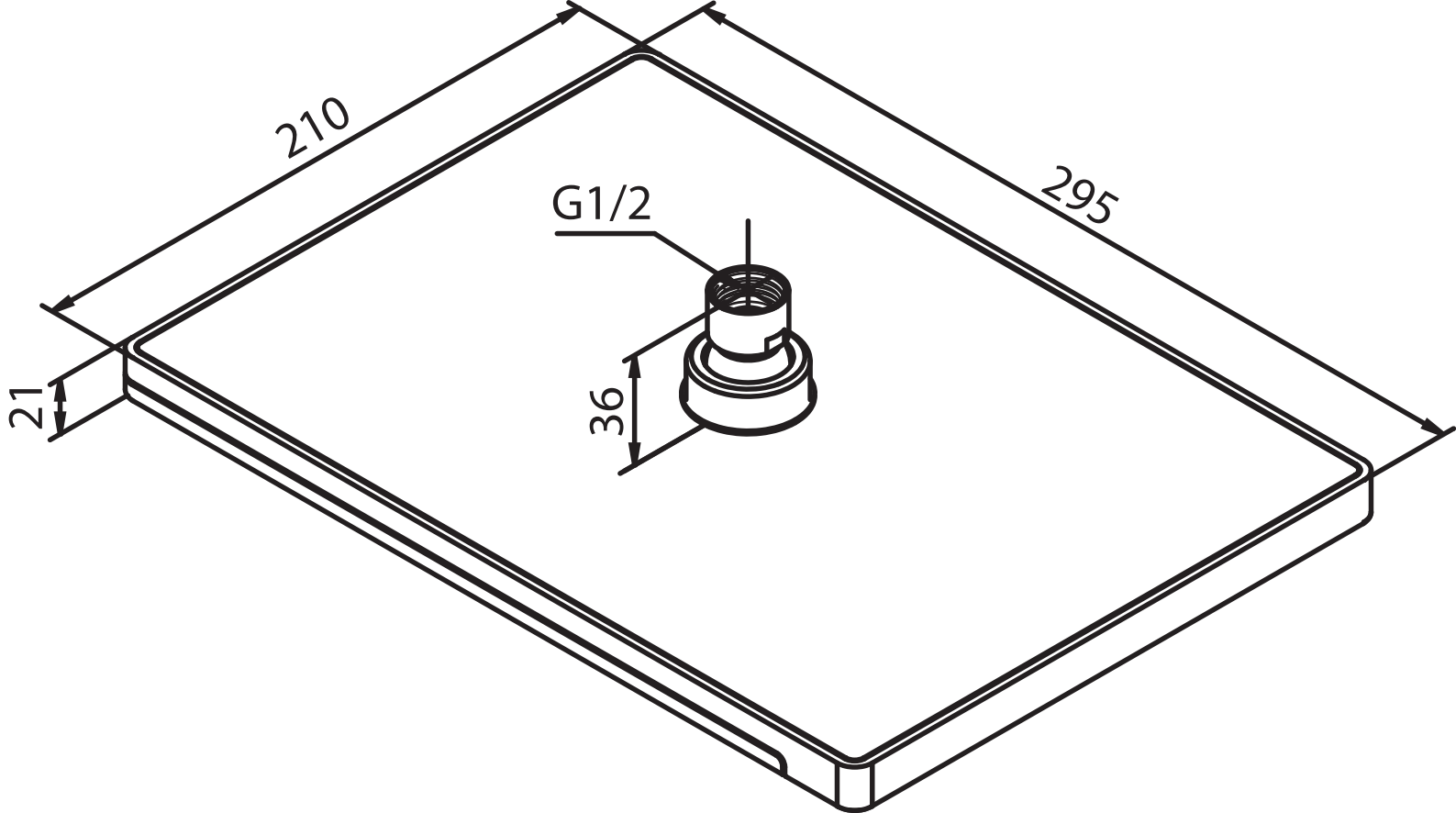
210
295
G1/2
36
21